Existing

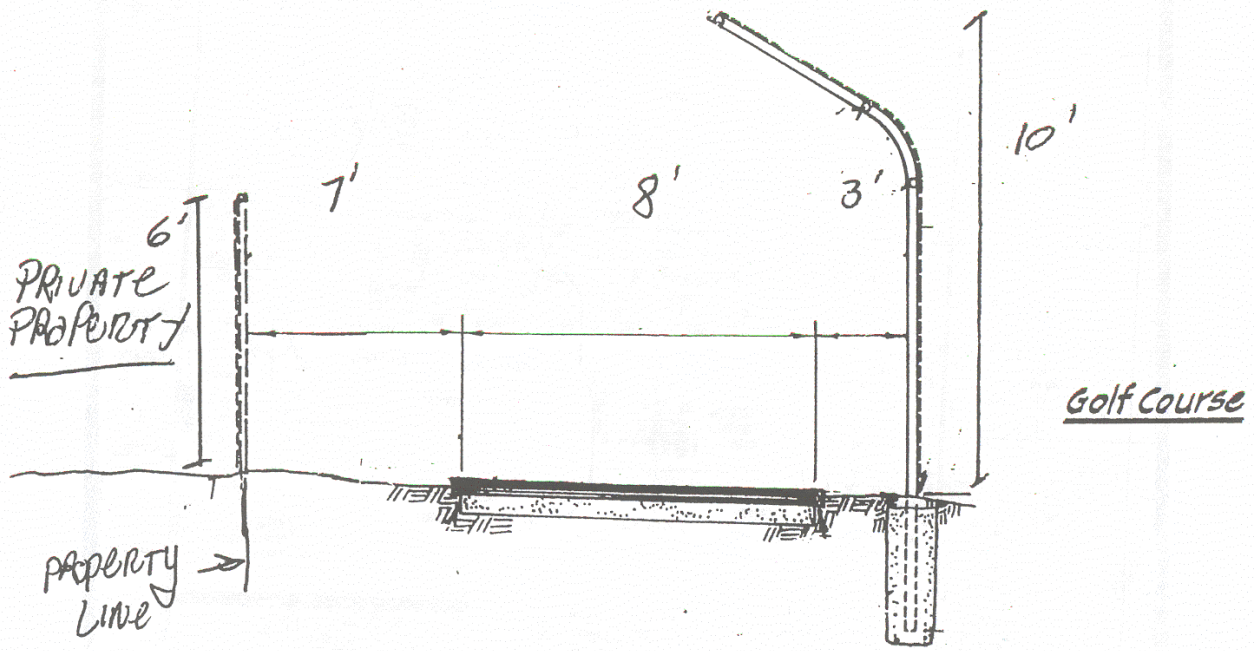
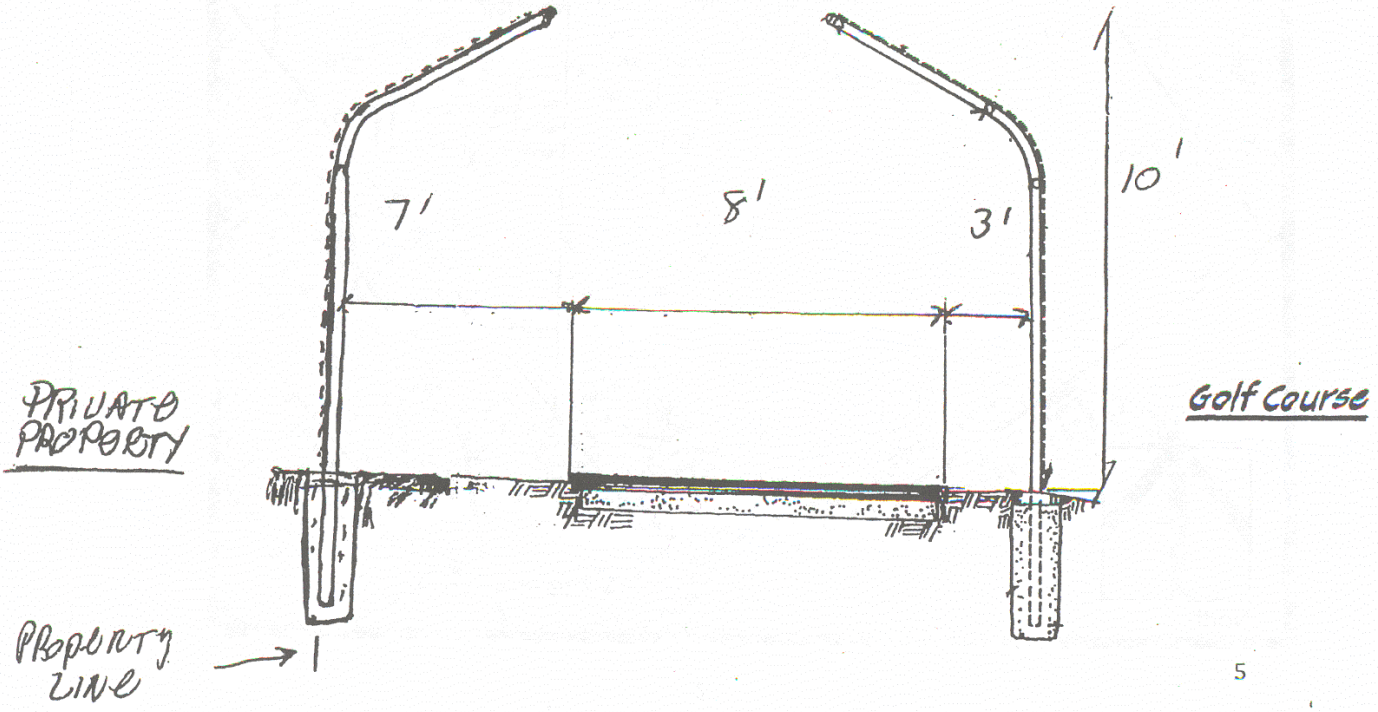
Proposed