EXHIBIT "A1" **DEED NO.** 3607

LEGAL DESCRIPTION OF THE VACATION OF A PORTION OF CORONADO DRIVE, MENDOZA DRIVE AND EL CAMINO DRIVE

Those portions of Coronado Drive, Mendoza Drive, and El Camino Drive, adjacent to Lot 20, Tract No. 5252, in the City of Costa Mesa, County of Orange, State of California, as shown on a map recorded in Book 185, pages 17-20, of Miscellaneous Maps, Records of Orange County, described as follows:

Beginning at the southerly corner of said Lot 20; thence along the existing boundary line of said Lot 20 the following courses: N 60º00'00" W 407.08 feet to a tangent curve, concave northeasterly, having a radius of 25.00 feet; thence northerly 26.18 feet along said curve, through a central angle of 60º00'00" to a tangent line; thence along said tangent line N 00º00'00" E 80.21 feet to a tangent curve, concave southeasterly, having a radius of 15.00 feet; thence northeasterly 23.56 feet along said curve, through a central angle of 90º00'00" to a tangent line; thence along said last mentioned tangent line N 90º00'00" E 535.02 feet to the northeasterly corner of said Lot 20; thence departing said boundary line of Lot 20, northeasterly, along the northeasterly prolongation of the southeasterly line of said Lot 20 N 30º00'00" E 11.55 feet to a point on a line parallel with, and 10 feet northerly of the northerly line of said Lot 20; thence along said parallel line S 90º00'00" W 550.79 feet; thence S 45º00'00" W 21.21 feet to a point on a line parallel with and 10 feet westerly of the westerly line of said Lot 20; thence along said last mentioned parallel line S 00º00'00" W 95.98 feet; thence S 30º00'00" E 25.00 feet to a point on a line parallel with, and 10 feet southwesterly of the southwesterly line of said Lot; thence along said last mentioned parallel line S 60º00'00" E 412.85 feet to a point on the southwesterly prolongation of the southeasterly line of said Lot 20; thence northeasterly along said prolongation N 30º00'00" E 10.00 feet to the point of beginning.

RESERVING THEREFROM a public utility easement for all existing underground and overhead public utilities together with right of ingress and egress for the purpose of maintaining, replacing and upgrading said existing public utilities.

Attached and made a part of is a map designated Exhibit "B1."

REGISTERED PROFESSIONAL ENGINEER
ROBIN B. HAMERS
RCE31720
EXP 12/31/2006
CIVIL
STATE OF CALIFORNIA

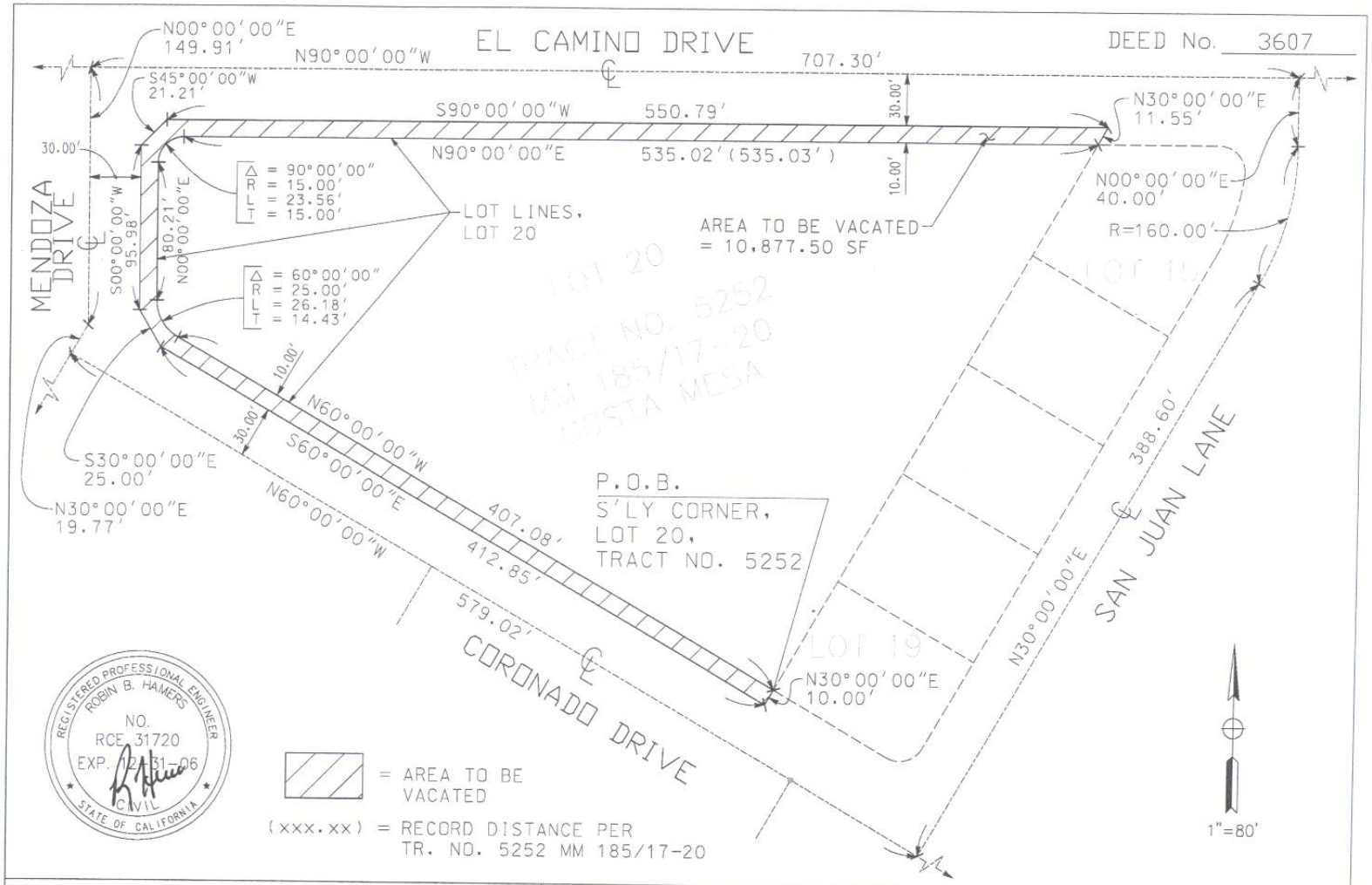

DESCRIPTION: STREETS ADJACENT TO LOT 20, TRACT NO. 5252 MM 185/17-20	STREET VACATION EXHIBIT	SHEET : 1 of 1
APN 141-671-07/17	EXHIBIT "B1"	PREPARED BY: ELJ
		DATE: 06-23-06

EXHIBIT "A2" **DEED NO.** 3607

LEGAL DESCRIPTION OF THE VACATION OF A PORTION OF EL CAMINO DRIVE AND SAN JUAN LANE

Those portions of El Camino Drive and San Juan Lane adjacent to Lot 15, Tract No. 5252, in the City of Costa Mesa, County of Orange, State of California, as shown on a map recorded in Book 185, pages 17-20, of Miscellaneous Maps, Records of Orange County, described as follows:

Beginning at the northwesterly corner of said Lot 15; thence along the northerly line of said Lot 15 N 90°00'00" E 71.29 feet to a tangent curve, concave southwesterly, having a radius of 15.00 feet; thence southeasterly 25.52 feet along said curve through a central angle of 97°29'41" to a non-tangent curve, concave westerly, having a radius of 130.00 feet, at which point a radial line to said curve bears S 82°30'19" E, thence departing said existing boundary of Lot 15, northerly, 11.35 feet, along said curve through a central angle of 5°00'10" to a non-tangent line; thence along said non-tangent line N 43°45'15" W 21.67 feet to a point on a line parallel with and 10 feet northerly of the northerly line of said Lot 15; thence along said parallel line S 90°00'00" W 66.39 feet to a point on a line being the northeasterly prolongation of the northwesterly line of said Lot 15; thence along said prolongation S 30°00'00" W 11.55 feet to the point of beginning.

RESERVING THEREFROM a public utility easement for all existing underground and overhead public utilities together with right of ingress and egress for the purpose of maintaining, replacing and upgrading said existing public utilities.

Attached and made a part of is a map designated Exhibit "B2."

REGISTERED PROFESSIONAL ENGINEER
ROBIN B. HAMERS
RCE31720
EXP 12/31/2006
CIVIL
STATE OF CALIFORNIA

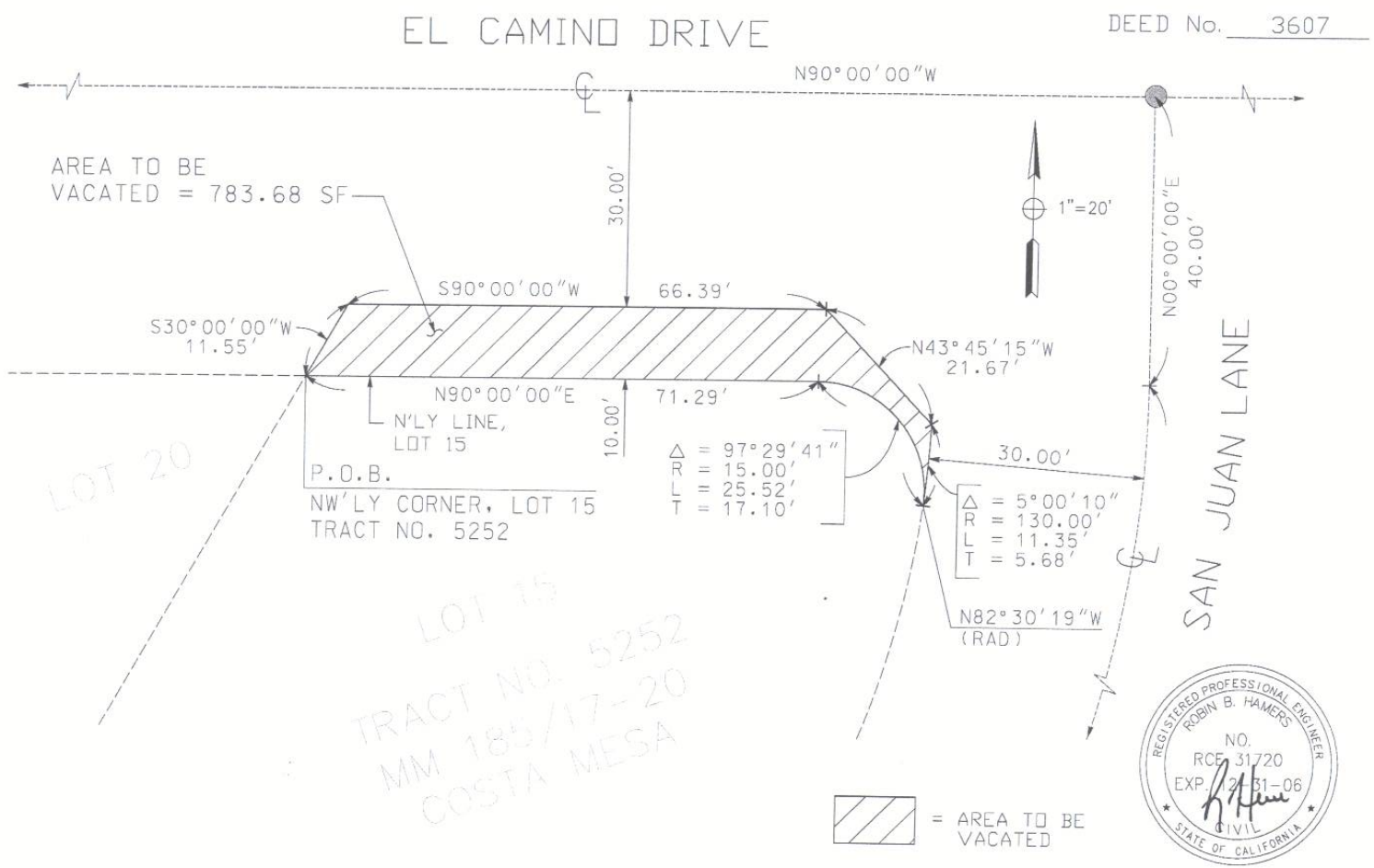

DESCRIPTION: STREETS ADJACENT TO LOT 15, TRACT NO. 5252 MM 185/17-20	STREET VACATION EXHIBIT	SHEET : 1 of 1
APN 141-671-18	EXHIBIT "B2"	PREPARED BY: ELJ
		DATE: 06-23-06

EXHIBIT "A3" **DEED NO.** 3607

LEGAL DESCRIPTION OF THE VACATION OF A PORTION OF CORONADO DRIVE AND SAN JUAN LANE

Those portions of Coronado Drive and San Juan Lane adjacent to Lot 19, Tract No. 5252, in the City of Costa Mesa, County of Orange, State of California, as shown on a map recorded in Book 185, pages 17-20, of Miscellaneous Maps, Records of Orange County, described as follows:

Beginning at the southwesterly corner of said Lot 19; thence along the southwesterly line of said Lot 19 S 60°00'00" E 78.00 feet to a tangent curve, concave northerly, having a radius of 15.00 feet; thence northeasterly 23.56 feet along said curve, through a central angel of 90°00'00" to a non-tangent line; thence departing said existing boundary of Lot 19, along said non-tangent line, S 30°00'00" W 10.00 feet; thence S 75°00'00" W 21.21 feet to a point on a line parallel with and 10 feet southwesterly of the southwesterly line of said Lot 19; thence along said parallel line N 60°00'00" W 78.00 feet to a point on a line being the southwesterly prolongation of the northwesterly line of said Lot 19; thence along said prolongation N 30°00'00" E 10.00 feet to the point of beginning.

RESERVING THEREFROM a public utility easement for all existing underground and overhead public utilities together with right of ingress and egress for the purpose of maintaining, replacing and upgrading said existing public utilities.

Attached and made a part of is a map designated Exhibit "B3."

REGISTERED PROFESSIONAL ENGINEER
ROBIN B. HAMERS
RCE31720
EXP 12/31/2006
CIVIL
STATE OF CALIFORNIA

DEED No. 3607

= AREA TO BE VACATED

REGISTERED PROFESSIONAL ENGINEER
ROBIN B. HAMERS
NO. RCE 31720
EXP. 12-31-06
CIVIL
STATE OF CALIFORNIA

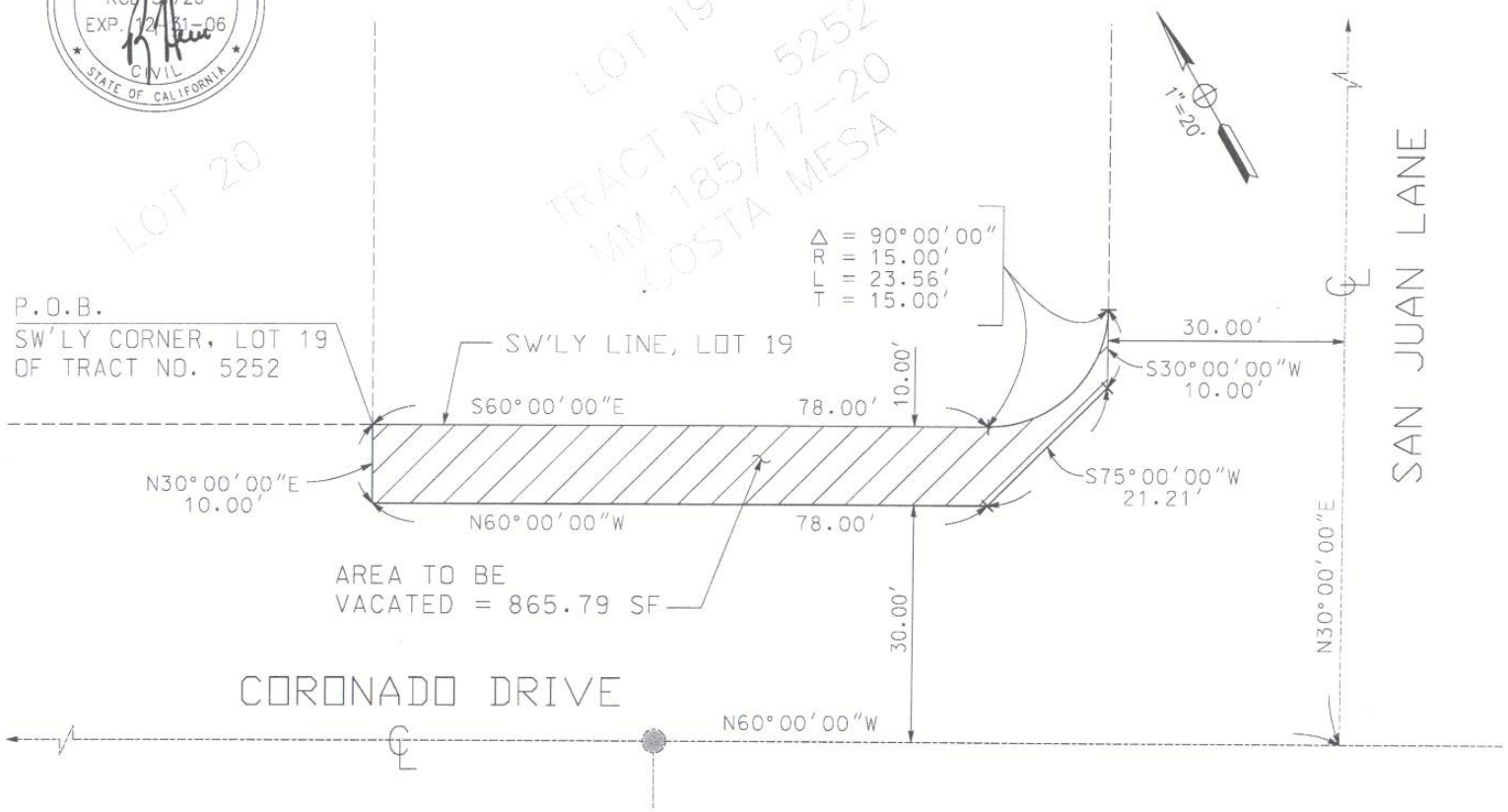

DESCRIPTION: STREETS ADJACENT TO LOT 19, TRACT NO. 5252 MM 185/17-20	STREET VACATION EXHIBIT	SHEET : 1 of 1
APN 141-671-06	EXHIBIT "B3"	PREPARED BY: ELJ
		DATE: 06-23-06