Costa Mesa Building Division

BLOCK WALL*

Masonry Fence Detail & Footings

☐ **PARTY WALL AGREEMENT SIGNED BY NEIGHBOR REQUIRED FOR FOOTING A or B.**

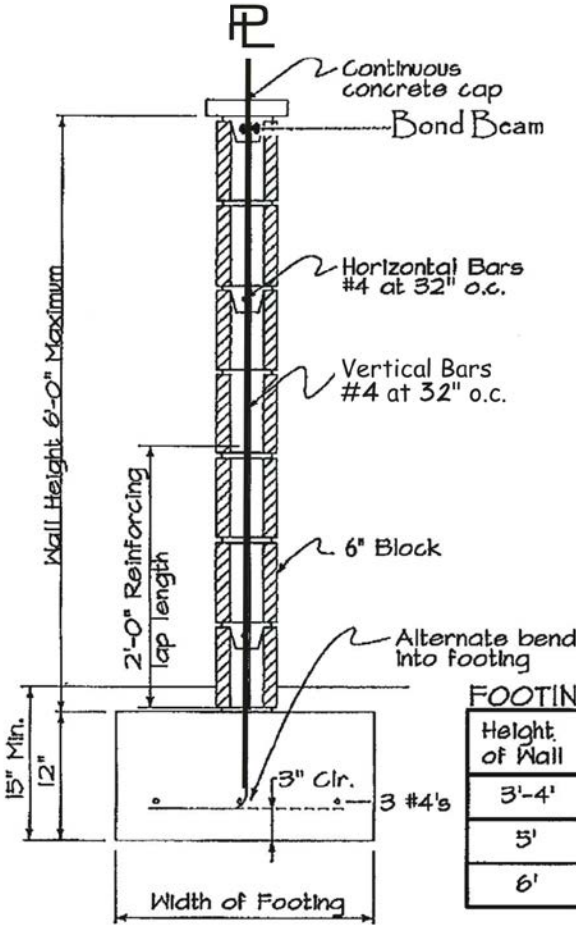

FOOTING A

Height of Wall	Width of Footing
3'-4'	18"
5'	24"
6'	26"

MASONRY FENCE DETAIL & ALTERNATE FOOTING A

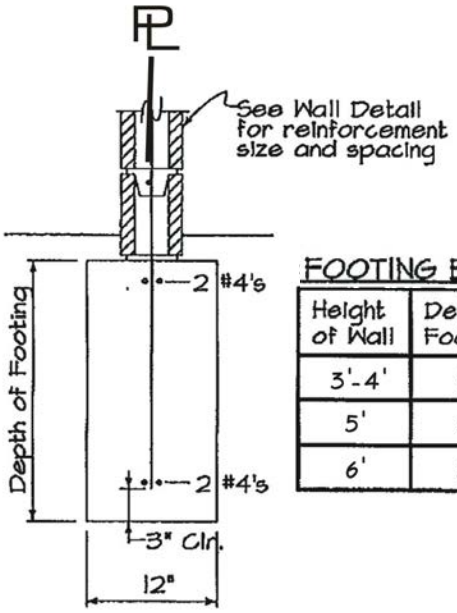

FOOTING B

Height of Wall	Depth of Footing
3'-4'	24"
5'	30"
6'	32"

ALTERNATE FOOTING B

☐ **PARTY WALL AGREEMENT NOT REQUIRED FOR FOOTING C.**

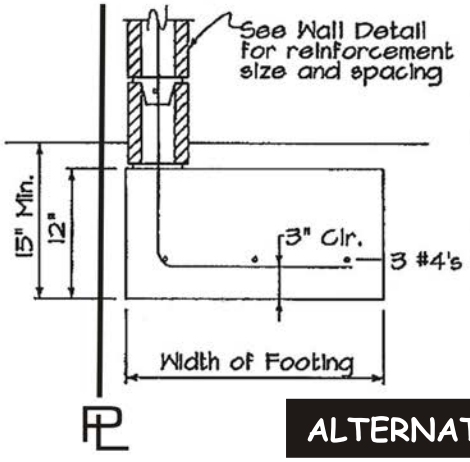

FOOTING C

Height of Wall	Width of Footing
3'-4'	22"
5'	30"
6'	34"

ALTERNATE FOOTING C

*Masonry walls greater than 3 feet in height require a building permit.

GENERAL NOTES

1. Concrete blocks shall be Grade N units.
2. Use F'c = 2500 psi for concrete footing. Type V
3. Reinforcing steel shall be A615 Grade 40 or 60.
4. Fill all cells containing steel with grout, including bond beam.
5. The wall shall be plumb and all block courses shall be level.
6. Reinforcing steel splices shall be a minimum of 24".
7. The first course may be set in fresh concrete for footing.
8. Planning regulates the height, location, and design of the wall based on the zone, location on the property, and design standards. Planning must approve the plans prior to any permit being issued.

Inspections

All walls must have the following inspections. Do not proceed to the next step without approval from your building inspector. Any deviation from the City standard will require an engineer's approval.

1. Footing - Excavation and rebar is complete. No concrete can be placed until the footing is approved.
2. Pre-grout - Block is placed and rebar placement is complete. No grout until approved.
3. Final - Wall is grouted and all construction debris is cleaned from the site. Gates must be installed for final if the wall is a pool barrier.

COSTA MESA BUILDING DIVISION

MASONRY PILASTER

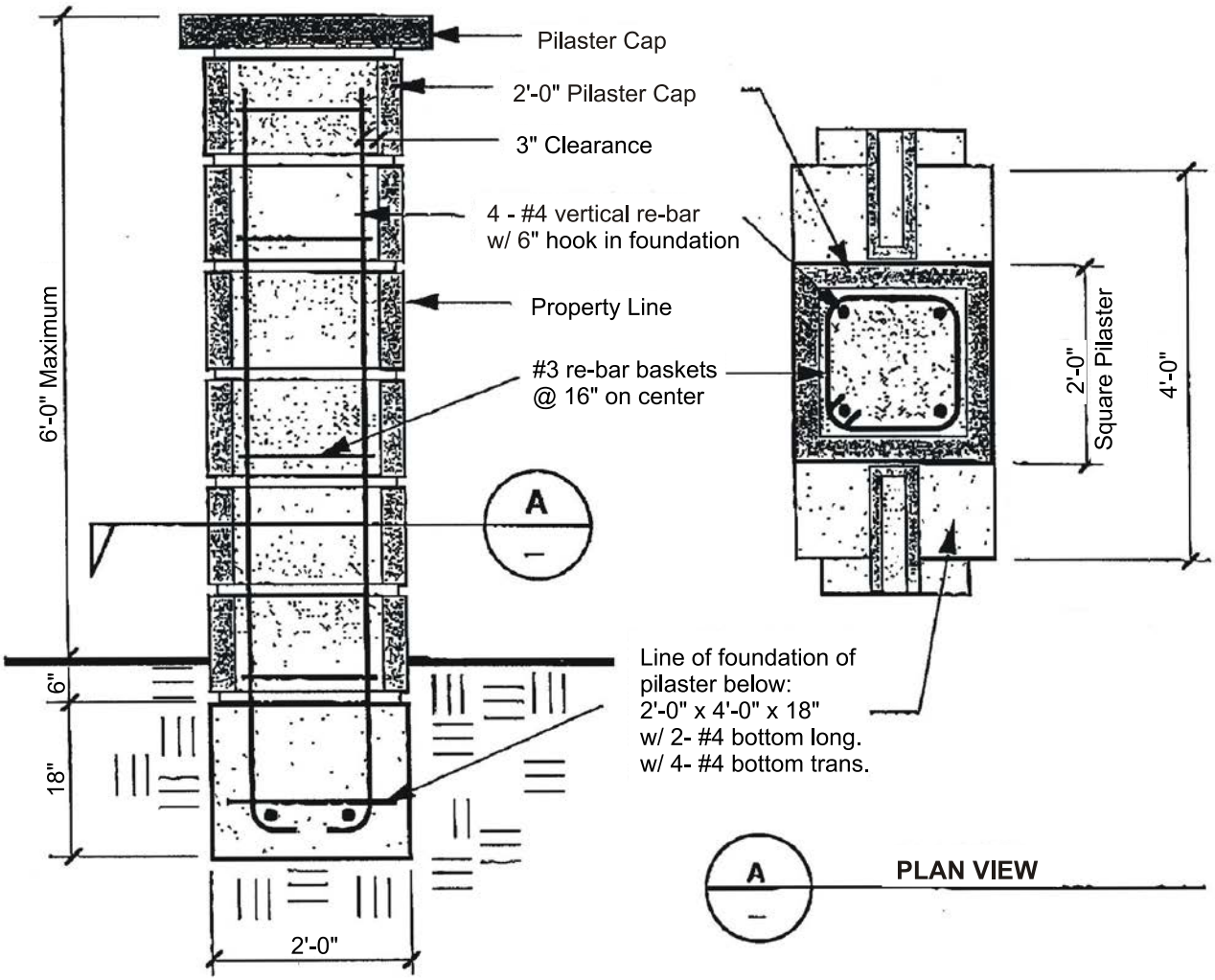

Notes:

1. All cells shall be filled with grout.