City of Costa Mesa
Inter Office Memorandum

TO: CITY COUNCIL, PLANNING COMMISSION

CC: TAMARA LETOURNEAU, BARRY CURTIS, AND JENNIFER LE

FROM: WILLA BOUWENS-KILLEEN, ZONING ADMINISTRATOR

DATE: DECEMBER 6, 2018

SUBJECT: ZONING ADMINISTRATOR DECISION(S)

This is to advise you of the following decision(s) made by the Zoning Administrator within the last week. Project descriptions have been kept brief for this notice. Please feel free to contact me by e-mail at willa.bouwens-killeen@costamesaca.gov if you have any questions or would like further details.

The following five minor conditional use permits are for the same type of request and, therefore, are discussed within the same staff report:

ZA-18-12 **1087 BAKER STREET**

ZA-18-13 **3333 SUSAN STREET**

ZA-18-14 **1055 EL CAMINO DRIVE**

ZA-18-15 **981 PRESIDO DRIVE**

ZA-18-42 **2850 FAIRVIEW ROAD**

Minor conditional use permit to install a small cell network on top of a Southern California Edison streetlight pole within 500 feet of a residential zone. The facility meets the small cell design guidelines and is not in direct view of living areas per CMMC 19(c)(2). It will require the removal and replacement of the existing pole and installation of an underground utility pull box for fiber and power to the new pole.

All five approved, subject to conditions.

Comments received: 7 against for ZA-18-13 and 1 each for ZA-18-15 and ZA-18-42. None for ZA-18-12 or ZA-18-14.

ZA-18-50 **1908 POMONA AVENUE**

Minor Conditional Use Permit ZA-18-50 to amend Conditional Use Permit PA-87-09 for a deviation from shared parking requirements

to allow storage within two-car garages that were calculated towards the parking requirement for the existing commercial office development. The properties contain two identical office buildings with eight individual two-car garages located below the office space. Office uses include small, incubator businesses with limited employees and little or no customer traffic. Approval of this request would allow storage in the garages; storage is currently prohibited. Outdoor storage is prohibited and is not proposed as a part of this application.

Approved, subject to conditions.

Comments received: None

COLGAN, JULIE

From: zhongshu qin <qinzhongshu2012@gmail.com>
Sent: Thursday, November 29, 2018 8:57 PM
To: GENIS, SANDRA; MANSOOR, ALLAN; FOLEY, KATRINA; RIGHEIMER, JIM; STEPHENS, JOHN; HAUSER, JANET; CITY COUNCIL; PLANNING COMMISSION
Subject: *Time Sensitive* Reject Conditional Use Permit That Will Install Potentially Harmful Small Cell Network on 3333 Susan Street

Dear Sir/Madam,

I am the homeowner in Providence Park. Our small private community (Providence Park) is suddenly and imminently under threat from a potential cancer-causing and health-harming device, called a small-cell base station. Our Providence Park homes are located directly across 3333 Susan Street in Costa Mesa, the site of the proposed cell station.

The decion will be made on December 6, 2018 to **install a small cell network on top of a SoCal Edison streetlight pole at 3333 Susan Street, which is within 500 feet from our residential community. The pole is actuallly closer to 50 feet in front of our front gate.** It is very concering that such an installing of a small cell network will happen, since recent and ongoing reports about the **harmful rediation that such small cell networks or towers can inflict upon human health are all over the internet**.

Please do all three of the items listed below:

1. Costa Mesa City Council **PREVENT** the application for the Conditional Use Permit from moving forward
2. Costa Mesa City Council Enact an Emergency Ordinance. Please place this issue on your agenda and issue an emergency ordinance to stop this installation should the decision on December 5 allow such the network in stallation
3. The application (Franklin Orozco for AT&T) must submit a detailed report regardin the RF emissions of such proposed cell station, even though health risks are usually downplayed at the expense and health of residents

Thank you in advance for your concideration.

Best Regards,
Concerned Homeowner, Providence Park, Costa Mesa

COLGAN, JULIE

Subject: Reject Conditional Use Permit That Will Install Potentially Harmful Small Cell Network on 3333 Susan Street

From: cathy kwok [mailto:cxl6060@gmail.com]
Sent: Friday, November 30, 2018 1:26 AM
To: FOLEY, KATRINA <KATRINA.FOLEY@costamesaca.gov>; RIGHEIMER, JIM <JIM.RIGHEIMER@costamesaca.gov>; STEPHENS, JOHN <JOHN.STEPHENS@costamesaca.gov>; HAUSER, JANET <JANET.HAUSER@costamesaca.gov>; CITY COUNCIL <CITYCOUNCIL@ci.costa-mesa.ca.us>
Subject: Fwd: Reject Conditional Use Permit That Will Install Potentially Harmful Small Cell Network on 3333 Susan Street

Dear Sir/Madam,

I am the homeowner in Providence Park. Our small private community (Providence Park) is suddenly and imminently under threat from a potential cancer-causing and health-harming device, called a small-cell base station. Our Providence Park homes are located directly across 3333 Susan Street in Costa Mesa, the site of the proposed cell station.

The decion will be made on December 6, 2018 to **install a small cell network on top of a SoCal Edison streetlight pole at 3333 Susan Street, which is within 500 feet from our residential community. The pole is actuallly closer to 50 feet in front of our front gate.** It is very concering that such an installing of a small cell network will happen, since recent and ongoing reports about the **harmful rediation that such small cell networks or towers can inflict upon human health are all over the internet**.

Please do all three of the items listed below:
1. Costa Mesa City Council **PREVENT** the application for the Conditional Use Permit from moving forward
2. Costa Mesa City Council Enact an Emergency Ordinance. Please place this issue on your agenda and issue an emergency ordinance to stop this installation should the decision on December 5 allow such the network in stallation
3. The application (Franklin Orozco for AT&T) must submit a detailed report regardin the RF emissions of such proposed cell station, even though health risks are usually downplayed at the expense and health of residents

Thank you in advance for your concideration.

Best Regards,
Concerned Homeowner, Providence Park, Costa Mesa

COLGAN, JULIE

From: Peter H. Mach <pmach@westernu.edu>
Sent: Saturday, December 01, 2018 3:00 PM
To: PLANNING COMMISSION
Subject: *Time Sensitive* action needed by Dec 4 2018

Attn: Asst. Planner, Planning Division, 77 Fair Dr, Costa Mesa 92626

As a concerned resident and homeowner of Providence Park community on Susan street, I am requesting that the Planning Commission reject the Conditional Use Permit that will install harmful small cell network/tower (close proximity microwave radiation) on 3333 Susan Street.

Request:

1. That Costa Mesa City Council Prevent the Application for the Conditional Use Permit from moving forward.
2. That Costa Mesa City Council enacts an Emergency Ordinance - request them to place this issue on their agenda and issue an emergency ordinance to stop this installation should the decision on Dec 6 allow such the network installation.
3. The applicant (Franklin Orozco for AT&T) must submit a detailed report regarding the RF emissions of such proposed cell station, even though health risks are usually downplayed at the expense and health of residents.

Thank you,
Peter Mach
Costa Mesa resident
1324 Corte Maltera, Costa Mesa, 92626

Time Sensitive Reject Conditional Use Permit That Will Install Potentially Harmful Small Cell Network on 3333 Susan Street

Dear Sir/Madam,

I am the homeowner in Providence Park. Our small private community (Providence Park) is suddenly and imminently under threat from a potential cancer-causing and health-harming device, called a small-cell base station. Our Providence Park homes are located directly across 3333 Susan Street in Costa Mesa, the site of the proposed cell station.

The decision will be made on December 6, 2018 to **install a small cell network on top of a SoCal Edison streetlight pole at 3333 Susan Street, which is within 500 feet from our residential community. The pole is actually closer to 50 feet in front of our front gate.** It is very concerning that such an installing of a small cell network will happen, since recent and ongoing reports about the **harmful radiation that such small cell networks or towers can inflict upon human health are all over the internet**.

Please do all three of the items listed below:
1. Costa Mesa City Council **PREVENT** the application for the Conditional Use Permit from moving forward
2. Costa Mesa City Council Enact an Emergency Ordinance. Please place this issue on your agenda and issue an emergency ordinance to stop this installation should the decision on December 5 allow such the network installation
3. The application (Franklin Orozco for AT&T) must submit a detailed report regarding the RF emissions of such proposed cell station, even though health risks are usually downplayed at the expense and health of residents

Thank you in advance for your consideration.

Best Regards,
Concerned Homeowner, Providence Park, Costa Mesa

Received
City of Costa Mesa
Development Services Department

DEC 04 2018

COLGAN, JULIE

Subject: Time sensitive- action needed by December 6, 2018

From: gwenyth thomas [mailto:gwenytht@me.com]
Sent: Friday, November 30, 2018 8:40 PM
To: CITY COUNCIL <CITYCOUNCIL@ci.costa-mesa.ca.us>
Cc: Gwenyth Benaim <gwenytht@mac.com>
Subject: Time sensitive- action needed by December 6, 2018

My name is Gwenyth Benaim and I am a resident of Providence Park at 1308 Corte Venosa, Costa Mesa, CA, 92626. There is a hearing on December 4th regarding a decision to be made on December 6, 2018 about a conditional use permit by Frank Orozco for AT&T to install a small cell tower at 3333 Susan Street, directly across from a residential community.

I am urging the Costa Mesa City Council to **prevent** the the approval of the permit;
to enact an emergency ordinance to stop the installation in the event that the application is approved on December 6, 2018;
and to request that the applicant (Frank Orozco for AT&T) submit a detailed report regarding the potential risks of RF emissions of such proposed cell station of local residents.

I live across the street from the proposed tower; I have a two year old child on one on the way. There are also many other children in the community and I am extremely concerned about the potential risks involved with living near a small cell tower, for myself, for the other residents, and especially for the children. I strongly oppose the installation of the cell tower.

Studies have shown an increase in neurobehavioral symptoms and cancer in populations living less than 500 meters from current mobile phone base stations (https://www.westonaprice.org/health-topics/environmental-toxins/microwave-radiation-coming-lamppost-near/).

Thank you for your consideration.

Sincerely,
Gwenyth Benaim

1308 Corte Venosa
Costa Mesa,
CA. 92626
(503)704-4009

AGLUPOS, JOHNWILLY

From: michael sprake <mikesprake@gmail.com>
Sent: Wednesday, November 28, 2018 5:17 PM
To: AGLUPOS, JOHNWILLY
Subject: 981 Presidio Drive, small cell network.

Hi John,

Thank you for taking my call earlier. To clarify I am the home owner and reside at 987 Presidio Drive next door to the proposed "installation of a small cell network". Application # ZA-18-15.

I am requesting a copy of the RF Study that has been done for the 4G cell that is to be installed.
I would also like to see exactly what the approved design is for the actual new pole and cell, the design guideline.

Please note that there are 2 story buildings nearby that possibly align with the height of the radiation from this cell.
Also to note that this from my point of view, is not a "minor conditional use" change it is transforming a pole which is for street lighting into a transmitting 4G cell.

I am also glad to hear that you will propose for a RF measurement to be made after the installation is completed.

Really appreciate your help with this issue,

Yours Sincerely,

Mike Sprake.

COLGAN, JULIE

From: Attn Chris <chris888@gmx.com>
Sent: Thursday, December 06, 2018 12:58 PM
To: PLANNING COMMISSION; WOODS, CARLA N.
Subject: I OPPOSE small cell network pole at 3333 Susan Street

I live across 3333 Susan Street and was just made aware TODAY of the structure that may get a cell network attached to it.

My neighbors and I OPPOSE this decision.

However, I do not know or understand the process to oppose it.

Are you making the decision today? How do we appeal it?

This will bring property values down and we have no info regarding health risks.

Please advise as to next steps. Thank you.

PUBLIC COMMENT

LETTER FROM COSTA MESA RESIDENTS REJECTING SMALL CELL NETWORK

Date: Sun, Dec 2, 2018
From: Residents / Providence Park
To: Costa Mesa Planning Commission, 77 Fair Drive, Costa Mesa CA 92626

WHAT: *Reject* Conditional Use Permit That Will Install Potentially Harmful Small Cell Network/Tower [Close Proximity Microwave Radiation] on 3333 Susan Street, Costa Mesa

Dear Chief and Assistant Planners of the Costa Mesa Planning Commission.:

Our small private community (Providence Park) is suddenly and imminently under threat from a potential cancer-causing and property-devaluing device, called a small base station/network. Our Providence Park homes are located directly across 3333 Susan Street in Costa Mesa, the site of the proposed cell station. Most residents have suddenly received, and without adequate advance notice, a postcard mailing on Nov. On Nov. 23 2018 from the Costa Mesa Planning Commission that a decision will be made on Dec. 6 2018 to **install a small cell network on top of a SoCal Edison streetlight pole at 3333 Susan St which is within 500 feet from our residential community**. A copy of the postcard mailing is attached. The pole in question is so marked on the curb at 3333 Susan Street.

It is very concerning that an installation of such a small cell network may/will happen, since recent and ongoing reports about the **harmful radiation that such small cell networks or towers can inflict upon human health, small children and pets** are increasingly in the news.

It will also devalue property values ... please read this recent study:
real-estate-survey-results-cellgrid-towers-impact-propertys-desirability.

WHAT MAY HAPPEN TO PUBLIC HEALTH IF SMALL CELLS ALLOWED

From a recent online article, section-edited, link to full article and its source material below this text.

Community Health Risks

" ... There are now thousands of scientific studies documenting myriad adverse bioeffects of microwave radiation, in particular. These biological effects include cancer, DNA damage, cardiovascular problems, increased stress hormones, sleeping disorders, depression, headaches, irritability and impaired fertility.

... **Ubiquitous deployment of small cell antennas will unleash unnatural and round-the-clock millimeter microwave radiation that is far more potent than anything previously experienced from the electromagnetic spectrum**.

Studies already show a substantially increased prevalence of neurobehavioral symptoms and cancer in populations living less than five hundred meters from current mobile phone base stations. What will happen when clusters of powerful small cell antennas are sited within feet of everyone, everywhere? Retired U.S. government physicist Dr. Ronald Powell cautioned in a letter to the FCC that 5G would "irradiate everyone, including the most vulnerable to harm from radiofrequency radiation: pregnant women, unborn children, young children, teenagers, men of reproductive age, the elderly, the disabled, and the chronically ill." 5G's proponents apparently are heedless of Dr. Powell's objections .... warnings that numerous other countries—but not the U.S.—have taken seriously. The upshot is that many Americans will no longer be safe in their own homes, particularly in the urban areas where 5G technology will be rolled out first.

Link to article: www.westonaprice.org/health-topics/environmental-toxins/microwave-radiation-coming-lamppost-near/

CLOSER + CALL TO ACTION

It is highly urged you reject or prevent the application for the conditional use permit from moving forward, in regards to the installation of the Close Proximity Small Cell Network at 3333 Susan Street. Moreover, a moratorium of other small cell networks in Costa Mesa should be issued to allow families, experts and councils to get updated on such installations and to consider other options. This will give carriers time to reconsider safer alternatives in residential areas such as installing more fiber in these communities and for the council to implement a solid Costa Mesa ordinance to regulate the ramp-up to 5G, while at the same time protecting the health and safety of Costa Mesa residents.

Thank you in advance for your consideration.

Costa Mesa Residents, Providence Park, Costa Mesa

Received
City of Costa Mesa
Development Services Department

DEC 06 2018

NOTICE OF A ZONING ADMINISTRATOR DECISION DATE

The Costa Mesa Zoning Administrator will make a decision regarding the following application:

DECISION DATE:	December 6, 2018	**City Hall Address:** *(No meeting required.)*	City Hall 77 Fair Drive Costa Mesa, CA 92626
Application No.	ZA-18-13	**Applicant:**	Franklin Orozco for AT&T / Ericsson
Site Address:	3333 Susan Street	**Zone:**	Public Right-of-Way
Contact:	Planning Division (714) 754-5245	**Email:**	PlanningCommission@costamesaca.gov
Website:	www.costamesaca.gov		

Description: Minor conditional use permit to install a small cell network on top of a Southern California Edison streetlight pole within 500 feet of a residential zone. The facility meets the small cell design guidelines and is not in direct view of living areas per CMMC 19-15 (c)(2). It will require the removal and replacement of the existing pole and installation of an underground utility pull box for fiber and power to the new pole.

Environmental Determination: The project is categorically exempt from the provisions of the California Environmental Quality Act (CEQA) under CEQA Guidelines Section 15301 (Class 1), Existing Facilities.

Public Comments: There will be **no public hearing** on this request. Any written comments must be received by the Planning Division prior to the decision date (see above). The decision letter (and any related conceptual plans, as applicable) can be downloaded from the City's website following the decision date at: http://www.costamesaca.gov/index.aspx?page=940 If you challenge this action in court, you may be limited to raising only those issues you, or someone else raised, prior to the decision date.

COLGAN, JULIE

From: Will Wagner <wowagner2015@yahoo.com>
Sent: Sunday, November 25, 2018 4:32 AM
To: PLANNING COMMISSION
Subject: Open letter regarding AT&T / Ericsson cell network upgrade @ 2850 Fairview Rd.

Follow Up Flag: Follow up
Flag Status: Flagged

Hello,

I am writing in regards to the notice of the Costa Mesa zoning administrator application No ZA-18-42.

We are concerned that this notice doesn't provide enough information regarding AT&T cell network upgrade. Public needs to know if AT&T is upgrading to 5G network or it's just some other upgrades. If it's 5G upgrade then neighborhood should be notified.
Please read this and numerous other articles regarding health risk of 5G technology:
Frightening Frequencies: The Dangers of 5G & What You Can Do About Them - Eluxe Magazine

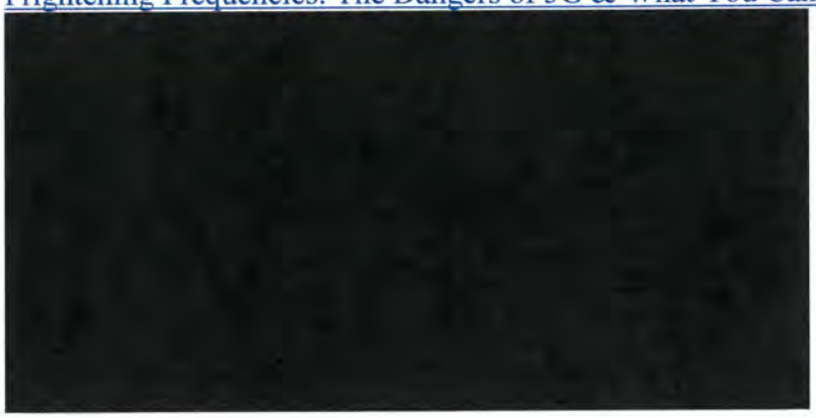

Frightening Frequencies: The Dangers of 5G & What You Can Do About Them - Eluxe Magazine

Dangers of 5G technology, 5G radiation dangers, smart meter dangers, dangers of internet of things, why you should avoid 5g, how to fight 5g, 5g wifi risks

My community is less then 500 feet from 2850 Fairview Rd. and we are extremely concerned if AT&T is planning 5G upgrade.

Thank you for your understanding,
Will Wagner and neighbors
(310)270-5533

CITY OF COSTA MESA

P.O. BOX 1200 • 77 FAIR DRIVE • CALIFORNIA 92628-1200

DEVELOPMENT SERVICES DEPARTMENT

December 6, 2018

Franklin Orozco
1387 Calle Avanzado
San Clemente, CA 92673

RE: ZONING APPLICATIONS ZA-18-12, ZA-18-13, ZA-18-14, ZA-18-15, ZA-18-42 MINOR CONDITIONAL USE PERMIT TO INSTALL A SMALL CELL FACILITY ON TOP OF A STREETLIGHT POLE 1087 BAKER STREET; 3333 SUSAN STREET; 1055 EL CAMINO DRIVE; 981 PRESIDIO DRIVE; AND 2850 FAIRVIEW ROAD, COSTA MESA

Dear Mr. Orozco:

City staff's review of your zoning applications for the above-referenced projects has been completed. The applications, as described in the attached project description, have been approved, based on the findings and subject to the conditions of approval and code requirements (attached). The decision will become final at 5:00 p.m. on December 13, 2018, unless appealed by an affected party, including filing of the necessary application and payment of the appropriate fee, or called up for review by a member of the Planning Commission or City Council.

If you have any questions regarding this letter, please feel free to contact the project planner, Johnwilly Aglupos, at either johnwilly.aglupos@costamesaca.gov or 714.754.5692.

Sincerely,

WILLA BOUWENS-KILLEEN, AICP
Zoning Administrator

Per each Attachment 1-5: Intent Letter, SCE consent letter, SCE Letter of Authorization, Disconnect Letter, SCE Streetlight Authorization Form, FCC, CPUC, Rendering, Plans

cc: Engineering
Transportation

PROJECT DESCRIPTION

The telecommunication industry is in constant growth and expansion. This includes an introduction of "Small Cell" facilities placed on light poles, traffic signals, or on new poles within the public right-of-way to support increased demand and capacity. "Small Cell" facilities (also referred to as "nodes") are a lower-power facility that will complement and supplement broader macro cell facilities, filling gaps in coverage from the macro facilities. To that end, the applicant requests approval of five minor conditional use permits (MCUP) to install a small cell facility on top of five Southern California Edison (SCE) streetlight poles within the public right-of-way and adjacent to the following locations:

Application Number	Address
ZA-18-12	1087 Baker Street
ZA-18-13	3333 Susan Street
ZA-18-14	1055 El Camino Drive
ZA-18-15	981 Presidio Drive
ZA-18-42	2850 Fairview Road

Pursuant to Municipal Code Title 19, Section 19-15(c)(2), a minor conditional use permit is required to establish and operate a wireless communication facility within the public right-of-way if: (a) the antenna or any supporting equipment is not integrated with and screened by the proposed structure as illustrated in the design guidelines, (b) the facility requires an above ground cabinet / equipment, or (c) the facility is located within a five hundred (500) foot radius of a residential zone. A Minor Conditional Use Permit is required because all five locations are within a 500-foot radius of a residential zone; each of the five locations will satisfy all other development standards.

ANALYSIS

The existing and replacement streetlight poles are owned by SCE. The SCE design criteria dictates the height and material of the replacement poles while the supporting small cell equipment varies in size and location in accordance to the carrier's technology (see Table 1 below; the table applies to all 5 applications). The applicant has provided an SCE letter of authorization regarding the approved Carrier's preliminary plans. Per U.S.C. 332(c)(7)(B)(i)(II), the city may not regulate the placement, construction or modification of wireless service facilities in a manner that prohibits the provision of personal wireless services; however, the law does not prohibit local government from asking the applicant to provide a design that allows for a compatible and harmonious relationship between the proposed facility and the surrounding area.

TABLE 1			
Comparison			
	Existing Poles	Proposed Poles	City Requirement
Diameter (Shroud)	N/A	14.0"	Design Guidelines
Diameter (Pole)	Varies	11.8"	
Height (Shroud)	N/A	65"	N/A
Height (Overall)	30'-0"	34'-9"	35'-0"
Top of Pole	28'-9"	29'-3"	N/A
Top of Light	30'-0"	29'-10"	N/A
Color	Gray, lightly exposed aggregate	Gray, lightly exposed aggregate	Design Guidelines

Antenna and RRUs

The proposed facilities incorporate both the antenna and RRUs together within a shroud (65" by 14" diameter) that is closely similar to the diameter of the replacement pole (11.8" diameter) which provides a narrow, streamlined shape and conceals the antenna and RRUs from public view. In order to minimize visual contrast between the facilities and the poles, the gray and lightly exposed aggregate material of the new poles and equipment will match the existing light poles. Therefore, the proposal meets the design guidelines particularly the material and color of the facilities and support equipment with and the shrouds and equipment enclosures lending a narrow vertical alignment.

Location

All five of the selected locations maximize the coverage of the small cell facilities and minimizes the overlap with other facilities of the system, which results in a lower overall number of proposed facilities within the public right-of-way. Although the proposed facilities are within 500-foot of residentially-zoned properties, none of the five proposed facilities are in direct view of residential living areas. (The term direct view, per the adopted design guidelines, means any small cell facility that is within the horizontal field of vision of any residential living area or bedroom window [see Diagram 1]). To avoid any street light outage during the replacement process and to keep compatible spacing between the existing streetlight poles, the proposed poles will be installed three feet from the existing poles; the existing poles will be removed as soon as the new poles are activated.

DIRECT VIEW:

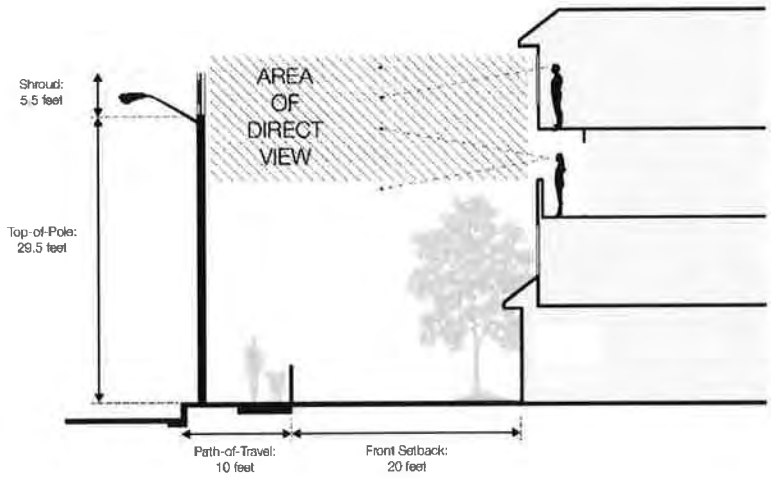

Design Guidelines

The design and construction of the standard SCE aggregate pole has a hollow interior with a structural shell that allows the placement of the wires and cables inside the pole. As conditioned, applicant shall utilize the smallest and lowest visibility notification sign required by public agencies and utility companies to decrease visual distraction. On the ground level, where pedestrian activity occurs, all five of the utility boxes, such as the electrical meters, will be located underground to reduce right-of-way impediments and visual distractions. The overall height of all five poles, including the mounted equipment, is similar to the surrounding poles and will not exceed 35 feet in height.

All five of the proposed small cell facilities meet the design guidelines; therefore, the facilities are the least intrusive means of supporting coverage, balance visual impact and coverage with adequate spacing of the facilities to effectively relay signal with minimum number of node locations, and utilize existing vertical elements to minimize the net number of vertical intrusions in the public rights-of-ways.

Health and Safety

Pursuant to Mobile Services U.S.C 332(c)(7)(B)(iv), no state or local government may regulate the site of wireless telecommunication facilities on the basis of the perceived health effects of radio frequency (RF) emissions to the extent that the proposed facility complies with FCC regulations concerning such emissions. The applicant submitted a detailed report regarding the RF emission for each property. Based on FCC Rules and Regulations, the applicant will be compliant provided recommendations(s) are implemented; conditions of approval requiring proof of compliance for all five facilities is included (condition of approval number 11).

General Plan Consistency

The City's 2015-2035 General Plan ensures that development decisions and improvements to public and private infrastructures are consistent with the goals, objectives, and policies of the City.

- Policy CD-1.5: *Encourage electric and communication lines to be placed underground and electrical substations and telephone facilities to be screened to minimize visual impacts from sidewalks, streets, and adjacent properties. Support utility undergrounding through conditions of project approval, preparation of undergrounding plans, and the formation of assessment districts.*

- Policy C-1.2: *Allow for flexible use of public rights-of-way to accommodate all users of the street system while maintaining safety standards.*

Approval of the facilities will meet the growing demand of the City's telecommunication needs while ensuring that the facilities will not hinder the City's aesthetic and circulation of the public rights-of-ways. The proposals are in keeping with the intent of the City ordinance in that:

- All five facilities and support equipment are designed, textured, and painted to match existing streetlight poles;
- All five facilities use the latest technology to reduce the bulk of the equipment;
- The design screens any supporting electrical and communication lines; and
- Placing all utilities underground allows flexible use of the sidewalks while maintaining safety standards.

FINDINGS

A. The information presented complies with Costa Mesa Municipal Code Section 13-29(e) in that:
    1. As proposed and conditioned, the small cell facilities are compatible and harmonious to the surrounding existing facilities by locating the replacement poles as close as possible to the existing poles and using approved SCE poles that are closely similar to the existing SCE poles.
    2. The proposed streetlight poles are engineered to withstand the weight of the equipment, the small cell facilities will be compliant with FCC's radio frequency emissions, and the location of the replacement poles are close to the existing locations which will not impede the pedestrian and automobile's paths of travel. Therefore, granting the minor conditional use permits will not be detrimental to the health, safety and general welfare of the public or otherwise injurious to property or improvements within the immediate neighborhoods.

3. The proposed small cell facilities all comply with the maximum height of a telecommunication facility allowed within the public rights-of-ways.
4. The proposed small cell facilities meet Policy CD-1.5 and Policy C-1.2 of the City's General Plan.

B. The information presented complies with Costa Mesa Municipal Code Section 13-29(g)(2) in that:
   1. The proposed small cell facilities are compatible and harmonious to the surrounding facilities that exist on the five sites and will not be materially detrimental to other facilities within the individual areas. The facilities and support equipment will be designed, textured, and painted to match the existing streetlight poles.
   2. Granting the minor conditional use permits will not be materially detrimental to the health, safety and general welfare of the public within the immediate neighborhoods of all five facilities because they will be compliant with FCC's radio frequency emissions and meet SCE's design and structural standards.
   3. Granting the minor conditional use permits will not allow a use, density, or intensity which is not in accordance with the General Plan designation for the properties since the facilities are within the public right-of-way and meets the design guidelines.

C. The projects have been reviewed for compliance with the California Environmental Quality Act (CEQA), the CEQA Guidelines, and the City environmental procedures, and all five have been found to be exempt under Section 15303(d), New Construction or Conversion of Small Structures, of the CEQA Guidelines.

CONDITIONS OF APPROVAL

Plng

1. The small cell facilities mounted on SCE's streetlight poles shall be mounted as shown on the attached conceptual plan with appropriate treatments to minimize visual impacts to surrounding properties and uses. Any support cabinet(s) shall be installed underground.
2. Any wireless device colocating on any of the individual facilities shall fit within the proposed shrouds; the shrouds shall remain the same size as approved.
3. All electrical and antenna wiring shall be encased within the street light poles themselves.
4. The applicant shall install the smallest and lowest visibility notification signs required by government or electrical utility regulations and place them as close to the individual antennas as possible.
5. Any substantial modifications to the physical dimension of the equipment or antennas of any of the five facilities shall be done with the prior approval of Planning Staff and may require filing and approval of a minor conditional use permit on an application-by-application/location-by-location basis to ensure compliance with applicable City codes.
6. Applicant shall defend, indemnify and hold harmless the City, its officials and employees, against all legal actions filed challenging City's approval of the applicant's projects and/or challenging any related City actions supporting the approvals. City shall have the right to select the attorney defending it, if it elects to do so.
7. If any section, division, sentence, clause, phrase or portion of this approval is for any reason held to be invalid or unconstitutional by a decision of any court of competent jurisdiction, such decision shall not affect the validity of the remaining provisions.
8. The replacement poles shall be placed as close as possible to the existing poles. The existing poles shall be immediately removed upon the activation of the new poles.
9. The replacement poles shall be of the same materials and as close as possible to the same diameter as the existing street light poles in the vicinity.
10. The Small Cell shall comply with Title 47 - FCC's rules and regulations, including those related to FCC Radio Frequency Safety Guidelines.
11. Within 30 days of the installation of the telecommunications facilities, the applicant shall submit to the City Development Services Department a Radio Frequency (RF) report from an RF Engineer for each individual small cell facility which report details the amount and location of emissions from the telecommunications facility. The RF Engineer shall certify that the facilities, as installed, comply with all applicable RF related FCC regulations.
12. The applicant shall contact the Planning Division and Public Services to arrange an inspection of the sites to confirm that the conditions of approval and code requirements have been satisfied.

13. Prior to the issuance of an encroachment and/or electrical permit, the applicant shall pay the publication and notification fees in the sum of $1,520.93.

CODE REQUIREMENTS

The following list of federal, state, and local laws applicable to the project has been compiled by staff for the applicant's reference. Any reference to "City" pertains to the City of Costa Mesa.

Plng.

1. The approval of the zoning applications shall be valid for a ten-year period from the date of approval (December 13, 2028), unless otherwise indicated in a condition imposed at the time of granting the applications or unless otherwise exempted under federal or state law. Prior to the expiration of the permit(s), the applicant may apply for a ten-year extension of time. If notice was required for the original applications, and a public hearing on the extension is allowed under federal and state law, notice of the public hearing for a time extensions shall be given according to the procedures set forth in this section.
2. The antennas and all support equipment shall comply with all requirements of CMMC 19-15.

Bldg

3. Comply with the requirements of the following adopted codes: 2016 California Building Code, 2016 California Electrical code, 2016 California Mechanical code, 2016 California Plumbing code and 2016 California Energy Code (or the applicable adopted, California Building code California Electrical code, California Mechanical code California Plumbing Code and California Energy Code at the time of plan submittal or permit issuance) and California Code of Regulations also known as the California Building Standards Code, as amended by the City of Costa Mesa. Requirements for accessibility to sites, facilities, buildings and elements by individuals with disability shall comply with chapter 11B of the 2016 California Building Code.

Bus. Lic.

4. All contractors and subcontractors must have valid business licenses to do business in the City of Costa Mesa. Final inspections, final occupancy and utility releases will not be granted until all such licenses have been obtained.

Eng.

5. Obtain an Encroachment Permit for each of the five locations from the Engineering Division for work in the City public right-of-way. Pay required permit fee and cash deposit or surety bond to guarantee construction of off-site street improvements at time of permit per section 15-31 & 15-32, C.C.M.M.C. as approved by City Engineer. Cash deposit or surety bond amount to be determined by City Engineer.

ATTACHMENT 1

AT&T Mobility
Small Cell Project
Site Name: CRAN_RLOS_HBNPB_026

Background

AT&T Mobility (AT&T) mission is to connect people with their world everywhere they live, work and play. AT&T delivers advance mobile services, high speed internet and smart solutions for people and business. AT&T is the global leader in Technology, Media and Telecommunications industry and is committed to the development, growth and improvement of communications in the United States. AT&T is a nationwide wireless service provider located throughout the United States and in U.S. territories. Millions of wireless connections take advantage of the company's mobile products and services. AT&T is committed to improve the customer experience of their hand-held devices, portable computing, and connected automobiles. The company's commitment is to have a robust network of cell sites that could bring faster data speeds and voice connectivity.

AT&T Mobility is a Telephone Corporation registered with the California Public Utilities Commission. The CPUC registration number is U 3060 C. As a Telephone Corporation, AT&T has a legal right to access public right of way under Section 7901 of the California Public Utilities Code.

Mobile Wireless Services

Traditional macro sites are the fundamental building blocks needed for the provision of wireless voice services and high-speed mobile internet. AT&T uses high-band and low-band spectrum to provide wireless service. Each spectrum band has different propagation characteristics, which may experience varied noise or signal interference at a given location. To increase the service quality and reduce noise and interference to the customer, AT&T uses multiple layers of its licensed spectrum to bring its facilities closer to the end user. Signal interference created by environmental clutter or noise from surrounding sources, degrades the signal quality in a manner that affects data rates, service quality, and ultimately coverage. Placing facilities closer to the end user creates smaller coverage cells that produce faster data rates and produces a more efficient use of the limited spectrum.

Adding macro sites has been the typical design solution to increase coverage, capacity and to off-load existing cell sites in the network. This design alternative consists of multiple antennas mounted to a large support structure and a base station of several radio cabinets. The topography of a given area, dense concentration of buildings, the lack of available real estate, the high construction costs and other environmental factors has made it more difficult to bring wireless services closer to the end user in order to reduce weak signals and noise interference, and to increase the data rates which support existing and future demands for optimal user experience of mobile devices.

AT&T solution to increase the densification of wireless signals and coverage capacity of its network in any given geographical area is the implementation of small cells within the public rights of way. Small cells are lightweight and low power antenna solutions designed to cover a radius of up to 1,500 feet. The typical configuration is a single omni directional antenna or a set of small antennas mounted to existing right-of-way infrastructure, including utility poles, replacement streetlights or other infrastructure. Remote radios are also used with the omni-directional antenna to connect the small cell to nearby macro locations or head-end stations via fiber connections. Small cell installations are non-intrusive to the local community and can easily blend-in with the natural urban or suburban landscape.

Project Description

AT&T engineers have identified several locations in Costa Mesa that require stronger signal densification in order to increase throughput rates and to meet the existing and future demands. These locations are shown on the enclosed Small Cell Network map, which includes approximate coverage for each location shown in red circles. Additional areas may be identified in the future as the engineers continue to monitor the network service quality and capacity.

The subject project is located on the intersection of Baker Street and Filmore Way. AT&T proposes to install a single omni-directional antenna mounted on an extension arm attached to an existing wood utility pole. The associated radios, and surge suppressor switch will be install within the support arm. Additional conduits for fiber and power risers will be installed on the subject wood pole. All portions of the installation will be painted brown to match the color of the existing utility pole. The proposed installation is small in scale and will blend with the existing street landscape.

The project scope will consist of the following:

- Installation of a support cross arms.
- Installation of a single omni-directional antenna.
- Installation of four radio units and raycap disconnect switch.
- Installation of disconnect power switches on the existing utility pole.
- Installation of power and fiber conduit risers.
- Installation of a grounding rod.

Plans depicting the project location, design, height and style with the new wireless antenna installation are enclosed. Photographic simulations showing the final antenna installation on the wooden pole is also enclosed. All portions of the antenna, radios, disconnect device will be painted to match.

Alternative Analysis

No alternative analysis is being provided for this type and scale antenna installation within the public right-of-way. Alternatives to this proposal would generally include

building additional towers in the general area, which would create a greater visual impact to the community.

Conformance with FCC Regulations

The proposed low powered antenna installation attached to the utility pole is considered categorical excluded by the FCC based on the analysis included in the FCC Optional Checklist for Determination of the Local Official's Guide to RF (attached). Installation that are categorically excluded are considered to meet or exceed the FCC standards for RF Emissions.

Construction and Maintenance

Construction of the proposed project will take approximately 30-days. All construction will be done in a manner that minimizes impact to residents and business in the area. Existing underground or overhead power and fiber connections will be used with minimal trenching. Directional boring will be used when deemed appropriate for each specific location.

Maintenance of the subject facility is minimal. The majority of the monitoring is done from AT&T's switching offices. If needed, a site visit to change any radio equipment will be coordinated with the existing utility providers and city.

Project Code Compliance

The subject project complies with the City of Costa Mesa Telecommunication Regulatory Ordinance in the Public Right-of-Way, Section 19-15 in the following ways:

1. The proposed wireless facility is a small cell installation to be placed on a utility pole in the public right-of-way and is visually compatible with the surrounding development.
2. The project is allowed subject to the city's approval of a Minor Conditional Use Permit and Encroachment Permit. The proposed installation will not interfere with the use of the existing right-of-way. No ground mounted equipment is proposed.
3. The proposed facility is a low powered antenna designed to work in conjunction with other small cell sites in the area and to off-load capacity from an existing macro facility. The installation will comply with applicable regulations of the Federal Communications Commission as demonstrated in the enclosed FCC Local Official Guide to RF – Appendix A.
4. As stated in the project description, the purpose for the deployment of small cells is to increase the signal quality and capacity to the identified commercial development in this portion of Costa Mesa. As such, implementation of the small cell project will reduce a data signal gap that currently existing at this location.
5. The applicant will conform to all City of Costa Mesa requirements.

EDISON
CARRIER SOLUTIONS℠
A Division of SOUTHERN CALIFORNIA EDISON℠

Brian P. Ryan
Principle Manager
Telephone: 909-274-1949
Brian.Ryan@sce.com

October 26, 2018

To Whom It May Concern:

Since 1994, Southern California Edison (SCE) has assisted wireless service providers in expanding their networks to meet customers' needs for telecommunications service. SCE makes available existing structures that can be used to co-locate the wireless service providers' equipment, while lessening the visual impacts on the community and constituency that is served. This letter requests that you help us in this endeavor.

In an effort to minimize the potential clutter that new vertical structures would produce, many California jurisdictions have adopted ordinances and policies encouraging wireless facilities to be mounted on street light poles within the public rights of way.

As you are aware, SCE owns and maintains street light poles in your jurisdiction pursuant to our LS-1 tariff. In order to accommodate the increasing demand for micro-cell site locations, SCE has agreed to allow wireless service providers to attach their antennas to some of these streetlight poles, and contractually requires the wireless service provider to comply with certain requirements, including a requirement that the facility will not impact SCE's ability to provide street lighting service.

Costa Mesa has and retains full control over the entitlement and permitting process for these and future sites. The wireless service providers also pay for electrical usage resulting from their sites. This electrical service is metered and billed separately, and the Jurisdiction is not impacted.

While SCE believes this approach benefits local governments as well as their constituency, we would not engage in this solution if doing so resulted in extra costs to SCE or Costa Mesa. We would therefore appreciate confirmation that Costa Mesa consents to use of its public rights of way for the purpose of licensing space on an SCE Streetlight Pole # **1462050E** located at: **1087 Baker St**. **AT&T** Site number: **SCL HBNPB 026 PTN 3551A0DQGK FA 14345606**.

Please sign this letter to indicate your consent and return it to me at the below address. If you have any questions, please feel free to call Alexandra Martin (714) 323-5951.

Regards,

Brian P. Ryan

Signature _____

Name _____

Title _____

Date: _____

SCE Edison Carrier Solutions
2 Innovation Way 1st Floor
Pomona, CA 91768

EDISON
CARRIER SOLUTIONS℠
A Division of SOUTHERN CALIFORNIA EDISON℠

Brian Ryan
Principal Manager Telecom Sales
Edison Carrier Solutions
e-mail: Brian.Ryan@sce.com

October 26, 2018

Costa Mesa Planning / Permitting Department

To Whom It May Concern:

Re: Letter of Authorization

SCE streetlight identified as – SCE Streetlight Pole # **1462050E** located adjacent: **1087 Baker St. AT&T** Site Name: **SCL HBNPB 026 PTN 3551A0DQGK FA 14345606**.

Southern California Edison Company (SCE) is the owner of the Light Pole, located in Costa Mesa, CA. AT&T "Carrier" has requested that SCE replace the existing Light Pole so that it can be used for operating a wireless communications facility, ("Site").

SCE has reviewed Carrier's preliminary plans for this Site and believe these plans are compatible with SCE's use of this Light Pole. Thus, as a representative of SCE, I hereby authorize Carrier, and its representatives, to seek and secure all right(s), including any environmental review associated with granting such rights, that are needed from the Jurisdiction to use the Light Pole and other property for this purpose as long as there are no costs to SCE.

Notwithstanding this authorization, SCE reserves the right to reject Carrier's request for use of its Light Pole for any reason, including imposed conditions or required changes to the light pole by the Jurisdiction, are unacceptable to SCE.

All correspondence and/or notices regarding use of SCE's Light Pole by Carrier, or any later requests by the Carrier for authorizations or approvals needed for construction, operation or maintenance of an approved Site, should include a copy to SCE.

If you have any questions concerning this project, please contact Alexandra Martin 714-323-5951.

Sincerely,

Brian P. Ryan

2 Innovation Way, 1st Floor
Pomona, CA 91768

PLEASE TRANSFER LETTER TO CITY LETTERHEAD

Date

Brian Ryan
Southern California Edison
Carrier Solutions Division
2 Innovation Way 1st Floor
Pomona, Ca 91768

Dear Mr. Ryan:

This letter authorizes Southern California Edison (SCE) to disconnect the SCE streetlight identified as – SCE Streetlight Pole **#1462050E** located adjacent: **1087 Baker St**. **AT&T** Site number: **SCL HBNPB 026 PTN 3551A0DQGK FA 14345606** so that work can be performed to replace the existing Streetlight.

AT&T (Wireless Carrier) has requested that SCE replace the Southern California Edison streetlight with a new streetlight that will be used for operating the wireless communications facility identified as SCE Light Pole **#1462050E** located adjacent: 1087 Baker St. **AT&T** Site number: **SCL HBNPB 026 PTN 3551A0DQGK FA 14345606**.

Please coordinate the disconnecting of the streetlight directly with Costa Mesa, (please provide County Contact Name, Phone) so that the light will be out only for the above referenced work to be completed.

If you have any questions, please do not hesitate to call me.

Sincerely,

Name
Public Agency

SOUTHERN CALIFORNIA EDISON STREETLIGHT AUTHORIZATION

DEVELOPER/APPLICANT MUST PROVIDE THIS FORM
COMPLETED BY THE PUBLIC AUTHORITY
FOR ANY SCE-OWNED STREETLIGHT INSTALLATION, REMOVAL OR CHANGE REQUESTS
Incomplete forms will be returned and not processed

PUBLIC AUTHORITY NAME: (Jurisdiction) _____

Builder/Developer Name: (Carrier / Vendor) _____ **Phone #:** (Vendor phone #) _____

Tract/Ref # (Site Number) _____ **Streetlight Location** (Pole #, adjacent address) _____

Please Check one: ☐ **Installation** ☐ **Removal** ☑ **Change**

Number of Lamp(s)	Lamp Size (wattage)	Lamp Type (LED or Sodium Vapor)
1		

New Installations
Public Authority Responsibility for Streetlight Monthly Billing
Please Check one and fill out applicable dates:

____**Upon Energizing**
☐ **If Public Authority is collecting Builder/Developer Advanced Energy Payment, indicate date collected. (_____)**

Monthly Billing: ____**Establish new Service Account (SA)** **Use existing SA #**_____

____ **Commitment Date-**
Date Agreed upon by SCE and Public Authority (_____) or no later than 36 months from first streetlight energized whichever is earlier.

Monthly Billing: ____**Establish new Service Account (SA)** **Use existing SA #**_____

x ___**Public Authority is not responsible**
____**HOA Area** **Name**_____ **Other Entity (please define)** (Carrier name)

Public Authority Notes:
Please notify (Jurisdiction contact name, phone #) when scheduling disconnect of existing streetlight.

0 day outage requested; Jurisdiction retains responsibility for LS-1 lighting electrical payment; Carrier xxxx covers costs of pole replacement

Authorized Public Authority Agent

_____ _____ _____
Print name **Date** **Signature**

Phone #_____ _____
Title

TO BE COMPLETED BY SCE
ACTION: ENTER TRACT/REF# ON DM PROGRAM NAME FIELD.

_____

District _____ **Planning AOR**_____ **PLANNER NAME (PRINT)**

DM SR # _____ **Product #**_____ **(one per SLA)**

FORWARD COMPLETED COPIES OF THE SLA FORM, MAP AND CSD272 CONTRACT, IF APPLICABLE TO:
"Street & Outdoor Lighting Organization" Santa Ana Bldg. D

Radio Frequency – Electromagnetic Energy (RF-EME) Compliance Report

Analysis Completed For:
Site No. CRAN_RLOS_HBNPB_020
MRLOS045170
HBNPB 20B
3590 Harbor Gateway North
Costa Mesa, California 92626
Orange County
33.701857; -117.923339 NAD83
Utility Pole

Note that these results can also be applied to other Costa Mesa locations using the same antenna and power configurations with a greater than or equal to antenna radiation center.

The proposed AT&T installation will be in compliance with FCC regulations upon proper installation of recommended signage.

EBI Project No. 6218004289
June 19, 2018

Prepared for:

AT&T Mobility, LLC
100 West Alondra Boulevard
Gardena, California 90248

Prepared by:

EBI Consulting
environmental | engineering | due diligence

TABLE OF CONTENTS

EXECUTIVE SUMMARY 1
1.0 FEDERAL COMMUNICATIONS COMMISSION (FCC) REQUIREMENTS 3
2.0 AT&T RF EXPOSURE POLICY REQUIREMENTS 5
3.0 WORST-CASE PREDICTIVE MODELING 6
4.0 RECOMMENDED SIGNAGE/COMPLIANCE PLAN 7
5.0 SUMMARY AND CONCLUSIONS 8
6.0 LIMITATIONS 8

APPENDICES

Appendix A Personnel Certifications
Appendix B Compliance/Signage Plan

EXECUTIVE SUMMARY

Purpose of Report

EnviroBusiness Inc. (dba EBI Consulting) has been contracted by AT&T Mobility, LLC to conduct radio frequency electromagnetic (RF-EME) modeling for AT&T Site CRAN_RLOS_HBNPB_020 located at 3590 Harbor Gateway North in Costa Mesa, California to determine RF-EME exposure levels from proposed AT&T wireless communications equipment at this site. As described in greater detail in Section 1.0 of this report, the Federal Communications Commission (FCC) has developed Maximum Permissible Exposure (MPE) Limits for general public exposures and occupational exposures. This report summarizes the results of RF-EME modeling in relation to relevant FCC RF-EME compliance standards for limiting human exposure to RF-EME fields.

This report contains a detailed summary of the RF EME analysis for the site, including the following:

- Site Plan with antenna locations
- Graphical representation of theoretical MPE fields based on modeling
- Graphical representation of recommended signage and/or barriers

This document addresses the compliance of AT&T's transmitting facilities independently and in relation to all collocated facilities at the site.

Statement of Compliance

A site is considered out of compliance with FCC regulations if there are areas that exceed the FCC exposure limits <u>and</u> there are no RF hazard mitigation measures in place. Any carrier which has an installation that contributes more than 5% of the applicable MPE must participate in mitigating these RF hazards.

As presented in the sections below, based on worst-case predictive modeling, there are no modeled exposures on any accessible utility line level and ground walking/working surface related to ATT's proposed antennas that exceed the FCC's occupational and/or general public exposure limits at this site.

As such, the proposed AT&T installation is in compliance with FCC regulations upon proper installation of recommended signage and/or barriers.

AT&T Recommended Signage/Compliance Plan

AT&T's RF Exposure: Responsibilities, Procedures & Guidelines document, dated October 28, 2014, requires that:

1. All sites must be analyzed for RF exposure compliance;
2. All sites must have that analysis documented; and
3. All sites must have any necessary signage and barriers installed.

Site compliance recommendations have been developed based upon protocols presented in AT&T's RF Exposure: Responsibilities, Procedures & Guidelines document, dated October 28, 2014, additional guidance provided by AT&T, EBI's understanding of FCC and OSHA requirements, and common industry practice. Barrier locations have been identified (when required) based on guidance presented in AT&T's RF Exposure: Responsibilities, Procedures & Guidelines document, dated October 28, 2014.

The following signage is recommended at this site:

- Blue NOTICE decals posted around the bottom of the radome of the antenna.

The signage proposed for installation at this site complies with AT&T's RF Exposure: Responsibilities, Procedures & Guidelines document and therefore complies with FCC and OSHA requirements. Barriers are not recommended on this site. More detailed information concerning site compliance recommendations is presented in Section 4.0 and Appendix B of this report.

1.0 FEDERAL COMMUNICATIONS COMMISSION (FCC) REQUIREMENTS

The FCC has established Maximum Permissible Exposure (MPE) limits for human exposure to Radiofrequency Electromagnetic (RF-EME) energy fields, based on exposure limits recommended by the National Council on Radiation Protection and Measurements (NCRP) and, over a wide range of frequencies, the exposure limits developed by the Institute of Electrical and Electronics Engineers, Inc. (IEEE) and adopted by the American National Standards Institute (ANSI) to replace the 1982 ANSI guidelines. Limits for localized absorption are based on recommendations of both ANSI/IEEE and NCRP.

The FCC guidelines incorporate two separate tiers of exposure limits that are based upon occupational/controlled exposure limits (for workers) and general public/uncontrolled exposure limits for members of the general public.

Occupational/controlled exposure limits apply to situations in which persons are exposed as a consequence of their employment and in which those persons who are exposed have been made fully aware of the potential for exposure and can exercise control over their exposure. Occupational/ controlled exposure limits also apply where exposure is of a transient nature as a result of incidental passage through a location where exposure levels may be above general public/uncontrolled limits (see below), as long as the exposed person has been made fully aware of the potential for exposure and can exercise control over his or her exposure by leaving the area or by some other appropriate means.

General public/uncontrolled exposure limits apply to situations in which the general public may be exposed or in which persons who are exposed as a consequence of their employment may not be made fully aware of the potential for exposure or cannot exercise control over their exposure. Therefore, members of the general public would always be considered under this category when exposure is not employment-related, for example, in the case of a telecommunications tower that exposes persons in a nearby residential area.

Table 1 and Figure 1 (below), which are included within the FCC's OET Bulletin 65, summarize the MPE limits for RF emissions. These limits are designed to provide a substantial margin of safety. They vary by frequency to take into account the different types of equipment that may be in operation at a particular facility and are "time-averaged" limits to reflect different durations resulting from controlled and uncontrolled exposures.

The FCC's MPEs are measured in terms of power (mW) over a unit surface area (cm^2). Known as the power density, the FCC has established an occupational MPE of 5 milliwatts per square centimeter (mW/cm^2) and an uncontrolled MPE of 1 mW/cm2 for equipment operating in the 1900 MHz frequency range. For the AT&T equipment operating at 850 MHz, the FCC's occupational MPE is 2.83 mW/cm^2 and an uncontrolled MPE of 0.57 mW/cm^2. For the AT&T equipment operating at 700 MHz, the FCC's occupational MPE is 2.33 mW/cm^2 and an uncontrolled MPE of 0.47 mW/cm^2. These limits are considered protective of these populations.

Table 1: Limits for Maximum Permissible Exposure (MPE)

(A) Limits for Occupational/Controlled Exposure

Frequency Range (MHz)	Electric Field Strength (E) (V/m)	Magnetic Field Strength (H) (A/m)	Power Density (S) (mW/cm^2)	Averaging Time $[E]^2$, $[H]^2$, or S (minutes)
0.3-3.0	614	1.63	(100)*	6
3.0-30	1842/f	4.89/f	($900/f^2$)*	6
30-300	61.4	0.163	1.0	6
300-1,500	--	--	f/300	6

Table 1: Limits for Maximum Permissible Exposure (MPE)				
(A) Limits for Occupational/Controlled Exposure				
Frequency Range (MHz)	**Electric Field Strength (E) (V/m)**	**Magnetic Field Strength (H) (A/m)**	**Power Density (S) (mW/cm²)**	**Averaging Time [E]², [H]², or S (minutes)**
1,500-100,000	--	--	5	6
(B) Limits for General Public/Uncontrolled Exposure				
Frequency Range (MHz)	**Electric Field Strength (E) (V/m)**	**Magnetic Field Strength (H) (A/m)**	**Power Density (S) (mW/cm²)**	**Averaging Time [E]², [H]², or S (minutes)**
0.3-1.34	614	1.63	(100)*	30
1.34-30	824/f	2.19/f	$(180/f^2)$*	30
30-300	27.5	0.073	0.2	30
300-1,500	--	--	f/1,500	30
1,500-100,000	--	--	1.0	30

f = Frequency in (MHz)
* Plane-wave equivalent power density

Figure 1. FCC Limits for Maximum Permissible Exposure (MPE)
Plane-wave Equivalent Power Density

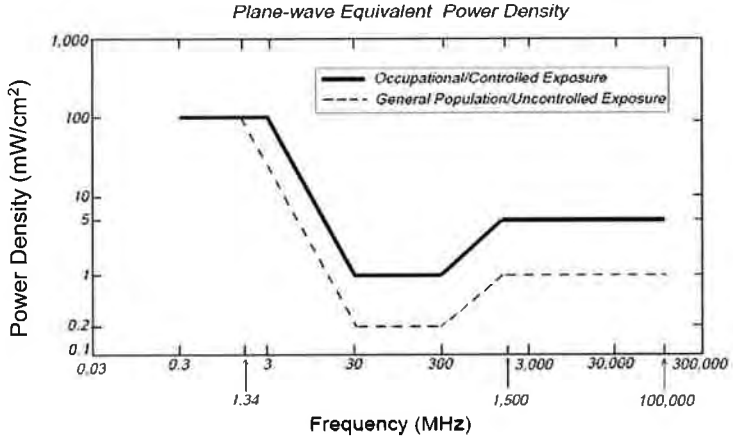

Based on the above, the most restrictive thresholds for exposures of unlimited duration to RF energy for several personal wireless services are summarized below:

Personal Wireless Service	Approximate Frequency	Occupational MPE	Public MPE
Personal Communication (PCS)	1,950 MHz	5.00 mW/cm²	1.00 mW/cm²
Cellular Telephone	870 MHz	2.90 mW/cm²	0.58 mW/cm²
Specialized Mobile Radio	855 MHz	2.85 mW/cm²	0.57 mW/cm²
Long Term Evolution (LTE)	700 MHz	2.33 mW/cm²	0.47 mW/cm²
Most Restrictive Freq, Range	30-300 MHz	1.00 mW/cm²	0.20 mW/cm²

MPE limits are designed to provide a substantial margin of safety. These limits apply for continuous exposures and are intended to provide a prudent margin of safety for all persons, regardless of age, gender, size, or health.

Personal Communication (PCS) facilities used by AT&T in this area operate within a frequency range of 700-1900 MHz. Facilities typically consist of: 1) electronic transceivers (the radios or cabinets) connected to wired telephone lines; and 2) antennas that send the wireless signals created by the transceivers to be received by individual subscriber units (PCS telephones). Transceivers are typically connected to antennas by coaxial cables.

Because of the short wavelength of PCS services, the antennas require line-of-site paths for good propagation, and are typically installed above ground level. Antennas are constructed to concentrate energy towards the horizon, with as little energy as possible scattered towards the ground or the sky. This design, combined with the low power of PCS facilities, generally results in no possibility for exposure to approach Maximum Permissible Exposure (MPE) levels, with the exception of areas directly in front of the antennas.

2.0 AT&T RF Exposure Policy Requirements

AT&T's RF Exposure: Responsibilities, Procedures & Guidelines document, dated October 28, 2014, requires that:

1. All sites must be analyzed for RF exposure compliance;
2. All sites must have that analysis documented; and
3. All sites must have any necessary signage and barriers installed.

Pursuant to this guidance, worst-case predictive modeling was performed for the site. This modeling is described below in Section 3.0. Lastly, based on the modeling and survey data, EBI has produced a Compliance Plan for this site that outlines the recommended signage and barriers. The recommended Compliance Plan for this site is described in Section 4.0.

3.0 WORST-CASE PREDICTIVE MODELING

In accordance with AT&T's RF Exposure policy, EBI performed theoretical modeling using RoofView® software to estimate the worst-case power density at the site utility line level and ground-level resulting from operation of the antennas. RoofView® is a widely-used predictive modeling program that has been developed by Richard Tell Associates to predict both near field and far field RF power density values for roof-top and tower telecommunications sites produced by vertical collinear antennas that are typically used in the cellular, PCS, paging and other communications services. The models utilize several operational specifications for different types of antennas to produce a plot of spatially-averaged power densities that can be expressed as a percentage of the applicable exposure limit.

For this report, EBI utilized antenna and power data provided by AT&T, and compared the resultant worst-case MPE levels to the FCC's occupational/controlled exposure limits outlined in OET Bulletin 65. For this report, EBI utilized antenna and power data provided by AT&T and compared the resultant worst-case MPE levels to the FCC's occupational/controlled exposure limits outlined in OET Bulletin 65. The assumptions used in the modeling are based upon information provided by AT&T and information gathered from other sources. There are no other wireless carriers with equipment installed at this site.

Based on worst-case predictive modeling, there are no modeled exposures on any accessible utility line level and ground walking/working surface related to ATT's proposed antennas that exceed the FCC's occupational and/or general public exposure limits at this site.

At the nearest walking/working surfaces to the AT&T antenna, the maximum power density generated by the AT&T antenna is approximately 57.10 percent of the FCC's general public limit (11.42 percent of the FCC's occupational limit). The composite exposure level from all carriers on this site is approximately 57.10 percent of the FCC's general public limit (11.42 percent of the FCC's occupational limit) at the nearest walking/working surface to each antenna. Based on worst-case predictive modeling, there are no areas at ground level related to the proposed AT&T antenna that exceed the FCC's occupational or general public exposure limits at this site. At ground level, the maximum power density generated by the antenna is approximately 1.00 percent of the FCC's general public limit (0.20 percent of the FCC's occupational limit).

A graphical representation of the RoofView® modeling results is presented in Appendix B. It should be noted that RoofView® is not suitable for modeling microwave dish antennas; however, these units are designed for point-to-point operations at the elevations of the installed equipment rather than ground-level coverage. Based on AT&T's RF Exposure: Responsibilities, Procedures & Guidelines document, dated October 28, 2014, microwave antennas are considered compliant if they are higher than 20 feet above any accessible walking/working surface. There are no microwaves installed at this site.

4.0 RECOMMENDED SIGNAGE/COMPLIANCE PLAN

Signs are the primary means for control of access to areas where RF exposure levels may potentially exceed the MPE. As presented in the AT&T guidance document, the signs must:

- Be posted at a conspicuous point;
- Be posted at the appropriate locations;
- Be readily visible; and
- Make the reader aware of the potential risks prior to entering the affected area.

The table below presents the signs that may be used for AT&T installations.

Informational Signs		Alerting Signs	
	INFO 1	NOTICE 1	NOTICE 2
	INFO 2	NOTICE DECAL	
	INFO 3	CAUTION 1 – ROOFTOP	CAUTION 2 - ROOFTOP
	INFO 4	CAUTION - TOWER	WARNING

Based upon protocols presented in AT&T's RF Exposure: Responsibilities, Procedures & Guidelines document, dated October 28, 2014, and additional guidance provided by AT&T, the following signage is recommended on the site:

- Blue NOTICE decals posted around the bottom of the radome of the antenna.

No barriers are required for this site. The signage is graphically represented in the Signage Plan presented in Appendix B.

5.0 SUMMARY AND CONCLUSIONS

EBI has prepared this Radiofrequency Emissions Compliance Report for the proposed AT&T telecommunications equipment at the site located at 3590 Harbor Gateway North in Costa Mesa, California.

EBI has conducted theoretical modeling to estimate the worst-case power density from AT&T antennas to document potential MPE levels at this location and ensure that site control measures are adequate to meet FCC and OSHA requirements, as well as AT&T's corporate RF safety policies. As presented in the preceding sections, based on worst-case predictive modeling, there are no modeled exposures on any accessible utility line level and ground walking/working surface related to ATT's proposed antennas that exceed the FCC's occupational and/or general public exposure limits at this site.

Signage is recommended at the site as presented in Section 4.0 and Appendix B. Posting of the signage brings the site into compliance with FCC rules and regulations and AT&T's corporate RF safety policies.

6.0 LIMITATIONS

This report was prepared for the use of AT&T Mobility, LLC to meet requirements outlined in AT&T's corporate RF safety guidelines. It was performed in accordance with generally accepted practices of other consultants undertaking similar studies at the same time and in the same locale under like circumstances. The conclusions provided by EBI are based solely on the information provided by the client. The observations in this report are valid on the date of the investigation. Any additional information that becomes available concerning the site should be provided to EBI so that our conclusions may be revised and modified, if necessary. This report has been prepared in accordance with Standard Conditions for Engagement and authorized proposal, both of which are integral parts of this report. No other warranty, expressed or implied, is made.

Appendix A

Personnel Certifications

Reviewed and Approved by:

REGISTERED PROFESSIONAL ENGINEER
MICHAEL A. McGUIRE
E18898
EXP. 30 SEP 19
ELECTRICAL
STATE OF CALIFORNIA

sealed 6jun2018

Michael McGuire
Electrical Engineer

Note that EBI's scope of work is limited to an evaluation of the Radio Frequency – Electromagnetic Energy (RF-EME) field generated by the antennas and broadcast equipment noted in this report. The engineering and design of the structure, as well as the impact of the antennas and broadcast equipment on the structural integrity of the structure, are specifically excluded from EBI's scope of work.

Preparer Certification

I, Ryan Eaton, state that:

- I am an employee of EnviroBusiness Inc. (d/b/a EBI Consulting), which provides RF-EME safety and compliance services to the wireless communications industry.
- I have successfully completed RF-EME safety training, and I am aware of the potential hazards from RF-EME and would be classified "occupational" under the FCC regulations.
- I am familiar with the FCC rules and regulations as well as OSHA regulations both in general and as they apply to RF-EME exposure.
- I have been trained in on the procedures outlined in AT&T's RF Exposure: Responsibilities, Procedures & Guidelines document (dated October 28, 2014) and on RF-EME modeling using RoofView® modeling software.
- I have reviewed the data provided by the client and incorporated it into this Site Compliance Report such that the information contained in this report is true and accurate to the best of my knowledge.

Appendix B

Compliance/Signage Plan

At the nearest walking/working surfaces to the AT&T antenna, the maximum power density generated by the AT&T antenna is approximately 57.10 percent of the FCC's general public limit (11.42 percent of the FCC's occupational limit). The composite exposure level from all carriers on this site is approximately 57.10 percent of the FCC's general public limit (11.42 percent of the FCC's occupational limit) at the nearest walking/working surface to each antenna. Based on worst-case predictive modeling, there are no areas at ground level related to the proposed AT&T antenna that exceed the FCC's occupational or general public exposure limits at this site. At ground level, the maximum power density generated by the AT&T antenna is approximately 1.00 percent of the FCC's general public limit (0.20 percent of the FCC's occupational limit).

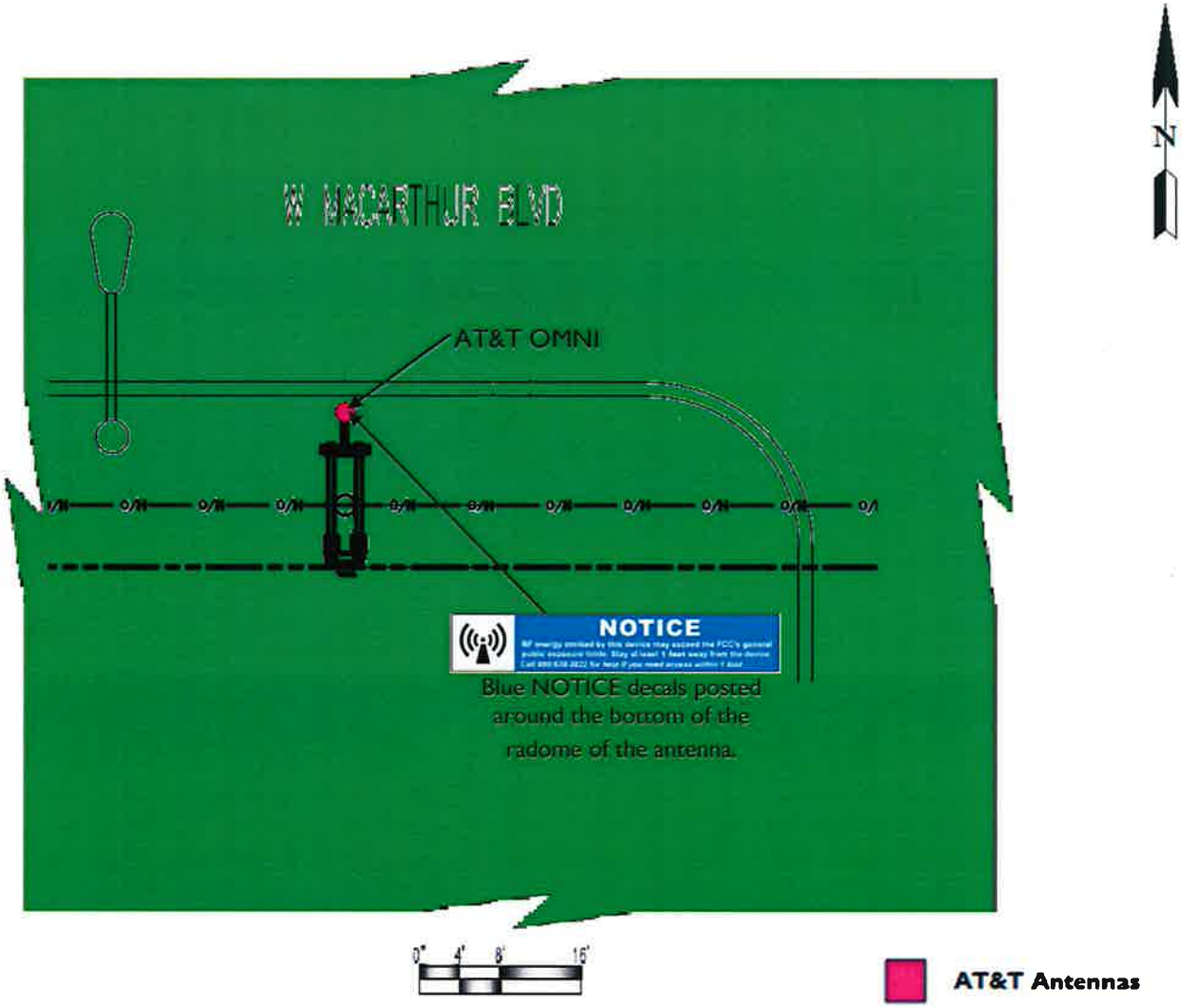

% FCC Public Exposure Limit	
	Exposure Level ≥ 5,000
	500 < Exposure Level ≤ 5,000
	100 < Exposure Level ≤ 500
	Exposure Level ≤ 100

Sign Identification Legend			
	Denotes AT&T Information Sign 1		Denotes AT&T NOTICE Sign
	Denotes AT&T Information Sign 2		Denotes AT&T CAUTION Sign
	Denotes AT&T Information Sign 3		Denotes AT&T CAUTION Tower Sign
	Denotes AT&T Information Sign 4		Denotes AT&T WARNING Sign

Compliance/Signage Plan

Facility Operator: AT&T Mobility
Site Name: HBNPB 20B
AT&T Site Number: CRAN_RLOS_HBNPB_020
USID Number: 188431
Report Date: 06-19-18

EBI Consulting
environmental | engineering | due diligence

Statement of CLEC and CPUC Status

New Cingular Wireless PCS LLC ("NCW") dba AT&T Mobility is a telephone corporation that provides wireless service in the City of Costa Mesa pursuant to a Wireless Identification Registration Number, U 3060 C, issued by the California Public Utilities Commission. Section 7901 of the California Public Utilities Code authorizes telephone corporations to construct facilities in the public right of way. Thus, as a registered wireless carrier, NCW is allowed to construct facilities in the public right of way.

NCW does not have and is not required to have a Certificate of Public Convenience and Necessity (CPCN). The CPUC terminated the requirement for wireless carriers to have CPCNs in 1994 and replaced it with the registration process. Please see Section 1013 of the Cal. Pub. Util. Code and attached letter from CPUC.

Under Cal. Pub. Utils. Code §§ 7901 & 7901.1 (excerpted below), AT&T has an affirmative right to deploy its facilities in public right-of-way subject to the city's police power to control the location and manner of an installation. The city police power, however, is limited, and it must exercise this authority in a reasonable and nondiscriminatory manner. See 7901.1.

PUBLIC UTILITIES CODE SECTION 7901-7901.1

7901. Telegraph or telephone corporations may construct lines of telegraph or telephone lines along and upon any public road or highway, along or across any of the waters or lands within this State, and may erect poles, posts, piers, or abutments for supporting the insulators, wires, and other necessary fixtures of their lines, in such manner and at such points as not to incommode the public use of the road or highway or interrupt the navigation of the waters.

7901.1. (a) It is the intent of the Legislature, consistent with Section 7901, that municipalities shall have the right to exercise reasonable control as to the time, place, and manner in which roads, highways, and waterways are accessed.
(b) The control, to be reasonable, shall, at a minimum, be applied to all entities in an equivalent manner.
(c) Nothing in this section shall add to or subtract from any existing authority with respect to the imposition of fees by municipalities.

STATE OF CALIFORNIA

ARNOLD SCHWARZENEGGER, GOVERNOR

PUBLIC UTILITIES COMMISSION
505 VAN NESS AVENUE
SAN FRANCISCO, CA 94102-3298

To: CMSR Registration Applicant

Subject: Information Required to Obtain Wireless Identification Registration (WIR) Number (U Number).

Dear Applicant,

For your information, Commission Decision 94-10-031, (issued on October 12, 1994) established a wireless registration process for all Commercial Mobile Radiotelephone Services (CMRS) providers within California. The Commission has eliminated the Certificate of Public Necessity and Convenience (CPCN) for all CMRS providers. This policy change is a result of action by Congress in the Omnibus Budget Reconciliation Act of 1993, which removed states authority to regulate entry and rates of CMRS providers effective August 10, 1994.

In lieu of the CPCN, the Commission now requires CMRS providers who did not hold a CPCN prior to August 10, 1994, and who intend to offer intrastate wireless telecommunications services within California, to file a Wireless Identification Registration containing the following information concurrent with undertaking such service. This information must be on company letterhead, type of service to be offered, and signed by at least one officer of the company.

1. The legal name of the business offering such service.
2. Any fictitious or other names under which such service will be offered.
3. The local business address for the utility, if any.
4. The home office business address if different than the local business address.
5. The name and address of the designated agent for service of process.
6. Name, title, address, and telephone number of the person to be contacted regarding the reported information.
7. The identity of the directors and principal officers of the business.
8. Names of all affiliated companies and their relationship, indicating if the affiliate is a regulated public utility.
9. Telephone numbers to which service or other customer complaints should be directed.

The information should be filed with the Telecommunications Division. Service can be commenced upon receiving the WIN from the CPUC. You should receive a WIN within a few days after the Commission receives the registration information.

Within 30 days of a change in the status of any of the information items listed above, the carrier shall notify the Telecommunications Division of such change in writing.

If you have questions or need further clarification please call Rudy Sastra at (415) 703-2673.

Sincerely,

Jack Leutza, Director
Telecommunications Division

PLEASE SEND THIS INFORMATION TO:

Rudy Sastra
Carrier Branch
Telecommunications Division
California Public Utilities Commission
505 Van Ness Avenue
San Francisco, CA 94102
(415) 703-2673

M SQUARED WIRELESS
1387 CALLE AVANZADO
SAN CLEMENTE CA 92673 (949) 391-6824

CRAN_RLOS_HBNPB_026

BURB6 08A

1087 BAKER ST COSTA MESA, CA 92626

AT&T

LOCATION

©2016 Google Maps

EXISTING

PROPOSED

LOOKING SOUTHEAST FROM BAKER ST

M SQUARED WIRELESS
1387 CALLE AVANZADO
SAN CLEMENTE CA 92673 (949) 391-6624

CRAN_RLOS_HBNPB_026

BURB6 08A

1087 BAKER ST COSTA MESA, CA 92626

AT&T

LOCATION

©2016 Google Maps

EXISTING

PROPOSED

LOOKING SOUTHWEST FROM BAKER ST

SITE NAME: HBNPB 26C
SITE NUMBER: CRAN_RLOS_HBNPB_026
PROJECT: CRAN/ SMALL CELL
USID: 188437
PACE: MRLOS045379

at&t

POLE TYPE: (N) CONCRETE LIGHT PLE
POLE ID #: 1462050E
LATITUDE/LONGITUDE: 33.680028/ -117.902731
SITE ADDRESS: 1087 BAKER ST., COSTA MESA, CA 92626

MINOR CONDITIONAL USE PERMIT
ADMINISTRATIVE ADJUSTMENT NO ZA-18-12
Approval in Concept
SUBJECT TO CONDITIONS
CITY OF COSTA MESA
PLANNING DEPT.
BY JMA DATE 12/05/18

ALL WORK AND MATERIALS SHALL BE PERFORMED AND INSTALLED IN ACCORDANCE WITH THE CURRENT EDITIONS OF THE FOLLOWING CODES AS ADOPTED BY THE LOCAL GOVERNING AUTHORITIES. NOTHING IN THESE PLANS IS TO BE CONSTRUCTED TO PERMIT WORK NOT CONFORMING TO THESE CODES.

1. 2016 CALIFORNIA ADMINISTRATIVE CODE
2. 2016 CALIFORNIA BUILDING CODE
3. 2016 CALIFORNIA ELECTRIC CODE
4. 2016 CALIFORNIA MECHANICAL CODE
5. 2016 CALIFORNIA PLUMBING CODE
6. 2016 CALIFORNIA FIRE CODE
7. ANY LOCAL BUILDING CODE AMENDMENTS TO THE ABOVE
8. CITY/COUNTY ORDINANCES

HANDICAP REQUIREMENTS:

FACILITY IS UNMANNED AND NOT FOR HUMAN HABITATION. HANDICAPPED ACCESS NOT REQUIRED IN ACCORDANCE WITH CALIFORNIA ADMINISTRATIVE STATE CODE PART 2, TITLE 24, CHAPTER 11B, SECTION 1103B.

CODE COMPLIANCE

THE FACILITY IS UNMANNED AND NOT FOR HUMAN HABITATION. A TECHNICIAN WILL VISIT THE SITE AS REQUIRED FOR ROUTINE MAINTENANCE. THE PROJECT WILL NOT RESULT IN ANY SIGNIFICANT DISTURBANCE OR EFFECT ON DRAINAGE; NO SANITARY SEWER SERVICE, POTABLE WATER, OR TRASH DISPOSAL IS REQUIRED AND NO COMMERCIAL SIGNAGE IS NEW.

GENERAL NOTES

811 **Dig Alert**
Know what's **below.**
Call before you dig.
CALIFORNIA SOUTH
Call Two Working Days Before You Dig!
811 / 800-227-2600

DIG ALERT

PUBLIC/PRIVATE:	PUBLIC RIGHT-OF-WAY
ADDRESS:	1087 BAKER ST., COSTA MESA, CA 92626
APPLICANT:	AT&T
ADDRESS:	1452 EDINGER AVE TUSTIN, CA 92780
LATITUDE (NAD 83):	33.680028
LONGITUDE (NAD 83):	-117.902731
LAT/LONG TYPE:	NAD-83
GROUND ELEVATION (NAVD 88)	±41'
JURISDICTION:	CITY OF COSTA MESA
CURRENT ZONING:	PUBLIC RIGHT OF WAY
PROPOSED USE:	UNMANNED TELECOMMUNICATIONS
POWER COMPANY:	SCE
ADDRESS:	1 INNOVATION WAY POMONA, CA 91768

PROJECT SITE INFORMATION

PROJECT MANAGER:
M SQUARED WIRELESS
1387 CALLE AVANZADO
SAN CLEMENTE, CA 92673

SAC/ZONING/PERMITTING:
M SQUARED WIRELESS
1387 CALLE AVANZADO
SAN CLEMENTE, CA 92673

RF ENGINEER:
AT&T
1452 EDINGER AVE.
TUSTIN, CA 92618
CONTACT: KARLO DAVINAGRACIA
EMAIL: KD270J@ATT.COM

ENGINEER:
M SQUARED WIRELESS
1387 CALLE AVANZADO
SAN CLEMENTE, CA 92673

SENIOR TECHNICAL PROJECT MANAGER:
AT&T
1452 EDINGER AVE.
TUSTIN, CA 92618
CONTACT: OMAR MERE
EMAIL: OM5039@ATT.COM

PROJECT TEAM

AREA MAPS

VICINITY MAP

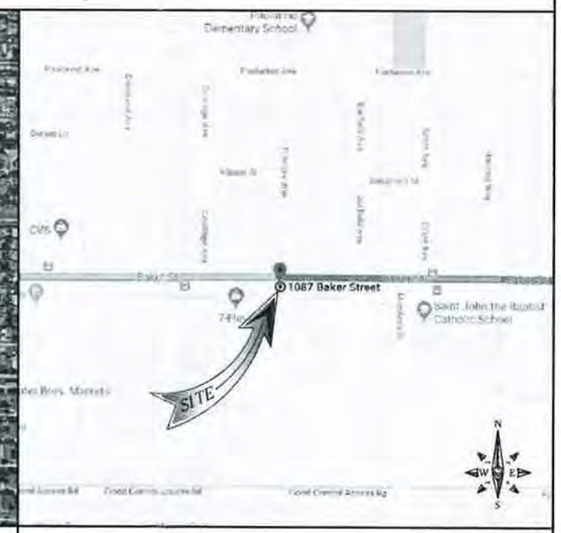

LOCATION MAP

DIRECTIONS FROM AT&T OFFICE:

DIRECTION ARE TAKEN FROM
1452 EDINGER AVE.
TUSTIN, CA 92780

1. TURN RIGHT ONTO AT&T
2. TURN LEFT ONTO THE STATE ROUTE 55 S. RAMP
3. TAKE EXIT 5B TOWARD BAKER ST
4. CONTINUE ONTO NEWPORT BLVD
5. TURN RIGHT ONTO BAKER ST
6. APPROX. 20' PASS GRACE LANE

DESTINATION WILL BE ON THE LEFT.
1087 BAKER ST.,
COSTA MESA, CA 92626

DRIVING DIRECTIONS

IF USING 11"x17" PLOT, DRAWING WILL BE HALF SCALE

CONSTRUCTION DRAWING

THE FOLLOWING PARTIES HEREBY APPROVE AND ACCEPT THESE DOCUMENTS & AUTHORIZE THE SUBCONTRACTOR TO PROCEED WITH THE CONSTRUCTION DESCRIBED HEREIN. ALL DOCUMENTS ARE SUBJECT TO REVIEW BY THE LOCAL BUILDING DEPARTMENT & MAY IMPOSE CHANGES OR MODIFICATIONS.

APPROVED BY:	INITIALS:	DATE:
AT&T RF ENGINEER:		
AT&T OPERATIONS:		
SITE ACQUISITION MANAGER:		
PROJECT MANAGER:		
ZONING VENDOR:		
LEASING VENDOR:		
CONSTRUCTION MANAGER:		
A/E MANAGER:		
PROPERTY OWNER:		
UTILITY MANAGER:		

APPROVALS

AT&T PROPOSES TO INSTALL A NEW WIRELESS INSTALLATION LOCATED IN THE PUBLIC RIGHT OF WAY TO (N) CONCRETE LIGHT POLE.

THE SCOPE WILL CONSIST OF THE FOLLOWING:

* SCE TO REMOVE (1) EXISTING CONCRETE STREETLIGHT
* SCE TO INSTALL (1) 29'-3" CONCRETE STREETLIGHT
* AT&T TO INSTALL (4) NEW AT&T REMOTE RADIO UNITS
* AT&T TO INSTALL (1) NEW AT&T OMNI-DIRECTIONAL ANTENNA
* AT&T TO INSTALL (1) NEW AT&T EQUIPMENT SHROUD
* AT&T TO INSTALL (1) NEW RAYCAP DISCONNECT
* AT&T TO INSTALL (1) NEW HANDHOLE

PROJECT DESCRIPTION

SHEET NO:	SHEET TITLE
T-1	TITLE SHEET
GN-1	GENERAL NOTES
A-1	SITE PLAN
A-2	ELEVATIONS
A-3	ELEVATIONS
A-4	SITE IMAGE
D-1	DETAILS
S-1	POLE DETAILS
S-2	POLE FOUNDATION DETAILS
E-1	ELECTRICAL & GROUNDING DETAILS

DRAWING INDEX

SUBCONTRACTOR SHALL VERIFY ALL PLANS & EXISTING DIMENSIONS & CONDITIONS ON THE JOB SITE & SHALL IMMEDIATELY NOTIFY THE ENGINEER IN WRITING OF ANY DISCREPANCIES BEFORE PROCEEDING WITH THE WORK OR BE RESPONSIBLE FOR SAME.

DO NOT SCALE DRAWINGS

at&t

ERICSSON
330 COMMERCE, STE. 200
IRVINE, CA 92602

M SQUARED WIRELESS
1387 CALLE AVANZADO
SAN CLEMENTE CA 92673 (949) 361-8824

DRAWN BY:	AS
CHECKED BY:	MM

REV	DATE	DESCRIPTION
C	07/17/2018	REVISION
B	03/14/2018	100% CONSTRUCTION
A	12/28/2017	90% CONSTRUCTION

REGISTERED PROFESSIONAL ENGINEER
LOYALL A. WHARTON
C50547
CIVIL
STATE OF CALIFORNIA

IT IS A VIOLATION OF LAW FOR ANY PERSON, UNLESS THEY ARE ACTING UNDER THE DIRECTION OF A LICENSED PROFESSIONAL ENGINEER, TO ALTER THIS DOCUMENT.

SITE ID: HBNPB 26C
1087 BAKER ST.
COSTA MESA, CA, 92626

SHEET TITLE
TITLE SHEET

SHEET NUMBER
T-1

NEW ANTENNA	
EXISTING ANTENNA	
GROUND ROD	
GROUND BUS BAR	
MECHANICAL GRND. CONN.	
CADWELD	
GROUND ACCESS WELL	
ELECTRIC BOX	
TELEPHONE BOX	
LIGHT POLE	
FND. MONUMENT	
SPOT ELEVATION	
SET POINT	
REVISION	
GRID REFERENCE	
DETAIL REFERENCE	
ELEVATION REFERENCE	
SECTION REFERENCE	
GROUT OR PLASTER	
(E) BRICK	
(E) MASONRY	
CONCRETE	
EARTH	
GRAVEL	
PLYWOOD	
SAND	
WOOD CONT.	
WOOD BLOCKING	
STEEL	
CENTERLINE	
PROPERTY/LEASE LINE	
MATCH LINE	
WORK POINT	
GROUND CONDUCTOR	
COAXIAL CABLE	A
OVERHEAD SERVICE CONDUCTORS	OU
CHAIN LINK FENCING	X
OVERHEAD TELEPHONE/OVERHEAD POWER	
OVERHEAD TELEPHONE LINE	OHT
OVERHEAD POWER LINE	OHP
POWER RUN	E
FIBER/POWER RUN	F/P
TELCO RUN	T
POWER/TELCO RUN	T/E
GROUNDING CONDUCTOR	G
GROUNDING CONDUCTOR	
CONDUIT UNDERGROUND	
FUSE, SIZE AND TYPE AS INDICATED.	
SAFETY SWITCH, 2P–240V–60A W/60A FUSES, NEMA 3R ENCLOSURE, SQ D CATALOG NO. H222NRB	
MANUAL TRANSFER SWITCH, 2P–240V–200A, NO FUSE, NEMA 3R ENCLOSURE	
LIGHTING FIXTURE, FLUORESCENT, 10.94" x 4'–0", 2/40W, SURFACE MOUNTING TYPE, HUBBELL LIGHTING CATALOG #WSW232T	
LIGHTING FIXTURE, FLUORESCENT, 10.94" x 8'–0", 2/95W, SURFACE MOUNTING TYPE, HUBBELL LIGHTING CATALOG #TWSM232T	
LIGHTING FIXTURE, HIGH PRESSURE SODIUM, 1/70W, WALL MOUNTING TYPE, HUBBELL LIGHTING CATALOG #NRG–307 OR 1/50W, HUBBELL LIGHTING CATALOG #NRG–121	
EXIT SIGN, THERMOPLASTIC LED, SINGLE FACE, UNIVERSAL MOUNTING, W/BATTERY PACK, HUBBELL LIGHTING CATALOG #PRB	
COMBINATION, EXIT SIGN & EMERGENCY LIGHTING, HUBBELL LIGHTING CATALOG #PRC	EXIT
EMERGENCY LIGHTING, 2/50W, HUBBELL LIGHTING CATALOG #HE6–50–2–R91	
LIGHTING FIXTURE, INCANDESCENT, 1/100W, WALL MOUNTING TYPE, HUBBELL LIGHTING CATALOG #BRH–100–06–1	
LIGHTING FIXTURE, HALOGEN, QUARTZ, 1/300W, HUBBELL LIGHTING CATALOG #QL–505	
LIGHTING FIXTURE, 1/175W. METAL HALIDE, HUBBELL CAT #MIC–0175H–336	
5/8" X 10'–0" ,CU. GND ROD 30" MIN. BELOW GRADE.	
5/8" X 10'–0" ,CU. GND ROD IN TEST WELL 30" MIN. BELOW GRADE.	
CHEMICAL GROUND ROD (XIT GROUND ROD)	
CADWELD CONNECTION	
MECHANICAL CONNECTION	
HALO GROUND CONNECTION	
CIRCUIT BREAKER	
UTILITY METER BASE	
TRANSFORMER	
STEPDOWN TRANSFORMER	
RECEPTACLE, 2P–3W–125V–15A, DUPLEX, GROUND TYPE, HUBBEL CATALOG #5362	
TOGGLE SWITCH, 1P–125V–15A, HUBBELL CATALOG #HBL 1201CN	S
TOGGLE SWITCH, 1P–120V–15A, "WP"	S_{WP}
IONIZATION SMOKE DETECTOR W/ALARM HORN & AUXILIARY CONTACT, 120 VAC, GENTEX PART NO. 7100F	S
POLE	
(N) POLE MOUNTED XFMER	
(E) POLE MOUNTED XFMER	
(N) PAD MOUNTED XFMER	
(E) PAD MOUNTED XFMER	

ABBREVIATIONS

1

A	AMPERE
A.B.	ANCHOR BOLT
ABV.	ABOVE
AC	ALTERNATE CURRENT/AIR CONDITIONER
ACCA	ANTENNA CABLE COVER ASSEMBLY
ADD'L	ADDITIONAL
A.F.F.	ABOVE FINISHED FLOOR
A.F.G.	ABOVE FINISHED GRADE
AIC	AMPERE INTERRUPTING CAPACITY
ALUM.	ALUMINUM
ALT.	ALTERNATE
ANT.	ANTENNA
APPROX.	APPROXIMATE(LY)
ARCH.	ARCHITECT(URAL)
AT.	AMPERE TRIP
AWG.	AMERICAN WIRE GAUGE
BATT.	BATTERY
BD.	BOARD
BLDG.	BUILDING
BLK.	BLOCK
BLKG.	BLOCKING
BM.	BEAM
B.N.	BOUNDARY NAILING
BR.	BRANCH
BRKR.	BREAKER
BTCW.	BARE TINNED COPPER WIRE
BTS.	BASE TRANSMISSION SYSTEM
B.O.F.	BOTTOM OF FOOTING
B/U	BACK–UP CABINET
C	CONDUIT
CAB.	CABINET
CANT.	CANTILEVER(ED)
CB.	CIRCUIT BREAKER
CDMA	CODE–DIVISION MULTIPLE ACCESS (2G & 3G)
CDUK	CONSOLIDATION DISTRIBUTION UNIT KIT
C.I.P.	CAST IN PLACE
CKT.	CIRCUIT
CLG.	CEILING
CLR.	CLEAR
CMU	CONCRETE MASONRY UNIT (JAMB BLOCKS)
COL.	COLUMN
CONC.	CONCRETE
CONN.	CONNECTION(OR)
CONST.	CONSTRUCTION
CONT.	CONTINUOUS
d	PENNY (NAILS)
DBL.	DOUBLE
DC	DIRECT CURRENT
DEM.	DEMAND
DEPT.	DEPARTMENT
D.F.	DOUGLAS FIR
DIA.	DIAMETER
DIAG.	DIAGONAL
DIM.	DIMENSION
DWG.	DRAWING(S)
DWL.	DOWEL(S)
EA.	EACH
EGR.	EMERGENCY GENERATOR RECEPTACLE
EL.	ELEVATION
ELEC.	ELECTRICAL
ELEV.	ELEVATOR
EMT.	ELECTRICAL METALLIC TUBING
E.N.	EDGE NAIL
ENCL.	ENCLOSURE
ENG.	ENGINEER
EQ.	EQUAL
EXST.(E)	EXISTING
EXP.	EXPANSION
EXT.	EXTERIOR
FAB.	FABRICATION(OR)
FAC.	FACTOR
F/A	FIRE ALARM
F.F.	FINISH FLOOR
F.G.	FINISH GRADE
FIN.	FINISH(ED)
FLR.	FLOOR
FLUOR	FLUORESCENT
FDN.	FOUNDATION
F.O.C.	FACE OF CONCRETE
F.O.M.	FACE OF MASONRY
F.O.S.	FACE OF STUD
F.O.W.	FACE OF WALL
F.S.	FINISH SURFACE
FT.(')	FOOT (FEET)
FTG.	FOOTING
FU	FUSE
G	GROUND
GR	GROWTH (CABINET)
GA.	GAUGE
GEN.	GENERATOR
GI.	GALVANIZE(D)
G.F.C.I.	GROUND FAULT CIRCUIT INTERRUPTER
GLB. (GLU–LAM)	GLUE LAMINATED BEAM
GND	GROUND
GPS	GLOBAL POSITIONING SYSTEM
GRND.	GROUND
GSM	GLOBAL SYSTEM MOBILE (2G+ MOBILE TECH)
HDBC	HARD DRAWN COPPER WIRE
HDR.	HEADER
HGR.	HANGER
HPS	HIGH PRESSURE SODIUM
HT.	HEIGHT
ICGB.	ISOLATED COPPER GROUND BUS
IN.(")	INCH(ES)
INT.	INTERIOR
LB.(#)	POUND(S)
L.B.	LAG BOLTS
L.F.	LINEAR FEET (FOOT)
LG.	LENGTH
L.	LONG(ITUDINAL)
LPS	LOW PRESSURE SODIUM
LTE	LONG TERM EVOLUTION (4G MOBILE TECH.)
MAS.	MASONRY
MAX.	MAXIMUM
M.B.	MACHINE BOLT
MECH.	MECHANICAL
MFR.	MANUFACTURER
MIN.	MINIMUM
MISC.	MISCELLANEOUS
MLO	MAIN LUGS ONLY
MTD.	MOUNTED
MTG.	MOUNTING
MTL.	METAL
MTS.	MANUAL TRANSFER SWITCH
N	NEUTRAL
(N)	NEW
NEMA	NATIONAL ELECTRICAL MANUFACTURERS ASSOC.
NO.(#)	NUMBER
N.T.S.	NOT TO SCALE
OBIF	OPTICAL BASEBAND INTERFACE
OH	OVERHEAD
O.C.	ON CENTER
OPNG.	OPENING
P	POLE
P/C	PRECAST CONCRETE
PCS	PERSONAL COMMUNICATION SERVICES
PH	PHASE
PLY.	PLYWOOD
PNLBD	PANELBOARD
PPC	POWER PROTECTION CABINET
PRC	PRIMARY RADIO CABINET
PRI	PRIMARY
P.S.F.	POUNDS PER SQUARE FOOT
P.S.I.	POUNDS PER SQUARE INCH
P.T.	PRESSURE TREATED
PWR.	POWER (CABINET)
QTY.	QUANTITY
RAD.(R)	RADIUS
RBS	RADIO BASE STATION (BASE STATION 3G NETWORKS)
RCPT.	RECEPTACLE
REF.	REFERENCE
REINF.	REINFORCEMENT(ING)
REQ'D.	REQUIRED
RGS.	RIGID GALVANIZED STEEL
RRU	REMOTE RADIO UNIT (RADIO TRANSCEIVER)
RX–AIT	RECEIVER AIR INTERFACE TRAY
SAF	SAFETY
SCH.	SCHEDULE
SDBC	SOFT DRAWN BARE COPPER
SEC	SECONDARY
SHT.	SHEET
SIM.	SIMILAR
S.N.	SOLID NEUTRAL
SPEC.	SPECIFICATION(S)
SQ.	SQUARE
S.S.	STAINLESS STEEL
STD.	STANDARD
STL.	STEEL
STRUC.	STRUCTURAL
SURF	SURFACE
SW	SWITCH
TEL.	TELEPHONE
TEMP.	TEMPORARY
THK.	THICK(NESS)
TMAS	TOWER MOUNTED AMPLIFIER (DC SUPPLY VOLTAGE)
T.N.	TOE NAIL
T.O.A.	TOP OF ANTENNA
T.O.C.	TOP OF CURB
T.O.F.	TOP OF FOUNDATION
T.O.P.	TOP OF PLATE (PARAPET)
T.O.S.	TOP OF STEEL
T.O.W.	TOP OF WALL
TYP.	TYPICAL
U.G.	UNDER GROUND
U.L.	UNDERWRITERS LABORATORY INC.
UMTS	UNIVERSAL MOBIL TECH. SYS. (3G MOBILE TECH.)
U.N.O.	UNLESS NOTED OTHERWISE
V	VOLT
VAC	VOLT ALTERNATING CURRENT
V.I.F.	VERIFY IN FIELD
W	WATT OR WIRE
WD	WIDE(WIDTH)
W/	WITH
W/O	WITHOUT
WD.	WOOD
W.P.	WEATHERPROOF
WT.	WEIGHT
XFER	TRANSFER
XFMR	TRANSFORMER
XLPE	CROSS–LINK POLYETHYLENE
℄	CENTERLINE
⅊	PLATE, PROPERTY LINE

ABBREVIATIONS

2

NOTES FOR EXISTING AT&T CELL SITES:

1. PRIOR TO THE SUBMISSION OF BIDS, THE BIDDING SUBCONTRACTOR SHALL VISIT THE CELL SITE TO FAMILIARIZE WITH THE EXISTING CONDITIONS AND TO CONFIRM THAT THE WORK CAN BE ACCOMPLISHED AS SHOWN ON THE CONSTRUCTION DRAWINGS. ANY DISCREPANCY FOUND SHALL BE BROUGHT TO THE ATTENTION OF CONTRACTOR.

2. SUBCONTRACTOR SHALL VERIFY ALL EXISTING DIMENSIONS AND CONDITIONS PRIOR TO COMMENCING ANY WORK. ALL DIMENSIONS OF EXISTING CONSTRUCTION SHOWN ON THE DRAWINGS MUST BE VERIFIED. SUBCONTRACTOR SHALL NOTIFY THE CONTRACTOR OF ANY DISCREPANCIES PRIOR TO ORDERING MATERIAL OR PROCEEDING WITH CONSTRUCTION.

3. THE EXISTING CELL SITE IS IN FULL COMMERCIAL OPERATION. ANY CONSTRUCTION WORK BY SUBCONTRACTOR SHALL NOT DISRUPT THE EXISTING NORMAL OPERATION. ANY WORK ON EXISTING EQUIPMENT MUST BE COORDINATED WITH CONTRACTOR. ALSO, WORK SHOULD BE SCHEDULED FOR AN APPROPRIATE MAINTENANCE WINDOW USUALLY IN LOW TRAFFIC PERIODS AFTER MIDNIGHT.

4. SINCE THE CELL SITE IS ACTIVE, ALL SAFETY PRECAUTIONS MUST BE TAKEN WHEN WORKING AROUND HIGH LEVELS OF ELECTROMAGNETIC RADIATION. EQUIPMENT SHOULD BE SHUTDOWN PRIOR TO PERFORMING ANY WORK THAT COULD EXPOSE THE WORKERS TO DANGER. PERSONAL RF EXPOSURE MONITORS ARE ADVISED TO BE WORN TO ALERT OF ANY DANGEROUS EXPOSURE LEVELS.

5. SUBCONTRACTOR SHALL DETERMINE ACTUAL ROUTING OF CONDUIT, POWER AND T1 CABLES, GROUNDING CABLES AS SHOWN ON THE POWER, GROUNDING AND TELCO PLAN DRAWING. SUBCONTRACTOR SHALL UTILIZE EXISTING TRAYS AND/OR SHALL ADD NEW TRAYS AS NECESSARY. SUBCONTRACTOR SHALL CONFIRM THE ACTUAL ROUTING WITH THE CONTRACTOR.

6. SUBCONTRACTOR SHALL LEGALLY AND PROPERLY DISPOSE OF ALL SCRAP MATERIALS SUCH AS COAXIAL CABLES AND OTHER ITEMS REMOVED FROM THE EXISTING FACILITY. ANTENNAS REMOVED SHALL BE RETURNED TO THE OWNER'S DESIGNATED LOCATION.

EXISTING AT&T CELL SITE NOTES

3

1. THE FACILITY IS AN UNOCCUPIED DIGITAL TELECOMMUNICATION FACILITY.

2. PLANS ARE NOT TO BE SCALED AND ARE INTENDED TO BE A DIAGRAMMATIC OUTLINE ONLY, UNLESS NOTED OTHERWISE. THE WORK SHALL INCLUDE FURNISHING MATERIALS, EQUIPMENT, APPURTENANCES AND LABOR NECESSARY TO COMPLETE ALL INSTALLATIONS AS INDICATED ON THE DRAWINGS.

3. PRIOR TO THE SUBMISSION OF BIDS, THE CONTRACTORS SHALL VISIT THE JOB SITE AND BE RESPONSIBLE FOR ALL CONTRACT DOCUMENTS, FIELD CONDITIONS AND DIMENSIONS, AND CONFIRMING THAT THE WORK MAY BE ACCOMPLISHED AS SHOWN PRIOR TO PROCEEDING WITH CONSTRUCTION. ANY DISCREPANCIES ARE TO BE BROUGHT TO THE ATTENTION OF THE IMPLEMENTATION ENGINEER AND ENGINEER PRIOR TO PROCEEDING WITH THE WORK.

4. THE CONTRACTOR SHALL OBTAIN, IN WRITING, AUTHORIZATION TO PROCEED BEFORE STARTING WORK ON ANY ITEM NOT CLEARLY DEFINED OR IDENTIFIED BY THE CONTRACT DOCUMENTS.

5. THE CONTRACTOR SHALL INSTALL ALL EQUIPMENT AND MATERIALS IN ACCORDANCE WITH MANUFACTURER'S RECOMMENDATIONS UNLESS SPECIFICALLY INDICATED OTHERWISE OR WHERE LOCAL CODES OR REGULATIONS TAKE PRECEDENCE.

6. ALL WORK PERFORMED AND MATERIALS INSTALLED SHALL BE IN STRICT ACCORDANCE WITH ALL APPLICABLE CODES, REGULATIONS AND ORDINANCES. CONTRACTOR SHALL GIVE ALL NOTICES AND COMPLY WITH ALL LAWS, ORDINANCES, RULES, REGULATIONS AND LAWFUL ORDERS OF ANY PUBLIC AUTHORITY REGARDING THE PERFORMANCE OF THE WORK. MECHANICAL AND ELECTRICAL SYSTEMS SHALL BE INSTALLED IN ACCORDANCE WITH ALL APPLICABLE MUNICIPAL AND UTILITY COMPANY SPECIFICATIONS, AND LOCAL AND STATE JURISDICTIONAL CODES, ORDINANCES AND APPLICABLE REGULATIONS

7. THE GENERAL CONTRACTOR SHALL SUPERVISE AND DIRECT THE WORK, USING THE BEST SKILLS AND ATTENTION. THE CONTRACTOR SHALL BE SOLELY RESPONSIBLE FOR ALL CONSTRUCTION MEANS, METHODS, TECHNIQUES, SEQUENCES AND PROCEDURES AND FOR COORDINATING ALL PORTIONS OF THE WORK UNDER THE CONTRACT INCLUDING CONTACT AND COORDINATION WITH THE IMPLEMENTATION ENGINEER AND WITH THE LANDLORD'S AUTHORIZED REPRESENTATIVE.

8. SEAL PENETRATIONS THROUGH FIRE RATED AREAS WITH U.L. LISTED AND FIRE CODE APPROVED MATERIALS

9. PROVIDE A PORTABLE FIRE EXTINGUISHER WITH A RATING OF NOT LESS THAN 2–A OR 2–A10BC WITHIN 75 FEET TRAVEL DISTANCE TO ALL PORTIONS OF THE PROJECT AREA DURING CONSTRUCTION.

10. DETAILS ARE INTENDED TO SHOW END RESULT OF DESIGN. MINOR MODIFICATIONS MAY BE REQUIRED TO SUIT JOB DIMENSIONS OR CONDITIONS, AND SUCH MODIFICATIONS SHALL BE INCLUDED AS PART OF THE WORK.

11. REPRESENTATIONS OF TRUE NORTH, OTHER THAN THOSE FOUND ON THE PLOT OF SURVEY DRAWING (SHEET LS1 OR SHEET C–1), SHALL NOT BE USED TO IDENTIFY OR ESTABLISH THE BEARING OF TRUE NORTH AT THE SITE. THE CONTRACTOR SHALL RELY SOLELY ON THE PLOT OF SURVEY DRAWING AND ANY SURVEYOR'S MARKINGS AT THE SITE FOR THE ESTABLISHMENT OF TRUE NORTH, AND SHALL NOTIFY THE ENGINEER PRIOR TO PROCEEDING WITH THE WORK IF ANY DISCREPANCY IS FOUND BETWEEN THE VARIOUS ELEMENTS OF THE WORKING DRAWINGS AND THE TRUE NORTH ORIENTATION AS DEPICTED ON THE CIVIL SURVEY. THE CONTRACTOR SHALL ASSUME SOLE LIABILITY FOR ANY FAILURE TO NOTIFY THE ENGINEER.

12. THE CONTRACTOR SHALL MAKE NECESSARY PROVISIONS TO PROTECT EXISTING IMPROVEMENTS, PAVING, CURBS, VEGETATION, GALVANIZED SURFACES, ETC., AND UPON COMPLETION OF WORK REPAIR ANY DAMAGE THAT OCCURRED DURING CONSTRUCTION TO THE SATISFACTION OF AT&T.

13. KEEP GENERAL AREA CLEAN, HAZARD FREE, AND DISPOSE OF ALL DIRT, DEBRIS, RUBBISH AND REMOVE EQUIPMENT NOT SPECIFIED AS REMAINING ON THE PROPERTY. LEAVE PREMISES IN CLEAN CONDITION AND FREE FROM PAINT SPOTS, DUST OR SMUDGES OF ANY NATURE.

14. PENETRATIONS OF ROOF MEMBRANES SHALL BE PATCHED/FLASHED AND MADE WATERTIGHT USING LIKE MATERIALS IN ACCORDANCE WITH NRCA ROOFING STANDARDS AND DETAILS. CONTRACTOR SHALL OBTAIN DETAILING CLARIFICATION FOR SITE–SPECIFIC CONDITIONS FROM ENGINEER. IF NECESSARY, BEFORE PROCEEDING.

15. BEFORE ORDERING AND/OR BEFORE FABRICATING/CONSTRUCTING/INSTALLING ANY ITEMS, VERIFY THE TYPES AND QUANTITIES.

16. CONTRACTOR SHALL PROVIDE SITE FOREMAN WITH A CELLULAR PHONE AND PAGER, AND KEEP SAME ON SITE WHENEVER PERSONNEL ARE ON SITE

17. THE CONTRACTOR SHALL VERIFY ALL DIMENSIONS AND CONDITIONS ON THE SITE AND NOTIFY THE PROJECT MANAGER OF ANY DISCREPANCIES BEFORE STARTING ANY WORK.

18. CONTRACTOR TO PROVIDE COMPLETE SET OF AS BUILT DRAWINGS WITHIN 10 WORKING DAYS OF PROJECT COMPLETION.

19. CONTRACTOR IS TO EXCAVATE 6" BELOW EXISTING GRADE AND SPRAY WITH WEED CONTROL. REPLACE WITH CLASS II AGGREGATE BASE AND CRUSHED WASHED ROCK. AS SPECIFIED ON SITE PLAN.

20. CONTRACTOR SHALL PROVIDE TOILET FACILITY DURING ALL PHASES OF CONSTRUCTION.

21. PRIOR TO THE COMMENCEMENT OF CONSTRUCTION OR THE FABRICATION OF MATERIALS TO BE INSTALLED AT THE SITE, THE CONTRACTOR SHALL FIELD VERIFY ALL DIMENSIONS INCLUDING AS–BUILT DIMENSIONS OF EXISTING STRUCTURES OR STRUCTURAL ELEMENTS HAVING A BEARING ON THE SCOPE OF THE WORK TO BE PERFORMED. IF ANY DISCREPANCY IS FOUND BETWEEN THE VARIOUS ELEMENTS OF THE WORKING DRAWINGS AND THE DIMENSIONS OR CONDITIONS FOUND TO BE EXISTING IN THE FIELD, THE CONTRACTOR SHALL NOTIFY THE ENGINEER AND OBTAIN DESIGN RESOLUTION PRIOR TO PROCEEDING WITH THE PORTION(S) OF THE WORK AFFECTED. THE CONTRACTOR SHALL ASSUME SOLE LIABILITY FOR ANY FAILURE TO SO NOTIFY THE ENGINEER AND OBTAIN RESOLUTION BEFORE PROCEEDING.

GENERAL NOTES

4

at&t

ERICSSON
330 COMMERCE, STE. 200
IRVINE, CA 92602

M SQUARED WIRELESS
1397 CALLE AVANZADO
SAN CLEMENTE CA 92673 (949) 361-4024

DRAWN BY:	AS
CHECKED BY:	MM

REV	DATE	DESCRIPTION
C	07/17/2018	REVISION
B	03/14/2018	100% CONSTRUCTION
A	12/26/2017	90% CONSTRUCTION

REGISTERED PROFESSIONAL ENGINEER
LOYALL A. WHARTON
C50547
CIVIL
STATE OF CALIFORNIA

IT IS A VIOLATION OF LAW FOR ANY PERSON, UNLESS THEY ARE ACTING UNDER THE DIRECTION OF A LICENSED PROFESSIONAL ENGINEER, TO ALTER THIS DOCUMENT.

SITE ID: HBNPB 26C
1087 BAKER ST.
COSTA MESA, CA, 92626

SHEET TITLE
GENERAL NOTES

SHEET NUMBER
GN-1

NOTE:
1. IF DIMENSIONS SHOWN ON PLAN DO NOT SCALE CORRECTLY, CHECK FOR REDUCTION OR ENLARGEMENT FROM ORIGINAL PLANS.
2. UTILITY DESIGN & RUNS ARE PRELIMINARY. PENDING FINAL DESIGN FROM UTILITY PROVIDERS.
3. CONTRACTORS TO VERIFY SUB STRUCTURE LOCATIONS PRIOR TO ANY EXCAVATION.
4. ALL CONDUCTORS/ WIRES & CONDUIT, SHALL BE INSTALLED IN A NEAT 7 TIDY FASHION. ALL EXCESS WIRE SLACK IS TO BE REMOVED & HIDDEN AS MUCH AS POSSIBLE.
5. ALL NEWLY INSTALLED EQUIPMENT SHALL BE PAINTED TO MATCH EXISTING POLE, & OR SURROUNDINGS UNLESS PROHIBITED PER MANUFACTURER.

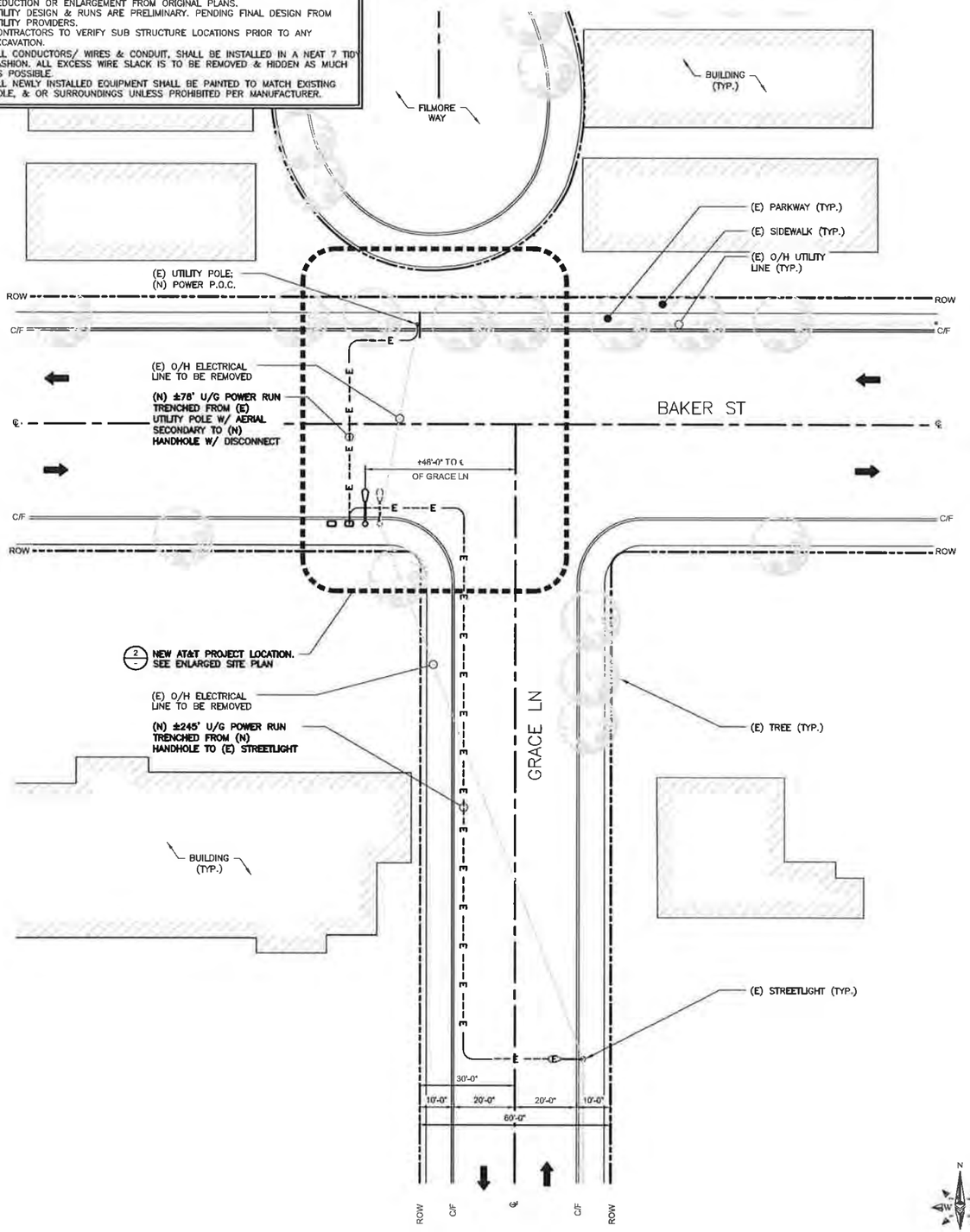

SITE PLAN

24"x36" SCALE: 1" = 20'-0"
11"x17" SCALE: 1" = 40'-0"
0" 10' 20' 40'

1

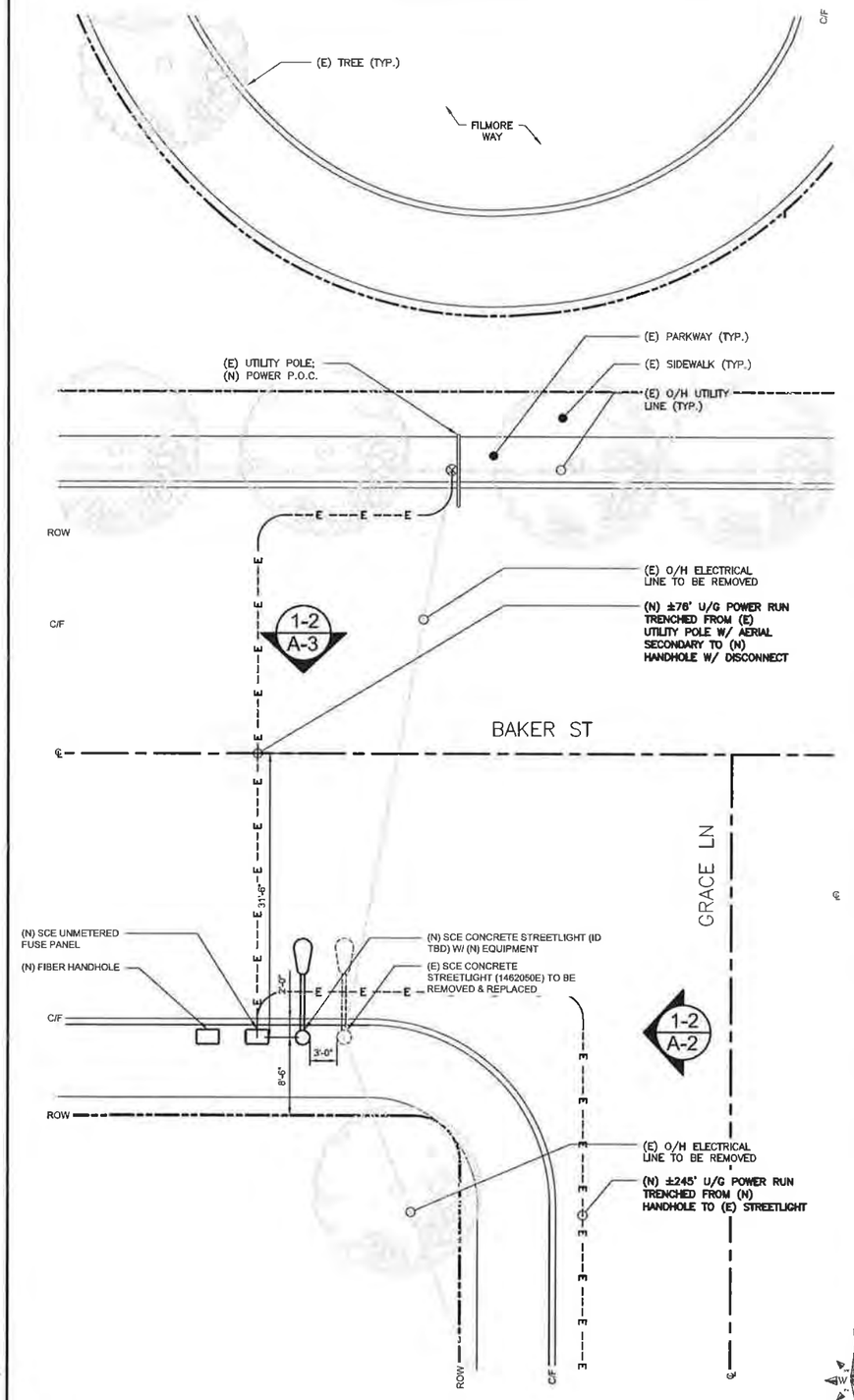

ENLARGED SITE PLAN

24"x36" SCALE: 1/8" = 1'-0"
11"x17" SCALE: 1/16" = 1'-0"
0" 4' 8' 16'

2

at&t

ERICSSON
330 COMMERCE, STE. 200
IRVINE, CA 92602

M SQUARED WIRELESS
1387 CALLE AVANZADO
SAN CLEMENTE CA 92673 (949) 361-8824

DRAWN BY:	AS
CHECKED BY:	MM

REV	DATE	DESCRIPTION
C	07/17/2018	REVISION
B	03/14/2018	100% CONSTRUCTION
A	12/26/2017	90% CONSTRUCTION

REGISTERED PROFESSIONAL ENGINEER
LOYALL A. WHARTON
C50547
CIVIL
STATE OF CALIFORNIA

IT IS A VIOLATION OF LAW FOR ANY PERSON, UNLESS THEY ARE ACTING UNDER THE DIRECTION OF A LICENSED PROFESSIONAL ENGINEER, TO ALTER THIS DOCUMENT.

SITE ID: HBNPB 26C
1087 BAKER ST.
COSTA MESA, CA, 92626

SHEET TITLE
SITE PLAN

SHEET NUMBER
A-1

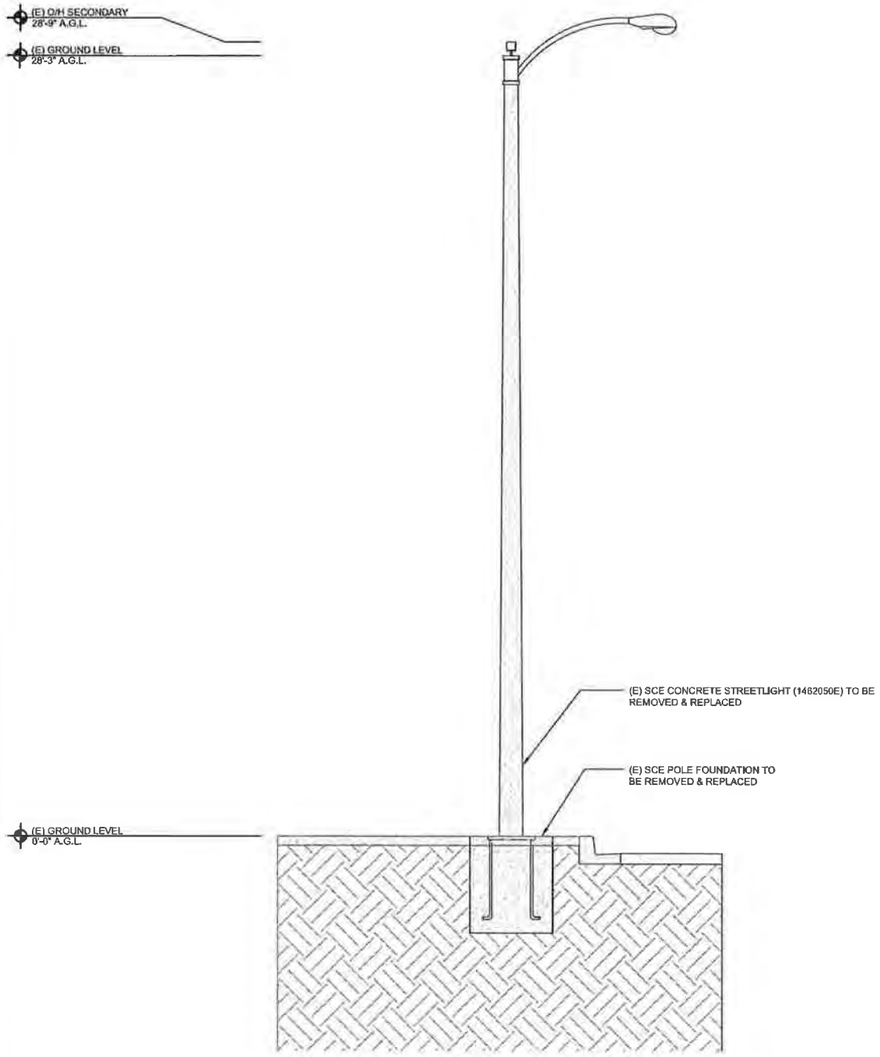

EXISTING EAST ELEVATION

24"x36" SCALE: 1/4" = 1'-0"
11"x17" SCALE: 1/8" = 1'-0"

0" 2' 4' 8'

2

NOTE:
ALL NEW EQUIPMENT SHALL BE PAINTED TO MATCH NEW UTILITY POLE

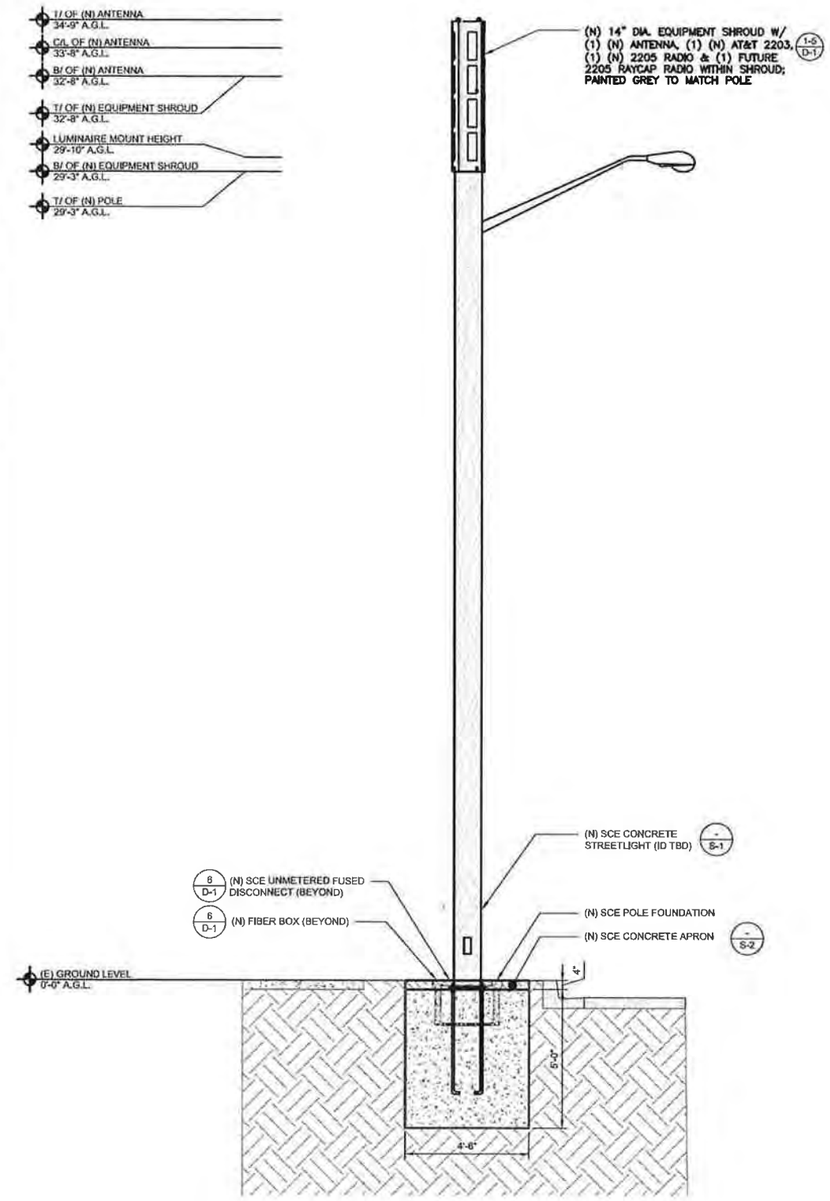

NEW EAST ELEVATION

24"x36" SCALE: 1/4" = 1'-0"
11"x17" SCALE: 1/8" = 1'-0"

0" 2' 4' 8'

1

at&t

ERICSSON
330 COMMERCE, STE. 200
IRVINE, CA 92602

M SQUARED WIRELESS
1387 CALLE AVANZADO
SAN CLEMENTE CA 92673 (949) 391-6234

DRAWN BY:	AS
CHECKED BY:	MM

REV	DATE	DESCRIPTION
C	07/17/2018	REVISION
B	03/14/2018	100% CONSTRUCTION
A	12/26/2017	90% CONSTRUCTION

REGISTERED PROFESSIONAL ENGINEER
LOYALL A. WHARTON
C50547
CIVIL
STATE OF CALIFORNIA

IT IS A VIOLATION OF LAW FOR ANY PERSON, UNLESS THEY ARE ACTING UNDER THE DIRECTION OF A LICENSED PROFESSIONAL ENGINEER, TO ALTER THIS DOCUMENT.

SITE ID: HBNPB 26C
1087 BAKER ST.
COSTA MESA, CA, 92626

SHEET TITLE
ELEVATIONS

SHEET NUMBER
A-2

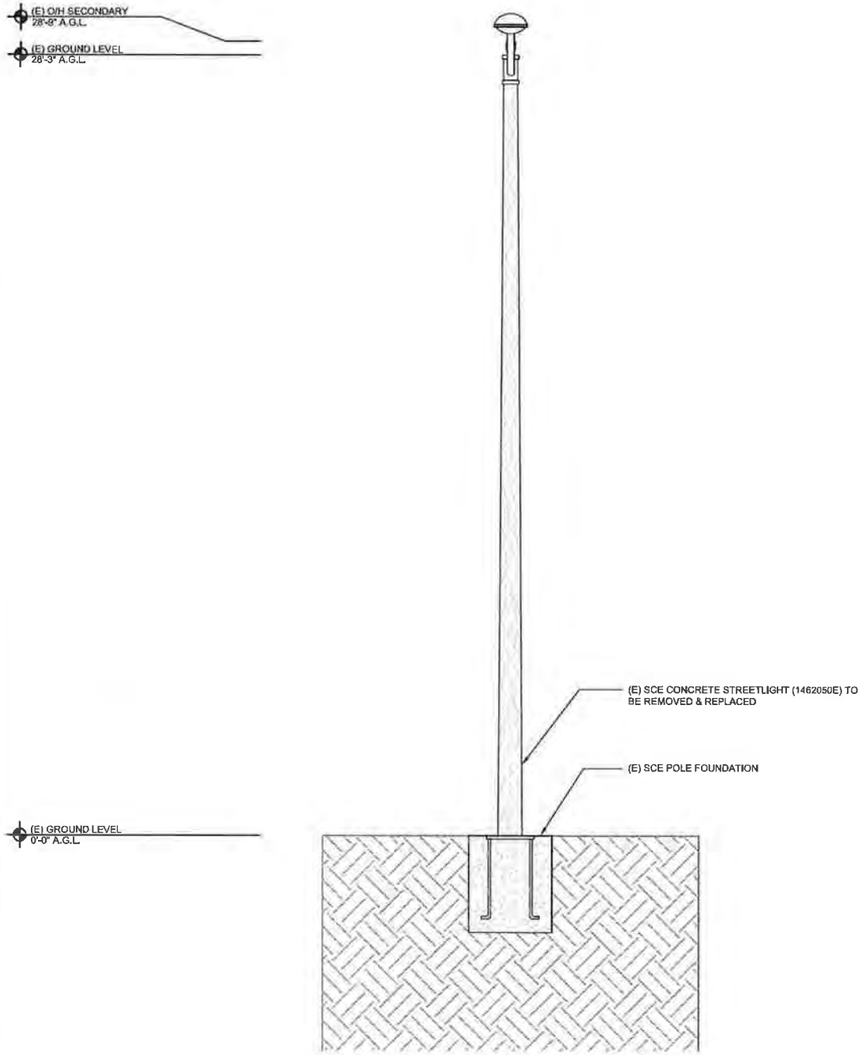

EXISTING NORTH ELEVATION

24"x36" SCALE: 3/8" = 1'-0"
11"x17" SCALE: 3/16" = 1'-0"

0" 1' 2' 4'

2

NOTE:
ALL NEW EQUIPMENT SHALL BE PAINTED TO MATCH NEW UTILITY POLE

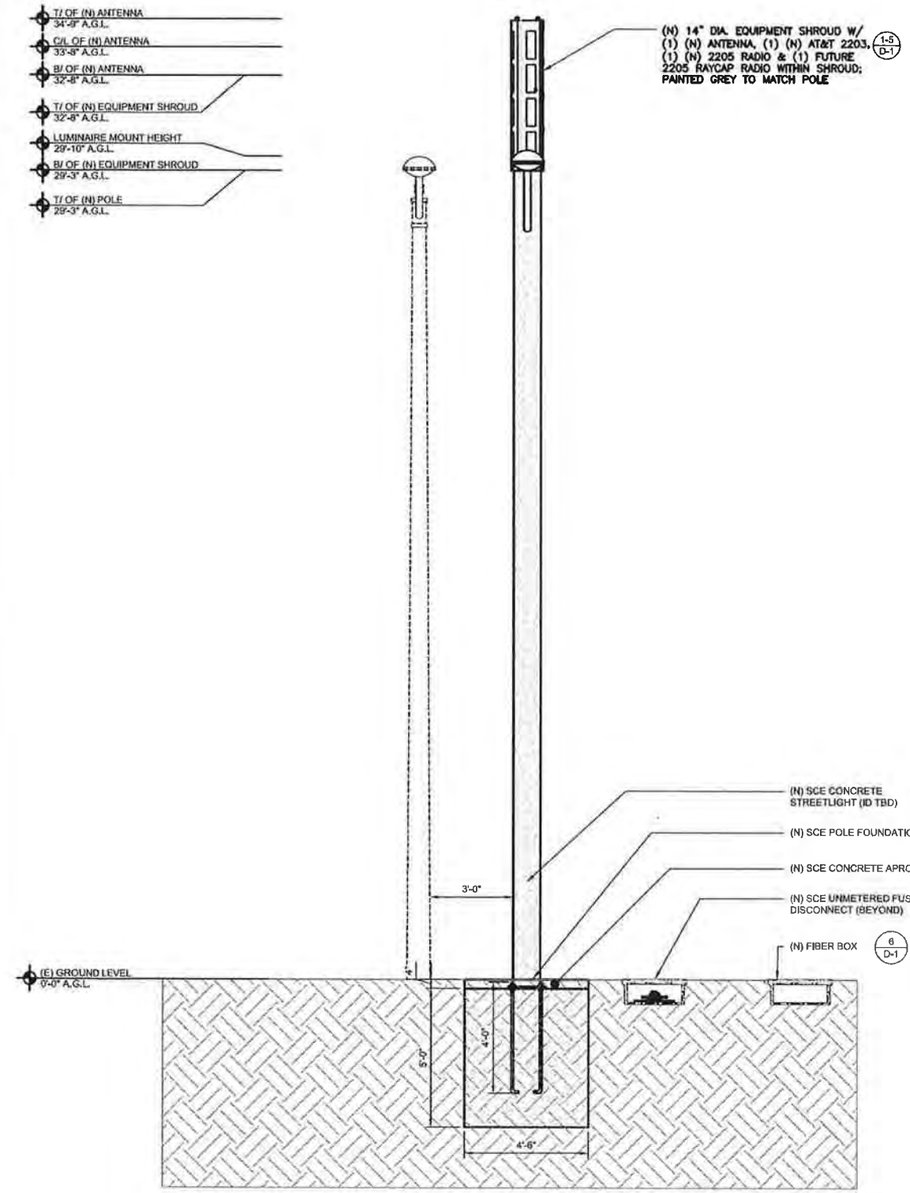

NEW NORTH ELEVATION

24"x36" SCALE: 3/8" = 1'-0"
11"x17" SCALE: 3/16" = 1'-0"

0" 1' 2' 4'

1

at&t

ERICSSON
330 COMMERCE, STE. 200
IRVINE, CA 92602

M SQUARED WIRELESS
1387 CALLE AVANZADO
SAN CLEMENTE CA 92673 (949) 391-6634

DRAWN BY:	AS
CHECKED BY:	MM

REV	DATE	DESCRIPTION
C	07/17/2018	REVISION
B	03/14/2018	100% CONSTRUCTION
A	12/28/2017	90% CONSTRUCTION

REGISTERED PROFESSIONAL ENGINEER
LOYALL A. WHARTON
C50547
CIVIL
STATE OF CALIFORNIA

IT IS A VIOLATION OF LAW FOR ANY PERSON, UNLESS THEY ARE ACTING UNDER THE DIRECTION OF A LICENSED PROFESSIONAL ENGINEER, TO ALTER THIS DOCUMENT.

SITE ID: HBNPB 26C
1087 BAKER ST.
COSTA MESA, CA, 92626

SHEET TITLE
ELEVATIONS

SHEET NUMBER
A-3

PROPOSED SITE LOCATION LOOKING SOUTHWEST

1

at&t

ERICSSON
330 COMMERCE, STE. 200
IRVINE, CA 92602

M SQUARED WIRELESS
1387 CALLE AVANZADO
SAN CLEMENTE CA 92673 (949) 391-6924

DRAWN BY:	AS
CHECKED BY:	MM

REV	DATE	DESCRIPTION
C	07/17/2018	REVISION
B	03/14/2018	100% CONSTRUCTION
A	12/26/2017	90% CONSTRUCTION

REGISTERED PROFESSIONAL ENGINEER
LOYALL A. WHARTON
C50547
CIVIL
STATE OF CALIFORNIA

IT IS A VIOLATION OF LAW FOR ANY PERSON, UNLESS THEY ARE ACTING UNDER THE DIRECTION OF A LICENSED PROFESSIONAL ENGINEER, TO ALTER THIS DOCUMENT.

SITE ID: HBNPB 26C
1087 BAKER ST.
COSTA MESA, CA, 92626

SHEET TITLE
SITE IMAGE

SHEET NUMBER
A-4

AVAILABLE FROM EXCEL SIGN AND DECAL:
http://www.weneedsigns.com/home.php?cal+1135 AND CLICK ON AT&T
PH: 510-651-0445
N01-DC-16 1"X6" NOTICE DECAL
"For 1 Foot Distance" VINYL DECAL WITH ADHEDSIVE BACKING

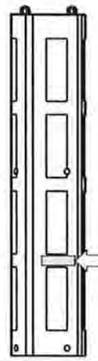

NOTICE

RF energy emitted by this device may exceed the FCC's general public exposure limits. Stay at least 1 foot away from the device.
Call 800-638-2822 for help if you need access within 1 foot

Place 3 NOTICE sticker at the bottom of the front of the radome of each antenna.

ANTENNA DISCLAIMER LABEL

24"x36" SCALE: NTS
11"x17" SCALE: NTS

7

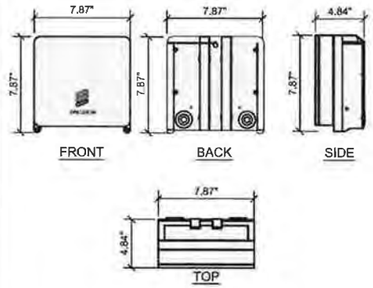

ERICSSON - MICRO RADIO 2205

MECHANICAL SPECIFICATIONS	
DIMENSIONS (WxDxH):	7.87"x4.84"x7.87", INCLUDING MOUNTING BRACKET AND ESTHETIC FRONT COVER
VOLUME AND WEIGHT:	4 LITRES AND < 4 kg (5.92 lbs)
MOUNTING:	WALL AND POLE MOUNT
INTERFACE SPECIFICATIONS:	
ANTENNA PORTS:	2 x 4.3-10(F)
CPRI:	2 x 2.5/5/10 Gbps (EXCHANGEABLE SFP MODULES)
OPTICAL INDICATORS:	6
EXTERNAL ALARM:	2
FIELD GROUND:	1
ELECTRICAL SPECIFICATIONS:	
POWER SUPPLY:	-48 VCD OR 100 -250 VAC
POWER OUTPUT:	97 WATTS MAX
MAX HEAT DISSIPATION:	90 WATTS
MINIMUM AC FUSE RATING:	6 AMP

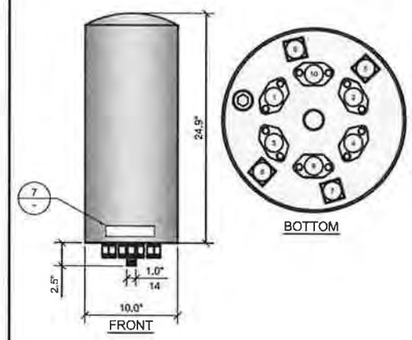

GALTRONICS (GQ2410-06621 PSEUDO OMNI CANISTER ANTENNA

MECHANICAL SPECIFICATIONS	
DIMENSIONS (HxD):	24.9 x 10 INCHES (643 x 256 mm)
WEIGHT EXCL MOUNTING BRACKETS:	17.2lbs (9 kg)
NO OF CONNECTORS	10 X 4.3-10 DIN FEMALE
CONNECTOR TYPE & FREQUENCY BAND (MHz):	4 X 4.3-10 DIN FEMALE (1695-2360) MHz
	4 X 4.3-10 DIN FEMALE (3550-3700) MHz
	2 X 4.3-10 DIN FEMALE (5150-5850) MHz
MAX WIND SPEED:	150 mph
RADOME MATERIAL:	ASA
SHIPPING DIMS (LxWxD):	30"X19"X19" (762x483x483mm)
GROSS SHIPPING WEIGHT:	28 lbs (12kg)

PART NO GQ2410-06621-11 (GRAY)
PART NO. GQ2410-06621-611 (BROWN)
PART NO. GQ2410-06621-811 (CHROME)

ERICSSON - RADIO 2205

24"x36" SCALE: NTS
11"x17" SCALE: NTS

4

GALTRONICS OMNI ANTENNA

24"x36" SCALE: NTS
11"x17" SCALE: NTS

1

ELECTROMATE HINGED 3R ENCLOSURE	
DIMENSIONS:	
A	12"
B	12"
C	6"

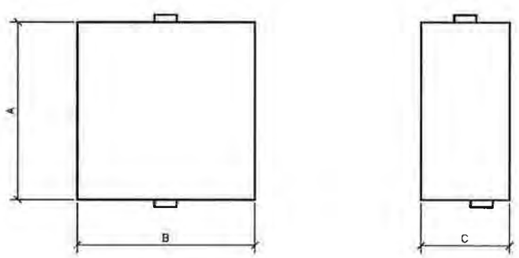

SCE UN-METERED FUSED PANEL

24"x36" SCALE: NTS
11"x17" SCALE: NTS

8

RAYCAP - RSCAC-0533-R-120-D

ELECTRICAL	
SURGE PROTECTION DEVICE (SPD) TYPE TO UL: STRIKESORB 30-A	
NUMBER OF CIRCUITS PROTECTED: 4	
SURGE PROTECTIVE DEVICE (SPD) TYPE PER UL 1449 4TH EDITION: TYPE 2 COMPONENT ASSEMBLY	
SURGE PROTECTION DEVICE (SPD) CLASS TO IEC 61643-11: CLASS II	
NOMINAL OPERATING VOLTAGE [UN]: 120 V	
NOMINAL DISCHARGE CURRENT [In] PER UL 1449 4TH EDITION: 20 KA 8/20 MS	
MAXIMUM DISCHARGE CURRENT [IMAX] PER IEC 61643-11: 60 KA 8/20 MS	
MAXIMUM CONTINUOUS OPERATING VOLTAGE [UC] (MCOV) 150V	
VOLTAGE PROTECTION LEVEL [UP] PER IEC 61643-11: 700V	
VOLTAGE PROTECTION RATING (VPR): 20 KA 8/20	
SUPPRESSION TECHNOLOGY: MOV	
PROTECTION MODES (DUAL MODE): LINE TO NEUTRAL, NEUTRAL TO GROUND	
STRIKESORB MODULES ARE COMPLIANT TO THE FOLLOWING SURGE PROTECTIVE DEVICE (SPD) STANDARDS: UL 1449 4TH EDITION 2015, IEC 61643-11: 2011 EN 61643-11: 2012, IEEE C62.41.2-2002, IEEE C62.45-2002, NEMA LS-1 CERTIFICATION UL VOE CP	
MECHANICAL	
CONNECTION TERMINAL:	COMPRESSION LUG #6 - #14 AWG (13 - 2MM2) TERMINAL BLOCK #10-#20 AWG (6 - 0.14MM2)
ENVIRONMENTAL INGRESS PROTECTION (IP) RATING:	NEMA 4X
OPERATION TEMPERATURE:	(°C) -40° C TO +80° C
STORAGE TEMPERATURE:	(°C) -70° C TO +80° C
ENCLOSURE TYPE (OUTDOOR) POLYCARBONATE:	UL 94V-0 RATED
ENCLOSURE DIMENSIONS:	(L x W x H) 8.58" X 5.06" X 10.08" [217 x 128 x 256 MM]
WEIGHT:	2.25 LBS [1 02KG]

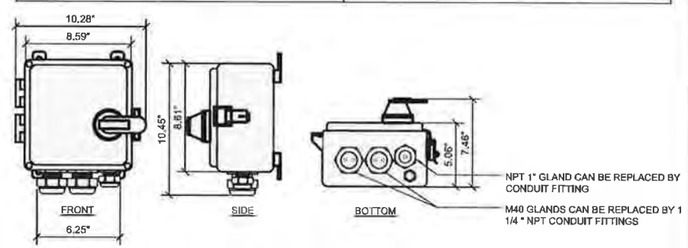

RAYCAP DISCONNECT

24"x36" SCALE: NTS
11"x17" SCALE: NTS

5

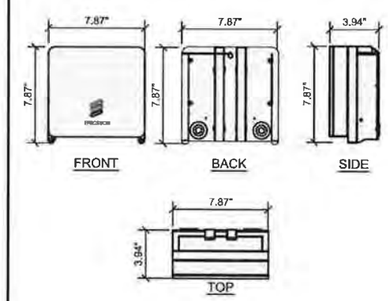

ERICSSON - MICRO RADIO 2203

MECHANICAL SPECIFICATIONS	
DIMENSIONS (WxDxH):	7.87"x3.94"x7.87", INCLUDING MOUNTING BRACKET AND ESTHETIC FRONT COVER
VOLUME AND WEIGHT:	4 LITRES AND < 4.8 kg (5.92 lbs)
MOUNTING:	WALL AND POLE MOUNT
INTERFACE SPECIFICATIONS:	
ANTENNA PORTS:	2 x 4.3-10(F)
CPRI:	2 x 2.5/5/10 Gbps (EXCHANGEABLE SFP MODULES)
OPTICAL INDICATORS:	6
EXTERNAL ALARM:	2
FIELD GROUND:	1
ELECTRICAL SPECIFICATIONS:	
POWER SUPPLY:	-48 VCD OR 100 -250 VAC
POWER OUTPUT:	97 WATTS MAX
MAX HEAT DISSIPATION:	90 WATTS
MINIMUM AC FUSE RATING:	6 AMP

ERICSSON - RADIO 2203

24"x36" SCALE: NTS
11"x17" SCALE: NTS

2

SQUARE-D HINGED 3R ENCLOSURE # D221NRB	
DIMENSIONS:	
A	7.75"
B	9.63"
C	3.75"

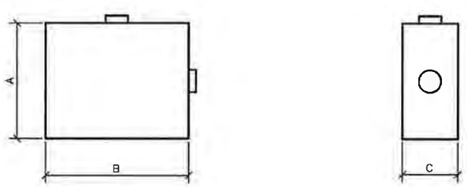

AT&T MOBILITY FUSED DISCONNECT

24"x36" SCALE: NTS
11"x17" SCALE: NTS

9

COVER FEATURES:
- STANDARD LOAD RATING: 20,800 LBS. WHEEL LOAD ON 10"x20" PLATE
- 2 BOLT DOWN LOCATIONS
- STAINLESS STEEL BOX INSERTS
- POLYMER CONCRETE CONSTRUCTION
- NON-SKID SURFACE STANDARD
- 20K TO BE EMBOSSED ON COVER
- APPROXIMATE WEIGHT = 120 LBS.

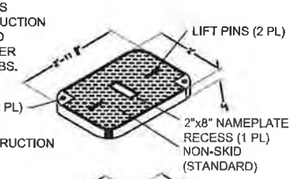

COVER FEATURES:
- POLYMER CONCRETE CONSTRUCTION
- LIGHTWEIGHT
- STACKABLE FOOT
- APPROX. WEIGHT 188 LBS.

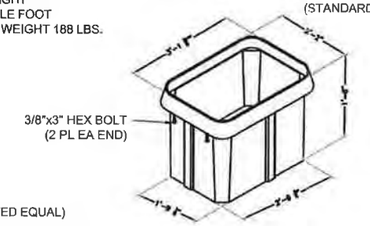

(OR APPROVED EQUAL)

HANDHOLE

24"x36" SCALE: NTS
11"x17" SCALE: NTS

6

CONCEALFAB CONCEALMENT POLE TOP EQUENTRIC

MECHANICAL SPECIFICATIONS	
DIMENSIONS (WxDxH):	65"x8"14"
MOUNTING:	MOUNTS TO TOP OF POLE

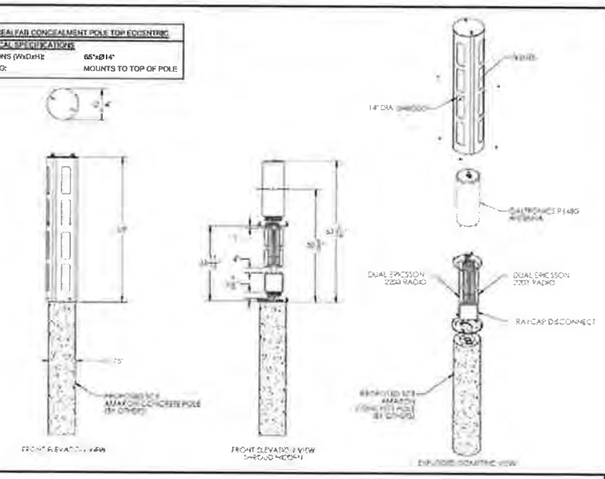

EQUIPMENT SHROUD

24"x36" SCALE: NTS
11"x17" SCALE: NTS

3

at&t

ERICSSON
330 COMMERCE, STE. 200
IRVINE, CA 92602

M SQUARED WIRELESS
1387 CALLE AVANZADO
SAN CLEMENTE CA 92673 (949) 391-6634

DRAWN BY:	AS
CHECKED BY:	MM

REV	DATE	DESCRIPTION
C	07/17/2018	REVISION
B	03/14/2018	100% CONSTRUCTION
A	12/28/2017	90% CONSTRUCTION

REGISTERED PROFESSIONAL ENGINEER
LOYALL A. WHARTON
C50547
CIVIL
STATE OF CALIFORNIA

IT IS A VIOLATION OF LAW FOR ANY PERSON, UNLESS THEY ARE ACTING UNDER THE DIRECTION OF A LICENSED PROFESSIONAL ENGINEER, TO ALTER THIS DOCUMENT.

SITE ID: HBNPB 26C
1087 BAKER ST.
COSTA MESA, CA, 92626

SHEET TITLE
DETAILS

SHEET NUMBER
D-1

FOR REFERENCE ONLY

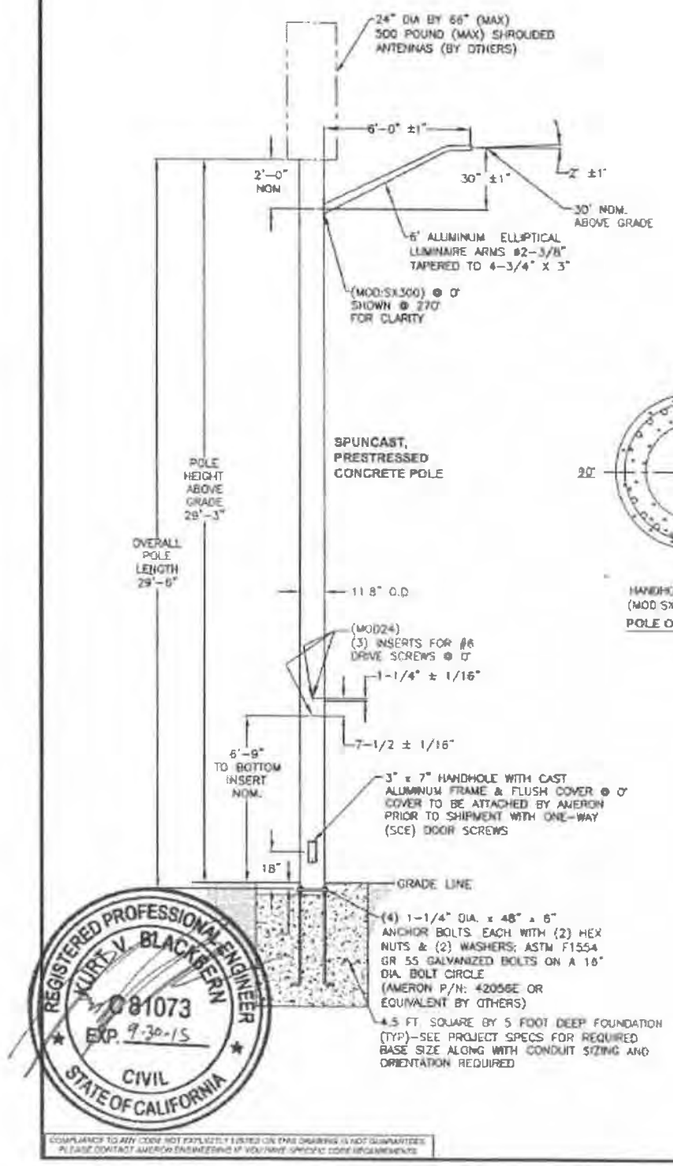

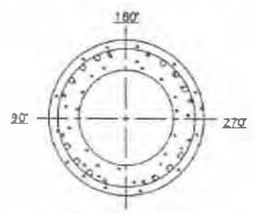

HANDHOLE, MOD24, &
(MOD:SX300) FOR LMA

POLE ORIENTATIONS

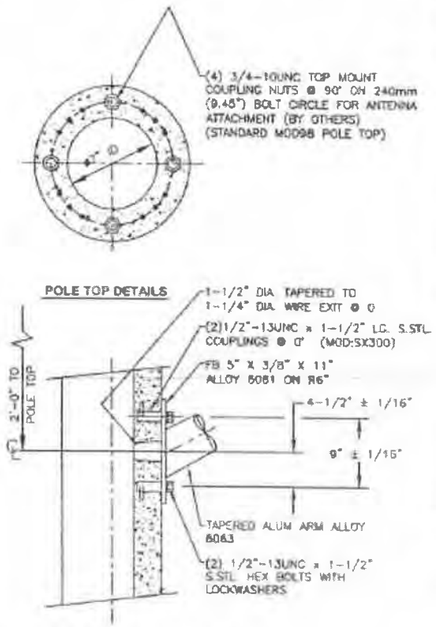

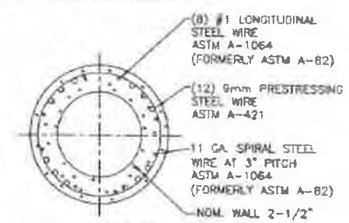

SECTION DETAILS

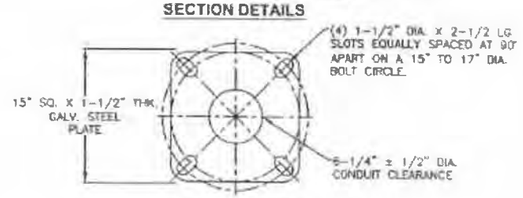

BASE PLATE DETAILS

REV.	DATE	DESCRIPTION	DRN.	APPR.
A	09/07	REDRAWN, ADDED POLE P/N	A.C.	
B	05/08	UPDATED FOR ORACLE	T.L.	
C	02/10	A/B WERE A36M55, NOW A307	J.C.	
D	06/15	UPDATED TO NEW DWG. STDS.	L.P.	

"F" LEVEL CONFIG CODES		
OPTION CLASS	ENTRY	INFO.
COATING	S	
HH COVER	66546E	
DOOR SCRS	SCE	
DRILL IN MOD	MOD24	

"P" LEVEL CONFIG CODES		
OPTION CLASS	ENTRY	INFO.
MIX	81	
FINISH	5	
BASEPLATE	63250E	
COLLAR	NONE	
POLE TOP CON.	MOD98	
CAST-IN MOD	MODSX300	

300MM NON-TAPERED BASE PLATE ROUND POLE

POLE DESIG-NATION	POLE HEIGHT ABOVE GRADE	OVERALL POLE LENGTH	BOLT CIRCLE	BASE O.D.	ULTIMATE G.L. MOMENT (ft.-lbs.)	POLE WEIGHT (lbs.)
BP300X09	29'-3"	29'-6"	16"	11-13/16"	65,000	2900

( ) POLES REQUIRED (P/N: BP300X09-16137), EACH WITH 6' WALL BRACKET ELLIPTICAL ARM (P/N: LAEB6A)

NOTES:

1. MIX (815S): SCE BLACK & WHITE, LIGHTLY EXPOSED AGGREGATE FINISH WITH FLAT WATER SEALER COATING.
2. ASTM C-150 TYPE III GRAY CEMENT.
3. f'c @ 28 DAYS=7,000 PSI, USING SPUN CYLINDER TEST.
4. f'c @ 28 DAYS=5,000 PSI, USING ASTM C-31 CYLINDER TEST.
5. POLES MANUFACTURED TO ASTM C-1089-13 SPECIFICATIONS.
6. PROTECTIVE COAT EXPOSED P.C. WIRES AT POLE ENDS
7. THE POLE DEPICTED ON THIS DRAWING IS DESIGNED TO WITHSTAND THE LOADS IMPARTED BY A SINGLE SIDE MOUNTED TAPERED ELLIPTICAL ALUMINUM ARM (NOT TO EXCEED 6' OFFSET, 3.7 SQ. FT. EPA, 25 LBS.) WITH THE ARM HOLDING A DOWNWARD FACING AREA OR PENDENT LUMINAIRE (NOT TO EXCEED 2.0 SQ. FT. EPA, 50 POUNDS); THE POLE ALSO SUPPORTS (1) ANTENNA SHROUD CENTERED 3' ABOVE THE POLE TOP (NOT TO EXCEED 6.3 SQ. FT. EPA, 225 LBS. MAX) AS DESIGNED PER THE 2013 AASHTO LTS-6 (CRITERIA FOR STREET LIGHTING POLES), 2010 CALIFORNIA BUILDING CODE & ASCE7-05 FOR 90 MPH WIND AND SEISMIC ZONE (3-SECOND GUSTS) & SEISMIC CRITERIA Ss=1.75 & S1=0.6. PLEASE CONTACT & ADVISE AMERON ENGINEERING IF THE INTENDED VALUES EXCEED THESE VALUES.
8. DUE TO THE NATURE & CHARACTERISTICS OF CONCRETE, SIDE MOUNT SPACING DIMENSIONS CAN ONLY BE TAKEN TO THE NEAREST 1/8 INCH.

APPROVED BY DATE

SOUTHERN CALIFORNIA EDISON
BP300X09 POLE WITH SINGLE 6' ARM

THIS DOCUMENT CONTAINS INFORMATION WHICH IS PROPRIETARY TO AMERON. IT SHALL NOT BE REPRODUCED, USED OR DISCLOSED TO ANYONE WITHOUT THE PRIOR WRITTEN PERMISSION OF AMERON.

AMERON POLE PRODUCTS

DRAWN: SJB	DATE: 10/2003	
SCALE: N.T.S.	DWG. NO. 040-01277	REV D

REGISTERED PROFESSIONAL ENGINEER KURT V. BLACKBERN C81073 EXP. 9-30-15 CIVIL STATE OF CALIFORNIA

COMPLIANCE TO ANY CODE NOT EXPLICITLY LISTED ON THIS DRAWING IS NOT GUARANTEED. PLEASE CONTACT AMERON ENGINEERING IF YOU HAVE SPECIFIC CODE REQUIREMENTS.

at&t

ERICSSON
330 COMMERCE, STE. 200
IRVINE, CA 92602

M SQUARED WIRELESS
1387 CALLE AVANZADO
SAN CLEMENTE CA 92673 (949) 361-6934

DRAWN BY: AS
CHECKED BY: MM

REV	DATE	DESCRIPTION
C	07/17/2018	REVISION
B	03/14/2018	100% CONSTRUCTION
A	12/26/2017	90% CONSTRUCTION

REGISTERED PROFESSIONAL ENGINEER LOYALL A. WHARTON C50547 CIVIL STATE OF CALIFORNIA

IT IS A VIOLATION OF LAW FOR ANY PERSON, UNLESS THEY ARE ACTING UNDER THE DIRECTION OF A LICENSED PROFESSIONAL ENGINEER, TO ALTER THIS DOCUMENT.

SITE ID: HBNPB 26C
1087 BAKER ST.
COSTA MESA, CA, 92626

SHEET TITLE
POLE DETAILS

SHEET NUMBER
S-1

FOR REFERENCE ONLY

SOUTHERN CALIFORNIA EDISON
An EDISON INTERNATIONAL Company

Underground Structures Standards

MC 890 Foundation Detail for Fiberglass Nostalgic, Fiberglass, Steel, or Concrete Electroliers

Scope MC 890.1 Electrolier Foundation Detail

Figure MC 890–1: Electrolier Foundation Detail

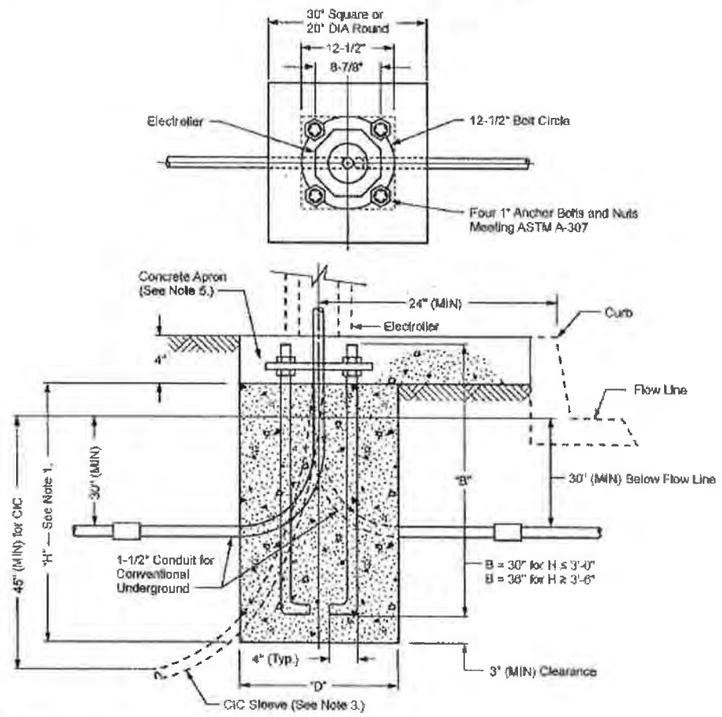

Note(s):

1. The footing depth will vary depending on the type of soil and wind loading requirements. Consult local government agency for requirements. See Table MC 890–1 (Sheet 3) through Table MC 890–4 (Sheet 4).
2. Foundation shall be installed after conduit or CIC (for Underground Service), curbs, and sidewalks are in place and grades are established.
3. 1-1/2" Plastic CIC Sleeve for UG Concrete Electrolier (tape both ends to prevent debris from entering the sleeve).
4. Concrete to reach a minimum compression strength of 2800 psi in 28 days. See UGS 20.3.
5. Place a minimum size concrete apron of 30" x 30" x 4" thick around the pole at the ground level to provide a constrained surface condition when required. Grout to be placed after pole is set and plumbed.

Approved by:	Foundation Detail for Fiberglass Nostalgic, Fiberglass, Steel, or Concrete Electroliers	MC 890
Effective Date: 10-26-2012	**What's Changed?** The acronym for the Miscellaneous Chapter of the UGS Manual has been changed from 'MS' to 'MC' for clarity.	Sheet 1 of 4
		UGS

▶ SCE Public ◀

SOUTHERN CALIFORNIA EDISON
An EDISON INTERNATIONAL Company

Underground Structures Standards

Scope MC 890.3 Electrolier Foundation Requirements

Table MC 890–1: 70 MPH Wind Zone, Constrained Surface Condition

Electrolier Foundation Requirements								
	Soil Type	Fiberglass, Concrete, or Steel				Nostalgic		
		23' Shaft		28' Shaft		All Poles	Fiberglass	Marbelite
	Per UBC[a]	H	D	H	D	H	D	D
I.	Massive Crystalline Bedrock	2'-6"	20" dia.	2'-6"	20" dia.	2'-6"	20" dia.	24" dia.
		2'-6"	30" x 30"	2'-6"	30" x 30"	2'-6"	30" x 30"	30" x 30"
II.	Sedimentary and Foliated Rock	2'-6"	20" dia.	2'-6"	20" dia.	2'-6"	20" dia.	24" dia.
		2'-6"	30" x 30"	2'-6"	30" x 30"	2'-6"	30" x 30"	30" x 30"
III.	Sandy Gravel, Gravel	3'-0"	20" dia.	3'-0"	20" dia.	3'-0"	20" dia.	24" dia
		2'-6"	30" x 30"	2'-6"	30" x 30"	2'-6"	30" x 30"	30" x 30"
IV.	Sand, Silty Sand, Clayey Sand, Silty Gravel, Clayey Gravel	3'-6"	20" dia.	3'-6"	20" dia.	3'-6"	20" dia.	24" dia.
		2'-6"	30" x 30"	2'-6"	30" x 30"	2'-6"	30" x 30"	30" x 30"
V.	Clay, Sands, Sandy Clay, Silty Clay, Clayey Silt	4'-0"	20" dia.	4'-6"	20" dia.	4'-0"	20" dia	24" dia.
		2'-6"	30" x 30"	3'-6"	30" x 30"	2'-6"	30" x 30"	30" x 30"

[a] Uniform Building Code — 1991

Note(s):

1. H = Depth of footing
2. D = Diameter of round footing or the side dimension of square footing.

Table MC 890–2: 70 MPH Wind Zone, Non-Constrained Surface Condition

Electrolier Foundation Requirements								
	Soil Type	Fiberglass, Concrete, or Steel				Nostalgic		
		23' Shaft		28' Shaft		All Poles	Fiberglass	Marbelite
	Per UBC[a]	H	D	H	D	H	D	D
I.	Massive Crystalline Bedrock	2'-6"	20" dia.	2'-6"	20" dia	2'-6"	20" dia.	24" dia.
		2'-6"	30" x 30"	2'-6"	30" x 30"	2'-6"	30" x 30"	30" x 30"
II.	Sedimentary and Foliated Rock	3'-0"	20" dia.	3'-6"	20" dia.	3'-0"	20" dia.	24" dia.
		2'-6"	30" x 30"	2'-6"	30" x 30"	2'-6"	30" x 30"	30" x 30"
III.	Sandy Gravel, Gravel	3'-6"	20" dia.	4'-0"	20" dia.	3'-6"	20" dia.	24" dia
		3'-0"	30" x 30"	3'-0"	30" x 30"	3'-0"	30" x 30"	30" x 30"
IV.	Sand, Silty Sand, Clayey Sand, Silty Gravel, Clayey Gravel	4'-0"	20" dia.	4'-6"	20" dia.	4'-0"	20" dia.	24" dia.
		3'-0"	30" x 30"	3'-6"	30" x 30"	3'-0"	30" x 30"	30" x 30"
V.	Clay, Sands, Sandy Clay, Silty Clay, Clayey Silt	4'-6"	20" dia.	5'-0"	20" dia.	4'-6"	20" dia.	24" dia.
		3'-6"	30" x 30"	4'-0"	30" x 30"	3'-6"	30" x 30"	30" x 30'

[a] Uniform Building Code — 1991

Note(s):

1. H = Depth of footing
2. D = Diameter of round footing or the side dimension of square footing.

Approved by:	Foundation Detail for Fiberglass Nostalgic, Fiberglass, Steel, or Concrete Electroliers	MC 890
Effective Date: 10-26-2012	**What's Changed?** The acronym for the Miscellaneous Chapter of the UGS Manual has been changed from 'MS' to 'MC' for clarity.	Sheet 3 of 4
		UGS

▶ SCE Public ◀

at&t

ERICSSON
330 COMMERCE, STE. 200
IRVINE, CA 92602

M SQUARED WIRELESS
1387 CALLE AVANZADO
SAN CLEMENTE CA 92673 (949) 201-6324

DRAWN BY:	AS
CHECKED BY:	MM

REV	DATE	DESCRIPTION
C	07/17/2018	REVISION
B	03/14/2018	100% CONSTRUCTION
A	12/26/2017	90% CONSTRUCTION

REGISTERED PROFESSIONAL ENGINEER
LOYALL A. WHARTON
C50547
CIVIL
STATE OF CALIFORNIA

IT IS A VIOLATION OF LAW FOR ANY PERSON, UNLESS THEY ARE ACTING UNDER THE DIRECTION OF A LICENSED PROFESSIONAL ENGINEER, TO ALTER THIS DOCUMENT.

SITE ID: HBNPB 26C
1087 BAKER ST.
COSTA MESA, CA, 92626

SHEET TITLE
POLE FOUNDATION DETAILS

SHEET NUMBER
S-2

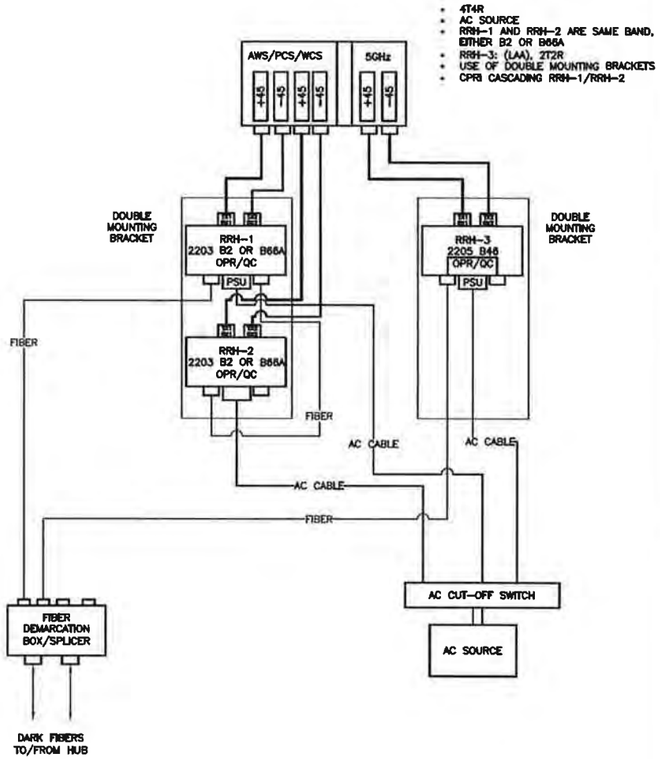

PICO PLUMBING DIAGRAM — 24"x36" SCALE: NTS / 11"x17" SCALE: NTS — 6

NOTE:
ALL GROUND CONDUCTORS TO BE #6 THHN/THWN GREEN STRANDED COPPER UNLESS OTHERWISE NOTED OR REQUIRED BY EQUIPMENT MANUFACTURER.

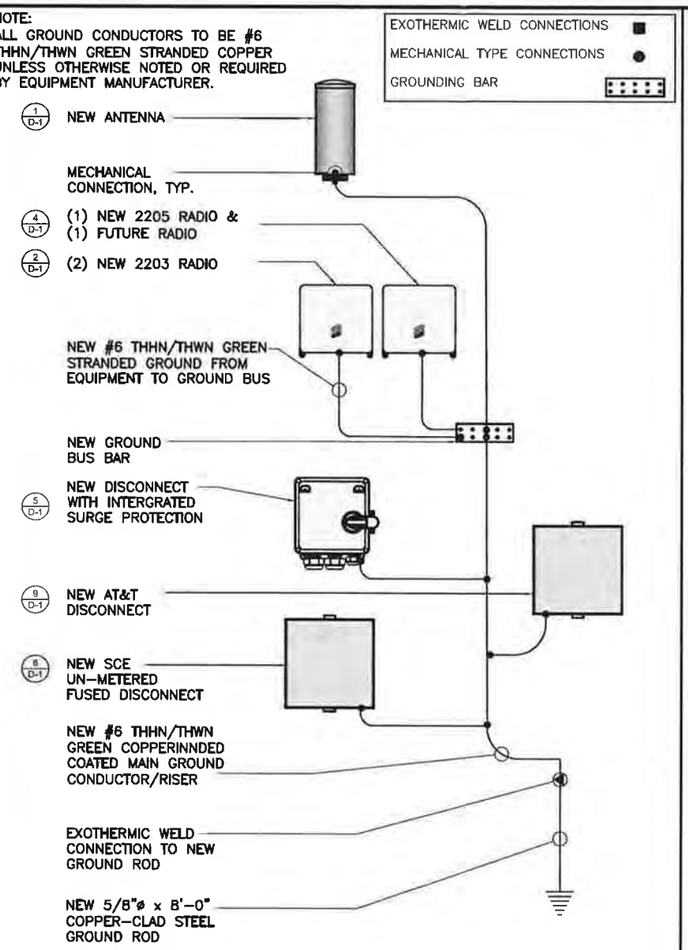

GROUNDING SCHEMATIC — 24"x36" SCALE: NTS / 11"x17" SCALE: NTS — 3

NOTE:
UTILITY DESIGN AND RUNS ARE PRELIMINARY. PENDING FINAL DESIGN FROM UTILITY PROVIDERS

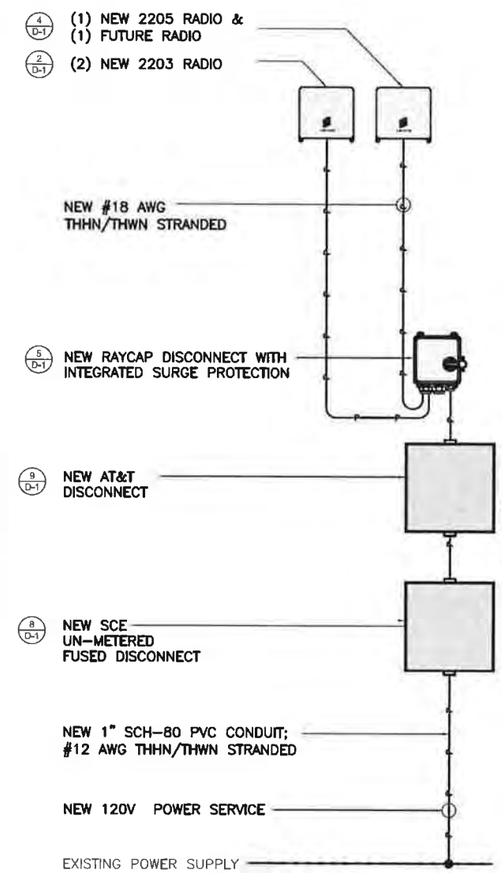

SINGLE LINE DIAGRAM — 24"x36" SCALE: NTS / 11"x17" SCALE: NTS — 1

NOT USED — 24"x36" SCALE: NTS / 11"x17" SCALE: NTS — 7

NOT USED — 24"x36" SCALE: NTS / 11"x17" SCALE: NTS — 4

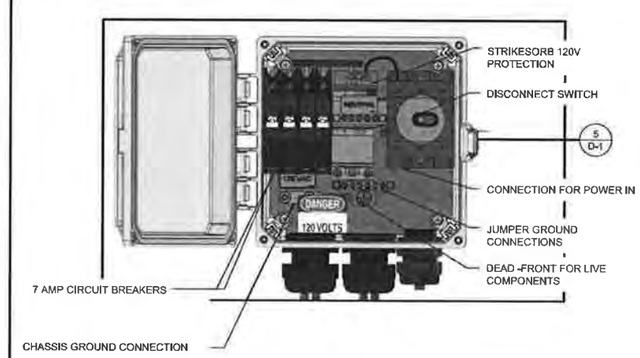

BREAKER SCHEDULE — 24"x36" SCALE: NTS / 11"x17" SCALE: NTS — 2

at&t

ERICSSON
330 COMMERCE, STE. 200
IRVINE, CA 92602

M SQUARED WIRELESS
1397 CALLE AVANZADO
SAN CLEMENTE CA 92673 (949) 291-6234

DRAWN BY:	AS
CHECKED BY:	MM

REV	DATE	DESCRIPTION
C	07/17/2018	REVISION
B	03/14/2018	100% CONSTRUCTION
A	12/26/2017	90% CONSTRUCTION

REGISTERED PROFESSIONAL ENGINEER
LOYALL A. WHARTON
C50547
CIVIL
STATE OF CALIFORNIA

IT IS A VIOLATION OF LAW FOR ANY PERSON, UNLESS THEY ARE ACTING UNDER THE DIRECTION OF A LICENSED PROFESSIONAL ENGINEER, TO ALTER THIS DOCUMENT.

SITE ID: HBNPB 26C
1087 BAKER ST.
COSTA MESA, CA, 92626

SHEET TITLE
ELECTRICAL DETAILS

SHEET NUMBER
E-1

AT&T Mobility
Small Cell Project
Site Name: CRAN_RLOS_HBNPB_022

Background

AT&T Mobility (AT&T) mission is to connect people with their world everywhere they live, work and play. AT&T delivers advance mobile services, high speed internet and smart solutions for people and business. AT&T is the global leader in Technology, Media and Telecommunications industry and is committed to the development, growth and improvement of communications in the United States. AT&T is a nationwide wireless service provider located throughout the United States and in U.S. territories. Millions of wireless connections take advantage of the company's mobile products and services. AT&T is committed to improve the customer experience of their hand-held devices, portable computing, and connected automobiles. The company's commitment is to have a robust network of cell sites that could bring faster data speeds and voice connectivity.

AT&T Mobility is a Telephone Corporation registered with the California Public Utilities Commission. The CPUC registration number is U 3060 C. As a Telephone Corporation, AT&T has a legal right to access public right of way under Section 7901 of the California Public Utilities Code.

Mobile Wireless Services

Traditional macro sites are the fundamental building blocks needed for the provision of wireless voice services and high-speed mobile internet. AT&T uses high-band and low-band spectrum to provide wireless service. Each spectrum band has different propagation characteristics, which may experience varied noise or signal interference at a given location. To increase the service quality and reduce noise and interference to the customer, AT&T uses multiple layers of its licensed spectrum to bring its facilities closer to the end user. Signal interference created by environmental clutter or noise from surrounding sources, degrades the signal quality in a manner that affects data rates, service quality, and ultimately coverage. Placing facilities closer to the end user creates smaller coverage cells that produce faster data rates and produces a more efficient use of the limited spectrum.

Adding macro sites has been the typical design solution to increase coverage, capacity and to off-load existing cell sites in the network. This design alternative consists of multiple antennas mounted to a large support structure and a base station of several radio cabinets. The topography of a given area, dense concentration of buildings, the lack of available real estate, the high construction costs and other environmental factors has made it more difficult to bring wireless services closer to the end user in order to reduce weak signals and noise interference, and to increase the data rates which support existing and future demands for optimal user experience of mobile devices.

AT&T solution to increase the densification of wireless signals and coverage capacity of its network in any given geographical area is the implementation of small cells within the public rights-of-way. Small cells are lightweight and low power antenna solutions designed to cover a radius of up to 1,500 feet. The typical configuration is a single omni directional antenna or a set of small antennas mounted to existing right-of-way infrastructure, including utility poles, replacement streetlights or other infrastructure. Remote radios are also used with the omni-directional antenna to connect the small cell to nearby macro locations or head-end stations via fiber connections. Small cell installations are non-intrusive to the local community and can easily blend-in with the natural urban or suburban landscape.

Project Description

AT&T engineers have identified several locations in Costa Mesa that require stronger signal densification in order to increase throughput rates and to meet the existing and future demands. These locations are shown on the enclosed Small Cell Network map, The map includes approximate coverage for each location shown in red circles and the special relationship from each other. Additional areas may be identified in the future as the engineers continue to monitor the network service quality and capacity.

The subject project is located at the intersection of Susan Street and Via Luca. AT&T proposes to install a 10-inch diameter omni-directional antenna and a 12-inch diameter shroud for the radios to be installed on a replaced SCE streetlight. The design is a complete antenna and radio concealment that will be compatible with the overall diameter of the replaced streetlight. The new installation will be painted gray to match the final aggregate light pole. The proposed installation is small in scale and will blend with the existing street landscape.

The project scope will consist of the following:

- Removal and replacement of a streetlight by SCE.
- Installation of a single omni-directional antenna.
- Installation of four remote radio units and raycap disconnect switch within a shroud.
- Installation of power and fiber handholds.

Plans depicting the project location, design, height and style with the new wireless antenna installation are enclosed. Photographic simulations showing the final antenna installation are also enclosed.

Construction and Maintenance

Construction of the proposed project will take approximately 30-days. All construction will be done in a manner that minimizes impact to residents and business in the area. Existing underground or overhead power and fiber connections will be used with minimal trenching. Directional boring will be used when deemed appropriate for each specific location.

Maintenance of the subject facility is minimal. The majority of the monitoring is done from AT&T's switching offices. If needed, a site visit to change any radio equipment will be coordinated with the existing utility providers and city.

Project Code Compliance

The subject project complies with the City of Costa Mesa Telecommunication Regulatory Ordinance in the Public Right-of-Way, Section 19-15 in the following ways:

1. The proposed wireless facility is a small cell installation to be placed on a replaced SCE streetlight in the public right-of-way.
2. The proposed facility is small in scale and is visually compatible with the surrounding development.
3. The project is allowed subject to the city's approval of a Minor Conditional Use Permit.
4. The proposed installation will not interfere with the use of the existing right-of-way. No ground mounted equipment is being proposed.
5. The proposed facility is a low powered antenna designed to work in conjunction with other small cell sites in the area and to off-load capacity from an existing macro facility. The installation will comply with applicable regulations of the Federal Communications Commission as demonstrated on the enclosed FCC Local Official Guide to RF – Appendix A.
6. As stated in the project description, the purpose for the deployment of small cells is to increase the signal quality and capacity to the identified area near the site. As such, implementation of the small cell project will reduce a data signal gap that currently existing at this location.
7. The applicant will conform to all City of Costa Mesa requirements.

EDISON
CARRIER SOLUTIONS℠
A Division of SOUTHERN CALIFORNIA EDISON℠

Brian P. Ryan
Principle Manager
Telephone: 909-274-1949
Brian.Ryan@sce.com

March 1, 2018

To Whom It May Concern:

Since 1994, Southern California Edison (SCE) has assisted wireless service providers in expanding their networks to meet customers' needs for telecommunications service. SCE makes available existing structures that can be used to co-locate the wireless service providers' equipment, while lessening the visual impacts on the community and constituency that is served. This letter requests that you help us in this endeavor.

In an effort to minimize the potential clutter that new vertical structures would produce, many California jurisdictions have adopted ordinances and policies encouraging wireless facilities to be mounted on street light poles within the public rights of way.

As you are aware, SCE owns and maintains street light poles in your jurisdiction pursuant to our LS-1 tariff. In order to accommodate the increasing demand for micro-cell site locations, SCE has agreed to allow wireless service providers to attach their antennas to some of these streetlight poles, and contractually requires the wireless service provider to comply with certain requirements, including a requirement that the facility will not impact SCE's ability to provide street lighting service.

Costa Mesa has and retains full control over the entitlement and permitting process for these and future sites. The wireless service providers also pay for electrical usage resulting from their sites. This electrical service is metered and billed separately, and the Jurisdiction is not impacted.

While SCE believes this approach benefits local governments as well as their constituency, we would not engage in this solution if doing so resulted in extra costs to SCE or Costa Mesa. We would therefore appreciate confirmation that Costa Mesa consents to use of its public rights of way for the purpose of licensing space on an SCE Streetlight Pole **# 4307109E** located at: **3333 Susan Street**. **AT&T** Site number:
SCL HBNPB 022
PTN# 3551A0DQGF
FA# 14345606.

Please sign this letter to indicate your consent and return it to me at the below address. If you have any questions, please feel free to call Alexandra Martin (714) 323-5951.

Regards,

Brian P. Ryan

Signature _____

Name _____

Title _____

Date: _____

SCE Edison Carrier Solutions
2 Innovation Way 1st Floor
Pomona, CA 91768

EDISON
CARRIER SOLUTIONS℠
A Division of SOUTHERN CALIFORNIA EDISON℠

Brian Ryan
Principal Manager Telecom Sales
Edison Carrier Solutions
e-mail: Brian.Ryan@sce.com

March 1, 2018

Costa Mesa Planning / Permitting Department

To Whom It May Concern:

Re: Letter of Authorization

SCE streetlight identified as – SCE Streetlight Pole # **4307109E** located adjacent: **3333 Susan Street**. **AT&T** Site Name: **SCL HBNPB 022**
PTN# 3551A0DQGF
FA# 14345606.

Southern California Edison Company (SCE) is the owner of the Light Pole, located in Costa Mesa, CA. AT&T "Carrier" has requested that SCE replace the existing Light Pole so that it can be used for operating a wireless communications facility, ("Site").

SCE has reviewed Carrier's preliminary plans for this Site and believe these plans are compatible with SCE's use of this Light Pole. Thus, as a representative of SCE, I hereby authorize Carrier, and its representatives, to seek and secure all right(s), including any environmental review associated with granting such rights, that are needed from the Jurisdiction to use the Light Pole and other property for this purpose as long as there are no costs to SCE.

Notwithstanding this authorization, SCE reserves the right to reject Carrier's request for use of its Light Pole for any reason, including imposed conditions or required changes to the light pole by the Jurisdiction, are unacceptable to SCE.

All correspondence and/or notices regarding use of SCE's Light Pole by Carrier, or any later requests by the Carrier for authorizations or approvals needed for construction, operation or maintenance of an approved Site, should include a copy to SCE.

If you have any questions concerning this project, please contact Alexandra Martin 714-323-5951.

Sincerely,

Brian P. Ryan

2 Innovation Way, 1st Floor
Pomona, CA 91768

PLEASE TRANSFER LETTER TO CITY LETTERHEAD

Date

Brian Ryan
Southern California Edison
Carrier Solutions Division
2 Innovation Way 1st Floor
Pomona, Ca 91768

Dear Mr. Ryan:

This letter authorizes Southern California Edison (SCE) to disconnect the SCE streetlight identified as – SCE Streetlight Pole **#4307109E** located adjacent: **3333 Susan Street**. **AT&T** Site number: **SCL HBNPB 022**
PTN# 3551A0DQGF
FA# 14345606 so that work can be performed to replace the existing Streetlight.

AT&T (Wireless Carrier) has requested that SCE replace the Southern California Edison streetlight with a new streetlight that will be used for operating the wireless communications facility identified as SCE Light Pole **#4307109E** located adjacent: 3333 Susan Street. **AT&T** Site number: **SCL HBNPB 022**
PTN# 3551A0DQGF
FA# 14345606.

Please coordinate the disconnecting of the streetlight directly with Costa Mesa, (please provide County Contact Name, Phone) so that the light will be out only for the above referenced work to be completed.

If you have any questions, please do not hesitate to call me.

Sincerely,

Name
Public Agency

SOUTHERN CALIFORNIA EDISON STREETLIGHT AUTHORIZATION

DEVELOPER/APPLICANT MUST PROVIDE THIS FORM
COMPLETED BY THE PUBLIC AUTHORITY
FOR ANY SCE-OWNED STREETLIGHT INSTALLATION, REMOVAL OR CHANGE REQUESTS
Incomplete forms will be returned and not processed

PUBLIC AUTHORITY NAME: City of Costa Mesa

Builder/Developer Name: AT&T / Ericsson **Phone #:** (281) 995-3829

Tract/Ref # leave blank **Streetlight Location** Pole #4307109E, 3333 Susan Street, HBNPB_22A

Please Check one: ☐ **Installation** ☐ **Removal** ☑ **Change**

Number of Lamp(s)	Lamp Size	Lamp Type
1	150 Watts	Sodium Vapor

New Installations
Public Authority Responsibility for Streetlight Monthly Billing
Please Check one and fill out applicable dates:

____**Upon Energizing**
☐ **If Public Authority is collecting Builder/Developer Advanced Energy Payment, indicate date collected. (_____)**

Monthly Billing: ____Establish new Service Account (SA) Use existing SA #_____

____ **Commitment Date-**
Date Agreed upon by SCE and Public Authority (_____) or no later than 36 months from first streetlight energized whichever is earlier.

Monthly Billing: ____Establish new Service Account (SA) Use existing SA #_____

x **Public Authority is not responsible**
____**HOA Area Name_____ Other Entity (please define)** AT&T

Public Authority Notes:
Please notify Mohcine Chirar at (714) 754-5140 when scheduling disconnect of existing streetlight.

0 day outage requested; City of Costa Mesa retains responsibility for LS-1 lighting electrical payment; AT&Tcovers costs of pole replacement

Authorized Public Authority Agent

_____ _____ _____
Print name **Date** **Signature**

Phone #_____ _____
Title

TO BE COMPLETED BY SCE
ACTION: ENTER TRACT/REF# ON DM PROGRAM NAME FIELD.

District _____ **Planning AOR**_____ **PLANNER NAME (PRINT)**

DM SR # _____ **Product #**_____ **(one per SLA)**

FORWARD COMPLETED COPIES OF THE SLA FORM, MAP AND CSD272 CONTRACT, IF APPLICABLE TO:
"Street & Outdoor Lighting Organization" Santa Ana Bldg. D

Radio Frequency – Electromagnetic Energy (RF-EME) Compliance Report

Analysis Completed For:
Site No. CRAN_RLOS_HBNPB_020
MRLOS045170
HBNPB 20B
3590 Harbor Gateway North
Costa Mesa, California 92626
Orange County
33.701857; -117.923339 NAD83
Utility Pole

Note that these results can also be applied to other Costa Mesa locations using the same antenna and power configurations with a greater than or equal to antenna radiation center.

The proposed AT&T installation will be in compliance with FCC regulations upon proper installation of recommended signage.

EBI Project No. 6218004289
June 19, 2018

Prepared for:

AT&T Mobility, LLC
100 West Alondra Boulevard
Gardena, California 90248

Prepared by:

EBI Consulting
environmental | engineering | due diligence

TABLE OF CONTENTS

EXECUTIVE SUMMARY 1
1.0 FEDERAL COMMUNICATIONS COMMISSION (FCC) REQUIREMENTS 3
2.0 AT&T RF EXPOSURE POLICY REQUIREMENTS 5
3.0 WORST-CASE PREDICTIVE MODELING 6
4.0 RECOMMENDED SIGNAGE/COMPLIANCE PLAN 7
5.0 SUMMARY AND CONCLUSIONS 8
6.0 LIMITATIONS 8

APPENDICES

Appendix A Personnel Certifications
Appendix B Compliance/Signage Plan

EXECUTIVE SUMMARY

Purpose of Report

EnviroBusiness Inc. (dba EBI Consulting) has been contracted by AT&T Mobility, LLC to conduct radio frequency electromagnetic (RF-EME) modeling for AT&T Site CRAN_RLOS_HBNPB_020 located at 3590 Harbor Gateway North in Costa Mesa, California to determine RF-EME exposure levels from proposed AT&T wireless communications equipment at this site. As described in greater detail in Section 1.0 of this report, the Federal Communications Commission (FCC) has developed Maximum Permissible Exposure (MPE) Limits for general public exposures and occupational exposures. This report summarizes the results of RF-EME modeling in relation to relevant FCC RF-EME compliance standards for limiting human exposure to RF-EME fields.

This report contains a detailed summary of the RF EME analysis for the site, including the following:

- Site Plan with antenna locations
- Graphical representation of theoretical MPE fields based on modeling
- Graphical representation of recommended signage and/or barriers

This document addresses the compliance of AT&T's transmitting facilities independently and in relation to all collocated facilities at the site.

Statement of Compliance

A site is considered out of compliance with FCC regulations if there are areas that exceed the FCC exposure limits <u>and</u> there are no RF hazard mitigation measures in place. Any carrier which has an installation that contributes more than 5% of the applicable MPE must participate in mitigating these RF hazards.

As presented in the sections below, based on worst-case predictive modeling, there are no modeled exposures on any accessible utility line level and ground walking/working surface related to ATT's proposed antennas that exceed the FCC's occupational and/or general public exposure limits at this site.

As such, the proposed AT&T installation is in compliance with FCC regulations upon proper installation of recommended signage and/or barriers.

AT&T Recommended Signage/Compliance Plan

AT&T's RF Exposure: Responsibilities, Procedures & Guidelines document, dated October 28, 2014, requires that:

1. All sites must be analyzed for RF exposure compliance;
2. All sites must have that analysis documented; and
3. All sites must have any necessary signage and barriers installed.

Site compliance recommendations have been developed based upon protocols presented in AT&T's RF Exposure: Responsibilities, Procedures & Guidelines document, dated October 28, 2014, additional guidance provided by AT&T, EBI's understanding of FCC and OSHA requirements, and common industry practice. Barrier locations have been identified (when required) based on guidance presented in AT&T's RF Exposure: Responsibilities, Procedures & Guidelines document, dated October 28, 2014.

The following signage is recommended at this site:

- Blue NOTICE decals posted around the bottom of the radome of the antenna.

The signage proposed for installation at this site complies with AT&T's RF Exposure: Responsibilities, Procedures & Guidelines document and therefore complies with FCC and OSHA requirements. Barriers are not recommended on this site. More detailed information concerning site compliance recommendations is presented in Section 4.0 and Appendix B of this report.

1.0 FEDERAL COMMUNICATIONS COMMISSION (FCC) REQUIREMENTS

The FCC has established Maximum Permissible Exposure (MPE) limits for human exposure to Radiofrequency Electromagnetic (RF-EME) energy fields, based on exposure limits recommended by the National Council on Radiation Protection and Measurements (NCRP) and, over a wide range of frequencies, the exposure limits developed by the Institute of Electrical and Electronics Engineers, Inc. (IEEE) and adopted by the American National Standards Institute (ANSI) to replace the 1982 ANSI guidelines. Limits for localized absorption are based on recommendations of both ANSI/IEEE and NCRP.

The FCC guidelines incorporate two separate tiers of exposure limits that are based upon occupational/controlled exposure limits (for workers) and general public/uncontrolled exposure limits for members of the general public.

Occupational/controlled exposure limits apply to situations in which persons are exposed as a consequence of their employment and in which those persons who are exposed have been made fully aware of the potential for exposure and can exercise control over their exposure. Occupational/ controlled exposure limits also apply where exposure is of a transient nature as a result of incidental passage through a location where exposure levels may be above general public/uncontrolled limits (see below), as long as the exposed person has been made fully aware of the potential for exposure and can exercise control over his or her exposure by leaving the area or by some other appropriate means.

General public/uncontrolled exposure limits apply to situations in which the general public may be exposed or in which persons who are exposed as a consequence of their employment may not be made fully aware of the potential for exposure or cannot exercise control over their exposure. Therefore, members of the general public would always be considered under this category when exposure is not employment-related, for example, in the case of a telecommunications tower that exposes persons in a nearby residential area.

Table 1 and Figure 1 (below), which are included within the FCC's OET Bulletin 65, summarize the MPE limits for RF emissions. These limits are designed to provide a substantial margin of safety. They vary by frequency to take into account the different types of equipment that may be in operation at a particular facility and are "time-averaged" limits to reflect different durations resulting from controlled and uncontrolled exposures.

The FCC's MPEs are measured in terms of power (mW) over a unit surface area (cm^2). Known as the power density, the FCC has established an occupational MPE of 5 milliwatts per square centimeter (mW/cm^2) and an uncontrolled MPE of 1 mW/cm2 for equipment operating in the 1900 MHz frequency range. For the AT&T equipment operating at 850 MHz, the FCC's occupational MPE is 2.83 mW/cm^2 and an uncontrolled MPE of 0.57 mW/cm^2. For the AT&T equipment operating at 700 MHz, the FCC's occupational MPE is 2.33 mW/cm^2 and an uncontrolled MPE of 0.47 mW/cm^2. These limits are considered protective of these populations.

Table 1: Limits for Maximum Permissible Exposure (MPE)

(A) Limits for Occupational/Controlled Exposure

Frequency Range (MHz)	Electric Field Strength (E) (V/m)	Magnetic Field Strength (H) (A/m)	Power Density (S) (mW/cm^2)	Averaging Time $[E]^2$, $[H]^2$, or S (minutes)
0.3-3.0	614	1.63	(100)*	6
3.0-30	1842/f	4.89/f	($900/f^2$)*	6
30-300	61.4	0.163	1.0	6
300-1,500	--	--	f/300	6

Table 1: Limits for Maximum Permissible Exposure (MPE)				
(A) Limits for Occupational/Controlled Exposure				
Frequency Range (MHz)	**Electric Field Strength (E) (V/m)**	**Magnetic Field Strength (H) (A/m)**	**Power Density (S) (mW/cm²)**	**Averaging Time [E]², [H]², or S (minutes)**
1,500-100,000	--	--	5	6
(B) Limits for General Public/Uncontrolled Exposure				
Frequency Range (MHz)	**Electric Field Strength (E) (V/m)**	**Magnetic Field Strength (H) (A/m)**	**Power Density (S) (mW/cm²)**	**Averaging Time [E]², [H]², or S (minutes)**
0.3-1.34	614	1.63	(100)*	30
1.34-30	824/f	2.19/f	$(180/f^2)$*	30
30-300	27.5	0.073	0.2	30
300-1,500	--	--	f/1,500	30
1,500-100,000	--	--	1.0	30

f = Frequency in (MHz)
* Plane-wave equivalent power density

Figure 1. FCC Limits for Maximum Permissible Exposure (MPE)
Plane-wave Equivalent Power Density

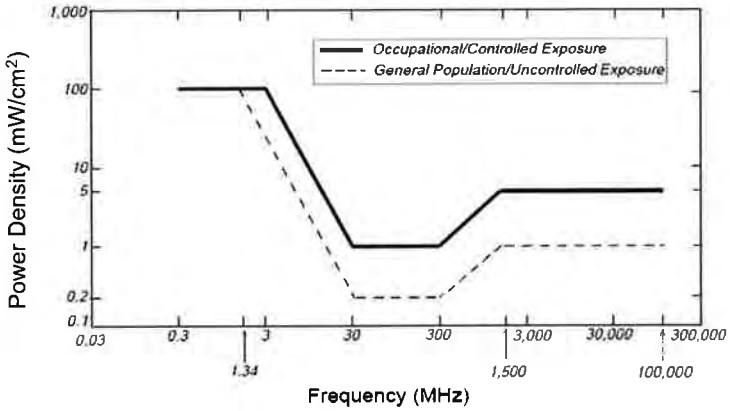

Based on the above, the most restrictive thresholds for exposures of unlimited duration to RF energy for several personal wireless services are summarized below:

Personal Wireless Service	Approximate Frequency	Occupational MPE	Public MPE
Personal Communication (PCS)	1,950 MHz	5.00 mW/cm²	1.00 mW/cm²
Cellular Telephone	870 MHz	2.90 mW/cm²	0.58 mW/cm²
Specialized Mobile Radio	855 MHz	2.85 mW/cm²	0.57 mW/cm²
Long Term Evolution (LTE)	700 MHz	2.33 mW/cm²	0.47 mW/cm²
Most Restrictive Freq, Range	30-300 MHz	1.00 mW/cm²	0.20 mW/cm²

MPE limits are designed to provide a substantial margin of safety. These limits apply for continuous exposures and are intended to provide a prudent margin of safety for all persons, regardless of age, gender, size, or health.

Personal Communication (PCS) facilities used by AT&T in this area operate within a frequency range of 700-1900 MHz. Facilities typically consist of: 1) electronic transceivers (the radios or cabinets) connected to wired telephone lines; and 2) antennas that send the wireless signals created by the transceivers to be received by individual subscriber units (PCS telephones). Transceivers are typically connected to antennas by coaxial cables.

Because of the short wavelength of PCS services, the antennas require line-of-site paths for good propagation, and are typically installed above ground level. Antennas are constructed to concentrate energy towards the horizon, with as little energy as possible scattered towards the ground or the sky. This design, combined with the low power of PCS facilities, generally results in no possibility for exposure to approach Maximum Permissible Exposure (MPE) levels, with the exception of areas directly in front of the antennas.

2.0 AT&T RF EXPOSURE POLICY REQUIREMENTS

AT&T's RF Exposure: Responsibilities, Procedures & Guidelines document, dated October 28, 2014, requires that:

1. All sites must be analyzed for RF exposure compliance;
2. All sites must have that analysis documented; and
3. All sites must have any necessary signage and barriers installed.

Pursuant to this guidance, worst-case predictive modeling was performed for the site. This modeling is described below in Section 3.0. Lastly, based on the modeling and survey data, EBI has produced a Compliance Plan for this site that outlines the recommended signage and barriers. The recommended Compliance Plan for this site is described in Section 4.0.

3.0 WORST-CASE PREDICTIVE MODELING

In accordance with AT&T's RF Exposure policy, EBI performed theoretical modeling using RoofView® software to estimate the worst-case power density at the site utility line level and ground-level resulting from operation of the antennas. RoofView® is a widely-used predictive modeling program that has been developed by Richard Tell Associates to predict both near field and far field RF power density values for roof-top and tower telecommunications sites produced by vertical collinear antennas that are typically used in the cellular, PCS, paging and other communications services. The models utilize several operational specifications for different types of antennas to produce a plot of spatially-averaged power densities that can be expressed as a percentage of the applicable exposure limit.

For this report, EBI utilized antenna and power data provided by AT&T, and compared the resultant worst-case MPE levels to the FCC's occupational/controlled exposure limits outlined in OET Bulletin 65. For this report, EBI utilized antenna and power data provided by AT&T and compared the resultant worst-case MPE levels to the FCC's occupational/controlled exposure limits outlined in OET Bulletin 65. The assumptions used in the modeling are based upon information provided by AT&T and information gathered from other sources. There are no other wireless carriers with equipment installed at this site.

Based on worst-case predictive modeling, there are no modeled exposures on any accessible utility line level and ground walking/working surface related to ATT's proposed antennas that exceed the FCC's occupational and/or general public exposure limits at this site.

At the nearest walking/working surfaces to the AT&T antenna, the maximum power density generated by the AT&T antenna is approximately 57.10 percent of the FCC's general public limit (11.42 percent of the FCC's occupational limit). The composite exposure level from all carriers on this site is approximately 57.10 percent of the FCC's general public limit (11.42 percent of the FCC's occupational limit) at the nearest walking/working surface to each antenna. Based on worst-case predictive modeling, there are no areas at ground level related to the proposed AT&T antenna that exceed the FCC's occupational or general public exposure limits at this site. At ground level, the maximum power density generated by the antenna is approximately 1.00 percent of the FCC's general public limit (0.20 percent of the FCC's occupational limit).

A graphical representation of the RoofView® modeling results is presented in Appendix B. It should be noted that RoofView® is not suitable for modeling microwave dish antennas; however, these units are designed for point-to-point operations at the elevations of the installed equipment rather than ground-level coverage. Based on AT&T's RF Exposure: Responsibilities, Procedures & Guidelines document, dated October 28, 2014, microwave antennas are considered compliant if they are higher than 20 feet above any accessible walking/working surface. There are no microwaves installed at this site.

4.0 RECOMMENDED SIGNAGE/COMPLIANCE PLAN

Signs are the primary means for control of access to areas where RF exposure levels may potentially exceed the MPE. As presented in the AT&T guidance document, the signs must:

- Be posted at a conspicuous point;
- Be posted at the appropriate locations;
- Be readily visible; and
- Make the reader aware of the potential risks prior to entering the affected area.

The table below presents the signs that may be used for AT&T installations.

Informational Signs		Alerting Signs	
	INFO 1	NOTICE 1	NOTICE 2
	INFO 2	NOTICE DECAL	
	INFO 3	CAUTION 1 – ROOFTOP	CAUTION 2 - ROOFTOP
	INFO 4	CAUTION - TOWER	WARNING

Based upon protocols presented in AT&T's RF Exposure: Responsibilities, Procedures & Guidelines document, dated October 28, 2014, and additional guidance provided by AT&T, the following signage is recommended on the site:

- Blue NOTICE decals posted around the bottom of the radome of the antenna.

No barriers are required for this site. The signage is graphically represented in the Signage Plan presented in Appendix B.

5.0 SUMMARY AND CONCLUSIONS

EBI has prepared this Radiofrequency Emissions Compliance Report for the proposed AT&T telecommunications equipment at the site located at 3590 Harbor Gateway North in Costa Mesa, California.

EBI has conducted theoretical modeling to estimate the worst-case power density from AT&T antennas to document potential MPE levels at this location and ensure that site control measures are adequate to meet FCC and OSHA requirements, as well as AT&T's corporate RF safety policies. As presented in the preceding sections, based on worst-case predictive modeling, there are no modeled exposures on any accessible utility line level and ground walking/working surface related to ATT's proposed antennas that exceed the FCC's occupational and/or general public exposure limits at this site.

Signage is recommended at the site as presented in Section 4.0 and Appendix B. Posting of the signage brings the site into compliance with FCC rules and regulations and AT&T's corporate RF safety policies.

6.0 LIMITATIONS

This report was prepared for the use of AT&T Mobility, LLC to meet requirements outlined in AT&T's corporate RF safety guidelines. It was performed in accordance with generally accepted practices of other consultants undertaking similar studies at the same time and in the same locale under like circumstances. The conclusions provided by EBI are based solely on the information provided by the client. The observations in this report are valid on the date of the investigation. Any additional information that becomes available concerning the site should be provided to EBI so that our conclusions may be revised and modified, if necessary. This report has been prepared in accordance with Standard Conditions for Engagement and authorized proposal, both of which are integral parts of this report. No other warranty, expressed or implied, is made.

Appendix A

Personnel Certifications

Reviewed and Approved by:

REGISTERED PROFESSIONAL ENGINEER
MICHAEL A. McGUIRE
E18898
EXP. 30 SEP 19
ELECTRICAL
STATE OF CALIFORNIA

sealed 6jun2018

Michael McGuire
Electrical Engineer

Note that EBI's scope of work is limited to an evaluation of the Radio Frequency – Electromagnetic Energy (RF-EME) field generated by the antennas and broadcast equipment noted in this report. The engineering and design of the structure, as well as the impact of the antennas and broadcast equipment on the structural integrity of the structure, are specifically excluded from EBI's scope of work.

Preparer Certification

I, Ryan Eaton, state that:

- I am an employee of EnviroBusiness Inc. (d/b/a EBI Consulting), which provides RF-EME safety and compliance services to the wireless communications industry.
- I have successfully completed RF-EME safety training, and I am aware of the potential hazards from RF-EME and would be classified "occupational" under the FCC regulations.
- I am familiar with the FCC rules and regulations as well as OSHA regulations both in general and as they apply to RF-EME exposure.
- I have been trained in on the procedures outlined in AT&T's RF Exposure: Responsibilities, Procedures & Guidelines document (dated October 28, 2014) and on RF-EME modeling using RoofView® modeling software.
- I have reviewed the data provided by the client and incorporated it into this Site Compliance Report such that the information contained in this report is true and accurate to the best of my knowledge.

Appendix B

Compliance/Signage Plan

At the nearest walking/working surfaces to the AT&T antenna, the maximum power density generated by the AT&T antenna is approximately 57.10 percent of the FCC's general public limit (11.42 percent of the FCC's occupational limit). The composite exposure level from all carriers on this site is approximately 57.10 percent of the FCC's general public limit (11.42 percent of the FCC's occupational limit) at the nearest walking/working surface to each antenna. Based on worst-case predictive modeling, there are no areas at ground level related to the proposed AT&T antenna that exceed the FCC's occupational or general public exposure limits at this site. At ground level, the maximum power density generated by the AT&T antenna is approximately 1.00 percent of the FCC's general public limit (0.20 percent of the FCC's occupational limit).

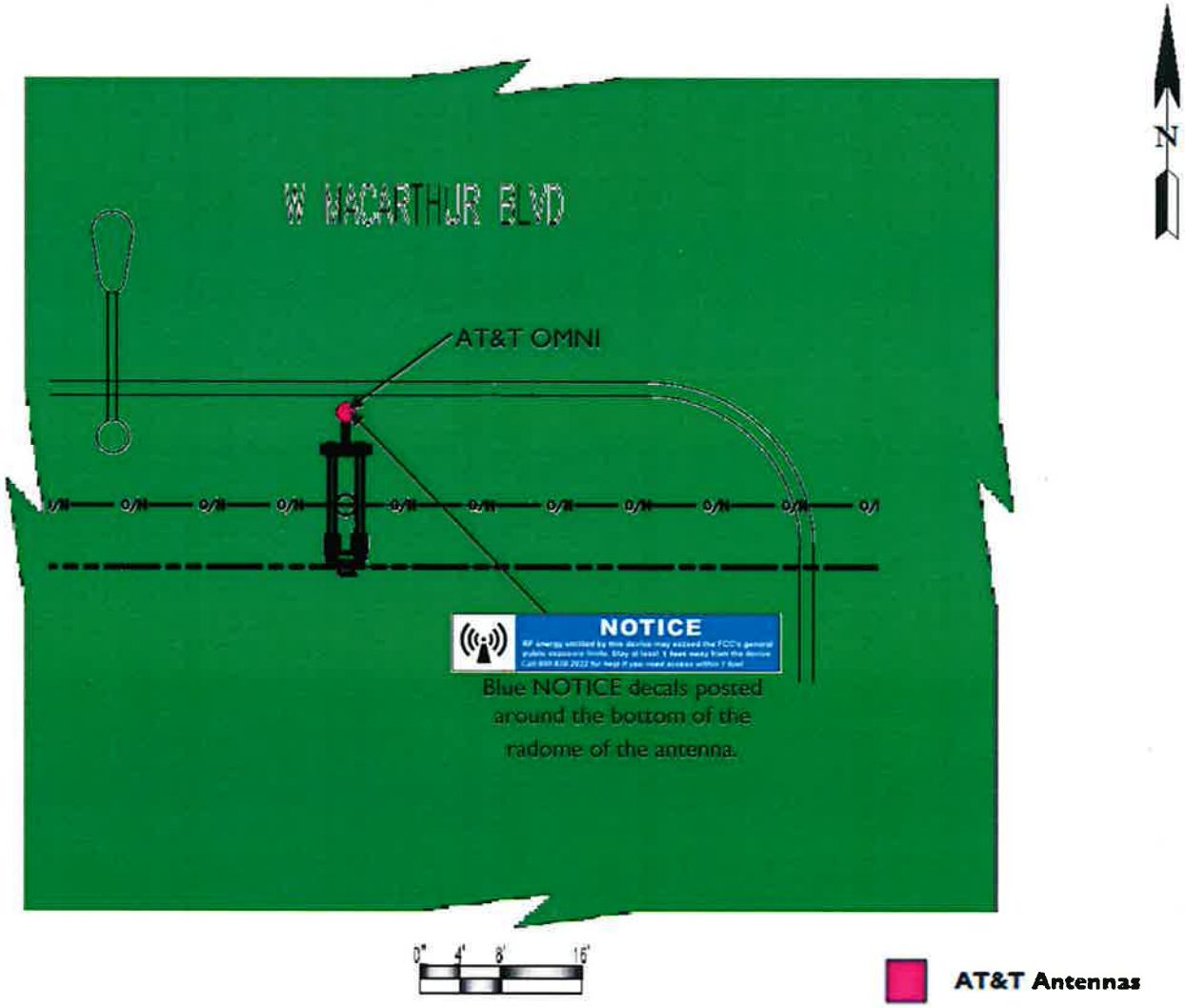

% FCC Public Exposure Limit	
	Exposure Level ≥ 5,000
	500 < Exposure Level ≤ 5,000
	100 < Exposure Level ≤ 500
	Exposure Level ≤ 100

Sign Identification Legend			
	Denotes AT&T Information Sign 1		Denotes AT&T NOTICE Sign
	Denotes AT&T Information Sign 2		Denotes AT&T CAUTION Sign
	Denotes AT&T Information Sign 3		Denotes AT&T CAUTION Tower Sign
	Denotes AT&T Information Sign 4		Denotes AT&T WARNING Sign

Compliance/Signage Plan

Facility Operator: AT&T Mobility
Site Name: HBNPB 20B
AT&T Site Number: CRAN_RLOS_HBNPB_020
USID Number: 188431
Report Date: 06-19-18

EBI Consulting
environmental | engineering | due diligence

Statement of CLEC and CPUC Status

New Cingular Wireless PCS LLC ("NCW") dba AT&T Mobility is a telephone corporation that provides wireless service in the City of Costa Mesa pursuant to a Wireless Identification Registration Number, U 3060 C, issued by the California Public Utilities Commission. Section 7901 of the California Public Utilities Code authorizes telephone corporations to construct facilities in the public right of way. Thus, as a registered wireless carrier, NCW is allowed to construct facilities in the public right of way.

NCW does not have and is not required to have a Certificate of Public Convenience and Necessity (CPCN). The CPUC terminated the requirement for wireless carriers to have CPCNs in 1994 and replaced it with the registration process. Please see Section 1013 of the Cal. Pub. Util. Code and attached letter from CPUC.

Under Cal. Pub. Utils. Code §§ 7901 & 7901.1 (excerpted below), AT&T has an affirmative right to deploy its facilities in public right-of-way subject to the city's police power to control the location and manner of an installation. The city police power, however, is limited, and it must exercise this authority in a reasonable and nondiscriminatory manner. See 7901.1.

PUBLIC UTILITIES CODE SECTION 7901-7901.1

7901. Telegraph or telephone corporations may construct lines of telegraph or telephone lines along and upon any public road or highway, along or across any of the waters or lands within this State, and may erect poles, posts, piers, or abutments for supporting the insulators, wires, and other necessary fixtures of their lines, in such manner and at such points as not to incommode the public use of the road or highway or interrupt the navigation of the waters.

7901.1. (a) It is the intent of the Legislature, consistent with Section 7901, that municipalities shall have the right to exercise reasonable control as to the time, place, and manner in which roads, highways, and waterways are accessed.
(b) The control, to be reasonable, shall, at a minimum, be applied to all entities in an equivalent manner.
(c) Nothing in this section shall add to or subtract from any existing authority with respect to the imposition of fees by municipalities.

STATE OF CALIFORNIA

ARNOLD SCHWARZENEGGER, GOVERNOR

PUBLIC UTILITIES COMMISSION
505 VAN NESS AVENUE
SAN FRANCISCO, CA 94102-3298

To: CMSR Registration Applicant

Subject: Information Required to Obtain Wireless Identification Registration (WIR) Number (U Number).

Dear Applicant,

For your information, Commission Decision 94-10-031, (issued on October 12, 1994) established a wireless registration process for all Commercial Mobile Radiotelephone Services (CMRS) providers within California. The Commission has eliminated the Certificate of Public Necessity and Convenience (CPCN) for all CMRS providers. This policy change is a result of action by Congress in the Omnibus Budget Reconciliation Act of 1993, which removed states authority to regulate entry and rates of CMRS providers effective August 10, 1994.

In lieu of the CPCN, the Commission now requires CMRS providers who did not hold a CPCN prior to August 10, 1994, and who intend to offer intrastate wireless telecommunications services within California, to file a Wireless Identification Registration containing the following information concurrent with undertaking such service. This information must be on company letterhead, type of service to be offered, and signed by at least one officer of the company.

1. The legal name of the business offering such service.
2. Any fictitious or other names under which such service will be offered.
3. The local business address for the utility, if any.
4. The home office business address if different than the local business address.
5. The name and address of the designated agent for service of process.
6. Name, title, address, and telephone number of the person to be contacted regarding the reported information.
7. The identity of the directors and principal officers of the business.
8. Names of all affiliated companies and their relationship, indicating if the affiliate is a regulated public utility.
9. Telephone numbers to which service or other customer complaints should be directed.

The information should be filed with the Telecommunications Division. Service can be commenced upon receiving the WIN from the CPUC. You should receive a WIN within a few days after the Commission receives the registration information.

Within 30 days of a change in the status of any of the information items listed above, the carrier shall notify the Telecommunications Division of such change in writing.

If you have questions or need further clarification please call Rudy Sastra at (415) 703-2673.

Sincerely,

Jack Leutza, Director
Telecommunications Division

PLEASE SEND THIS INFORMATION TO:

Rudy Sastra
Carrier Branch
Telecommunications Division
California Public Utilities Commission
505 Van Ness Avenue
San Francisco, CA 94102
(415) 703-2673

CRAN_RLOS_HBNPB_022

3333 Susan Street
Costa Mesa, CA 92626

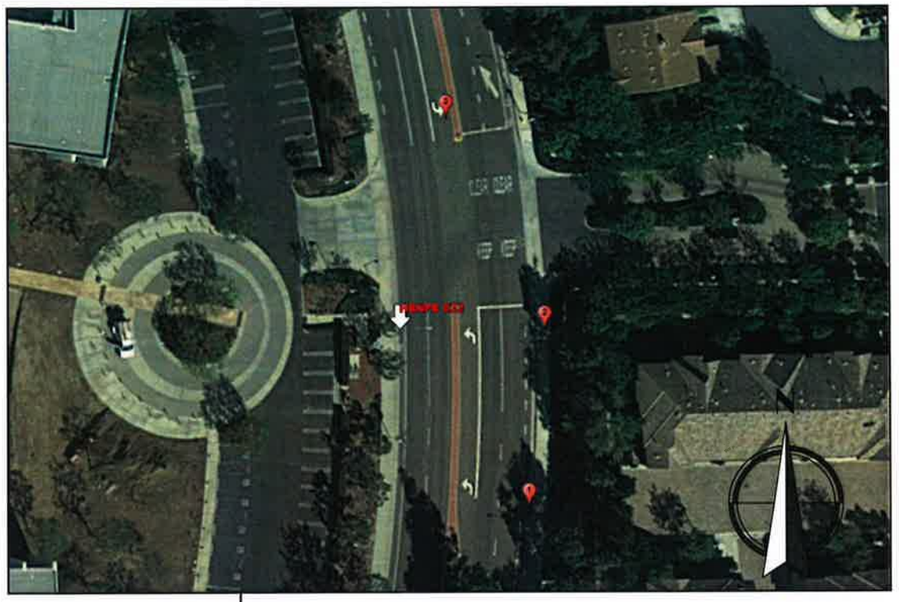

Location Map

Existing Site Conditions

Proposed Site Build

View 1

CRAN_RLOS_HBNPB_022

3333 Susan Street
Costa Mesa, CA 92626

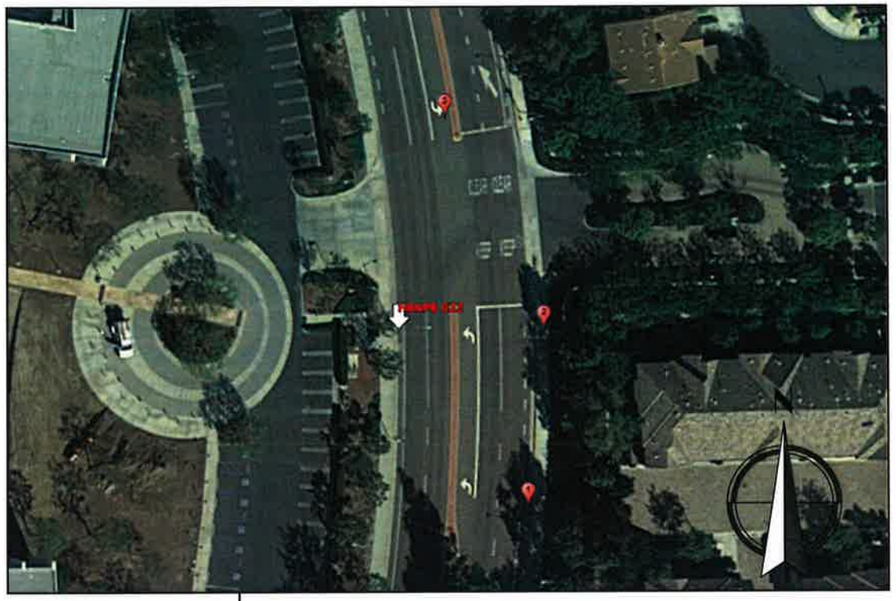

Location Map

Existing Site Conditions

Proposed Site Build

View 2

CRAN_RLOS_HBNPB_022

3333 Susan Street
Costa Mesa, CA 92626

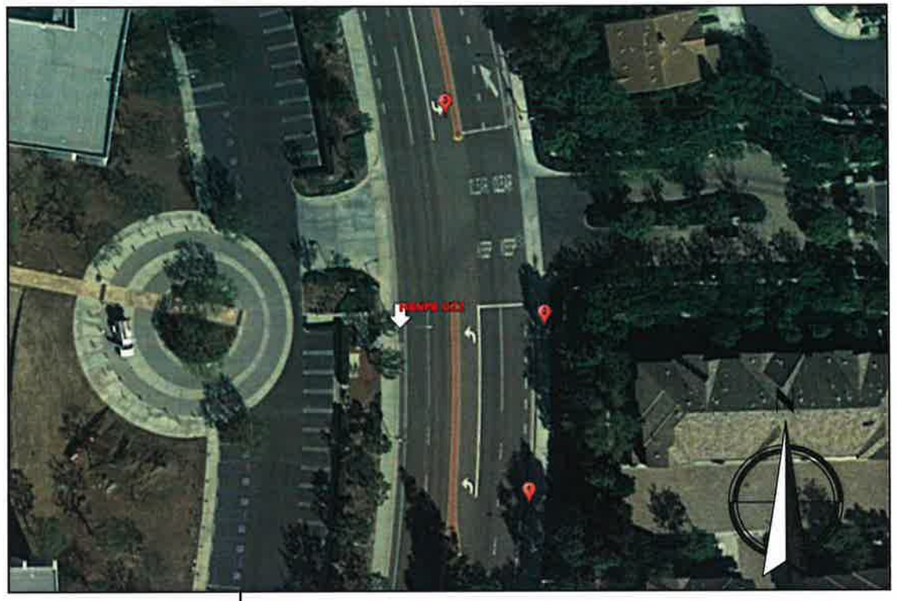

Location Map

Existing Site Conditions

Proposed Site Build

View 3

SITE NAME: HBNPB 22A
SITE NUMBER: CRAN_RLOS_HBNPB_022
PROJECT: CRAN/ SMALL CELL
USID: 188433
PACE: MRLOS045195

at&t

POLE TYPE: (N) CONCRETE LIGHT POLE
POLE ID #: 4307109E
SITE ADDRESS:3333 SUSAN ST, COSTA MESA, CA 92626

MINOR CONDITIONAL USE PERMIT/
ADMINISTRATIVE ADJUSTMENT NO. ZA-18-33
Approval in Concept
SUBJECT TO CONDITIONS
CITY OF COSTA MESA
PLANNING DEPT.
BY JWA DATE 12/05/18

APPROVALS

THE FOLLOWING PARTIES HEREBY APPROVE AND ACCEPT THESE DOCUMENTS & AUTHORIZE THE SUBCONTRACTOR TO PROCEED WITH THE CONSTRUCTION DESCRIBED HEREIN. ALL DOCUMENTS ARE SUBJECT TO REVIEW BY THE LOCAL BUILDING DEPARTMENT & MAY IMPOSE CHANGES OR MODIFICATIONS.

APPROVED BY:	INITIALS:	DATE:
AT&T RF ENGINEER:		
AT&T OPERATIONS:		
SITE ACQUISITION MANAGER:		
PROJECT MANAGER:		
ZONING VENDOR:		
LEASING VENDOR:		
CONSTRUCTION MANAGER:		
A/E MANAGER:		
PROPERTY OWNER:		
UTILITY MANAGER:		

PROJECT DESCRIPTION

AT&T PROPOSES TO INSTALL A NEW WIRELESS INSTALLATION LOCATED IN THE PUBLIC RIGHT OF WAY TO (N) CONCRETE LIGHT POLE.

THE SCOPE WILL CONSIST OF THE FOLLOWING:

* SCE TO REMOVE (1) EXISTING CONCRETE STREETLIGHT
* SCE TO INSTALL (1) 29'-3" CONCRETE STREETLIGHT
* AT&T TO INSTALL (4) NEW AT&T REMOTE RADIO UNITS
* AT&T TO INSTALL (1) NEW AT&T OMNI-DIRECTIONAL ANTENNA
* AT&T TO INSTALL (1) NEW AT&T 14" DIAMETER EQUIPMENT SHROUD
* AT&T TO INSTALL (1) NEW RAYCAP DISCONNECT
* AT&T TO INSTALL (1) NEW HANDHOLE

PROJECT SITE INFORMATION

PUBLIC/PRIVATE:	PUBLIC RIGHT-OF-WAY
ADDRESS:	3333 SUSAN ST, COSTA MESA, CA ,92626
APPLICANT:	AT&T
ADDRESS:	1452 EDINGER AVE TUSTIN, CA 92780
LATITUDE (NAD 83):	33.694314
LONGITUDE (NAD 83):	-117.913570
LAT/LONG TYPE:	NAD-83
GROUND ELEVATION (NAVD 88)	±32.24'
ADJACENT TO APN #:	140-041-81
JURISDICTION:	CITY OF COSTA MESA
CURRENT ZONING:	PUBLIC RIGHT OF WAY
PROPOSED USE:	UNMANNED TELECOMMUNICATIONS
POWER COMPANY:	SCE
ADRESS:	1 INNOVATION WAY POMONA, CA 91768

PROJECT TEAM

PROJECT MANAGER:
M SQUARED WIRELESS
1367 CALLE AVANZADO
SAN CLEMENTE, CA 92673

SAC/ZONING/PERMITTING:
M SQUARED WIRELESS
1367 CALLE AVANZADO
SAN CLEMENTE, CA 92673

RF ENGINEER:
AT&T
1452 EDINGER AVE.
TUSTIN, CA 92618
CONTACT: KARLO DAVINAGRACIA
PHONE: (714) 566-7310
EMAIL: KD270J@ATT.COM

ENGINEER:
M SQUARED WIRELESS
1367 CALLE AVANZADO
SAN CLEMENTE, CA 92673

SENIOR TECHNICAL PROJECT MANAGER:
AT&T
1452 EDINGER AVE.
TUSTIN, CA 92618
CONTACT: OMAR MERE
PHONE: (562) 293-6429
EMAIL: OM5039@ATT.COM

AREA MAPS

VICINITY MAP

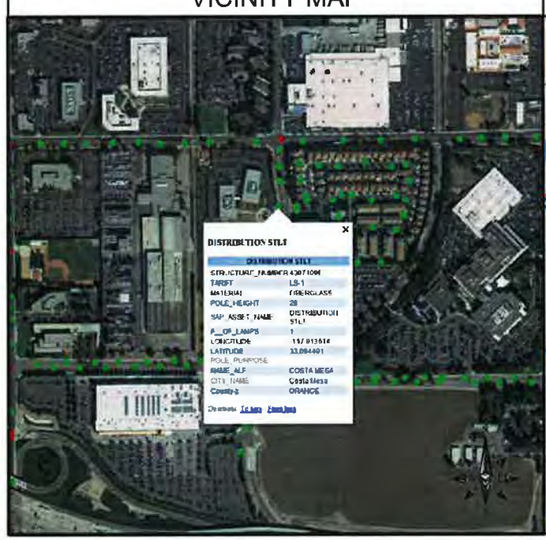

LOCATION MAP

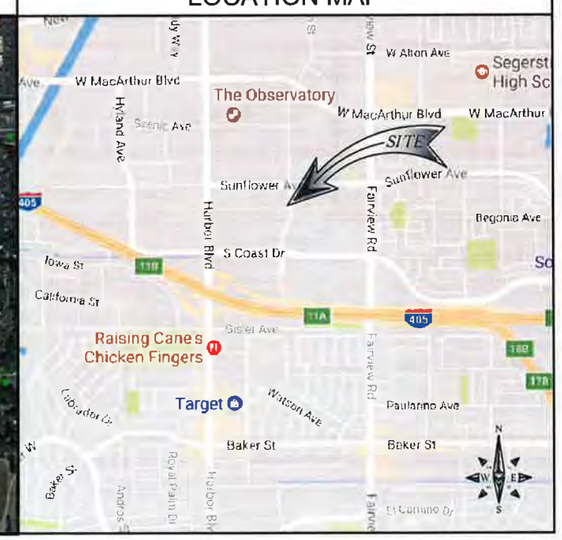

DRIVING DIRECTIONS

DIRECTIONS FROM AT&T OFFICE:

DIRECTION ARE TAKEN FROM
1452 EDINGER AVE.
TUSTIN, CA 92780

1. TURN LEFT ONTO EDINGER AVE
2. TURN LEFT ONTO 55 S
3. TURN RIGHT ONTO 32ND ST
4. TURN RIGHT ONTO W BALBOA BLVD
5. TURN RIGHT ONTO 41ST ST
6. TURN LEFT AT THE 1ST CROSS ST ONTO SEASHORE
7. TURN LEFT AT THE 1ST CROSS STREET ONTO 40TH ST

DESTINATION WILL BE ON THE LEFT.
3333 SUSAN ST.
COSTA MESA, CA 92626

DIG ALERT

811

Dig Alert
Know what's below.
Call before you dig.

CALIFORNIA SOUTH
Call Two Working Days Before You Dig!
811 / 800-227-2600

DO NOT SCALE DRAWINGS

SUBCONTRACTOR SHALL VERIFY ALL PLANS & EXISTING DIMENSIONS & CONDITIONS ON THE JOB SITE & SHALL IMMEDIATELY NOTIFY THE ENGINEER IN WRITING OF ANY DISCREPANCIES BEFORE PROCEEDING WITH THE WORK OR BE RESPONSIBLE FOR SAME.

CONSTRUCTION DRAWING

IF USING 11"x17" PLOT, DRAWING WILL BE HALF SCALE

DRAWING INDEX

SHEET NO:	SHEET TITLE
T-1	TITLE SHEET
GN-1	GENERAL NOTES
A-1	SITE PLAN
A-2	ELEVATIONS
A-3	ELEVATIONS
A-4	SITE IMAGE
D-1	DETAILS
S-1	POLE DETAILS
S-2	POLE FOUNDATION DETAILS
E-1	ELECTRICAL & GROUNDING DETAILS

CODE COMPLIANCE

ALL WORK AND MATERIALS SHALL BE PERFORMED AND INSTALLED IN ACCORDANCE WITH THE CURRENT EDITIONS OF THE FOLLOWING CODES AS ADOPTED BY THE LOCAL GOVERNING AUTHORITIES. NOTHING IN THESE PLANS IS TO BE CONSTRUCTED TO PERMIT WORK NOT CONFORMING TO THESE CODES.

1. 2016 CALIFORNIA ADMINISTRATIVE CODE
2. 2016 CALIFORNIA BUILDING CODE
3. 2016 CALIFORNIA ELECTRIC CODE
4. 2016 CALIFORNIA MECHANICAL CODE
5. 2016 CALIFORNIA PLUMBING CODE
6. 2016 CALIFORNIA FIRE CODE
7. ANY LOCAL BUILDING CODE AMENDMENTS TO THE ABOVE
8. CITY/COUNTY ORDINANCES

HANDICAP REQUIREMENTS:

FACILITY IS UNMANNED AND NOT FOR HUMAN HABITATION. HANDICAPPED ACCESS NOT REQUIRED IN ACCORDANCE WITH CALIFORNIA ADMINISTRATIVE STATE CODE PART 2, TITLE 24, CHAPTER 11B. SECTION 1103B.

GENERAL NOTES

THE FACILITY IS UNMANNED AND NOT FOR HUMAN HABITATION. A TECHNICIAN WILL VISIT THE SITE AS REQUIRED FOR ROUTINE MAINTENANCE. THE PROJECT WILL NOT RESULT IN ANY SIGNIFICANT DISTURBANCE OR EFFECT ON DRAINAGE; NO SANITARY SEWER SERVICE, POTABLE WATER, OR TRASH DISPOSAL IS REQUIRED AND NO COMMERCIAL SIGNAGE IS NEW.

at&t

ERICSSON
330 COMMERCE, STE. 200
IRVINE, CA 92602

M SQUARED WIRELESS
1367 CALLE AVANZADO
SAN CLEMENTE CA 92673 (949) 361-6024

DRAWN BY:	DGM
CHECKED BY:	MM

REV	DATE	DESCRIPTION
E	02/16/18	100% CONSTRUCTION
D	02/05/18	100% CONSTRUCTION
C	01/15/18	100% CONSTRUCTION
B	12/05/17	95% CONSTRUCTION
A	11/07/17	90% CONSTRUCTION

IT IS A VIOLATION OF LAW FOR ANY PERSON, UNLESS THEY ARE ACTING UNDER THE DIRECTION OF A LICENSED PROFESSIONAL ENGINEER, TO ALTER THIS DOCUMENT.

SITE ID: HBNPB 22A
3333 SUSAN ST
COSTA MESA, CA, 92626

SHEET TITLE
TITLE SHEET

SHEET NUMBER
T-1

Legend			
NEW ANTENNA	GROUT OR PLASTER	—T—T— TELCO RUN	5/8" X 10'-0" ,CU. GND ROD IN TEST WELL 30" MIN. BELOW GRADE.
EXISTING ANTENNA	(E) BRICK	—T/E— POWER/TELCO RUN	CHEMICAL GROUND ROD (XIT GROUND ROD)
GROUND ROD	(E) MASONRY	GROUNDING CONDUCTOR	CADWELD CONNECTION
GROUND BUS BAR	CONCRETE	GROUNDING CONDUCTOR	MECHANICAL CONNECTION
MECHANICAL GRND. CONN.	EARTH	CONDUIT UNDERGROUND	HALO GROUND CONNECTION
CADWELD	GRAVEL	FUSE, SIZE AND TYPE AS INDICATED.	CIRCUIT BREAKER
GROUND ACCESS WELL	PLYWOOD	SAFETY SWITCH, 2P-240V-60A W/60A FUSES, NEMA 3R ENCLOSURE, SQ D CATALOG NO. H222NRB	UTILITY METER BASE
ELECTRIC BOX	SAND	MANUAL TRANSFER SWITCH, 2P-240V-200A, NO FUSE, NEMA 3R ENCLOSURE	TRANSFORMER
TELEPHONE BOX	WOOD CONT.	LIGHTING FIXTURE, FLUORESCENT, 10.94" x 4'-0", 2/40W, SURFACE MOUNTING TYPE, HUBBELL LIGHTING CATALOG #WSW232T	STEPDOWN TRANSFORMER
LIGHT POLE	WOOD BLOCKING	LIGHTING FIXTURE, FLUORESCENT, 10.94" x 8'-0", 2/95W, SURFACE MOUNTING TYPE, HUBBELL LIGHTING CATALOG #TWSM232T	RECEPTACLE, 2P-3W-125V-15A, DUPLEX, GROUND TYPE, HUBBEL CATALOG #5362
FND. MONUMENT	STEEL	LIGHTING FIXTURE, HIGH PRESSURE SODIUM, 1/70W, WALL MOUNTING TYPE, HUBBELL LIGHTING CATALOG #NRG-307 OR 1/50W, HUBBELL LIGHTING CATALOG #NRG-121	S TOGGLE SWITCH, 1P-125V-15A, HUBBELL CATALOG #HBL 1201CN
SPOT ELEVATION	CENTERLINE	EXIT SIGN, THERMOPLASTIC LED, SINGLE FACE, UNIVERSAL MOUNTING, W/BATTERY PACK, HUBBELL LIGHTING CATALOG #PRB	S_{WP} TOGGLE SWITCH, 1P-120V-15A, "WP"
SET POINT	PROPERTY/LEASE LINE	EXIT COMBINATION, EXIT SIGN & EMERGENCY LIGHTING, HUBBELL LIGHTING CATALOG #PRC	IONIZATION SMOKE DETECTOR W/ALARM HORN & AUXILIARY CONTACT, 120 VAC, GENTEX PART NO. 7100F
REVISION	MATCH LINE	EMERGENCY LIGHTING, 2/50W, HUBBELL LIGHTING CATALOG #HE6-50-2-R91	POLE
GRID REFERENCE	WORK POINT	LIGHTING FIXTURE, INCANDESCENT, 1/100W, WALL MOUNTING TYPE, HUBBELL LIGHTING CATALOG #BRH-100-06-1	(N) POLE MOUNTED XFMER
DETAIL REFERENCE	GROUND CONDUCTOR	LIGHTING FIXTURE, HALOGEN, QUARTZ, 1/300W, HUBBELL LIGHTING CATALOG #QL-505	(E) POLE MOUNTED XFMR
ELEVATION REFERENCE	—A— COAXIAL CABLE	LIGHTING FIXTURE, 1/175W. METAL HALIDE, HUBBELL CAT #MIC-0175H-336	(N) PAD MOUNTED XFMER
SECTION REFERENCE	—OU— OVERHEAD SERVICE CONDUCTORS	5/8" X 10'-0" ,CU. GND ROD 30" MIN. BELOW GRADE.	(E) PAD MOUNTED XFMER
	—X— CHAIN LINK FENCING		
	OVERHEAD TELEPHONE/OVERHEAD POWER		
	—OT— OVERHEAD TELEPHONE LINE		
	—OP— OVERHEAD POWER LINE		
	—E— POWER RUN		
	—F/P— FIBER/POWER RUN		

1

ABBREVIATIONS

A	AMPERE	EMT.	ELECTRICAL METALLIC TUBING	MTD.	MOUNTED	T.O.F.	TOP OF FOUNDATION
A.B.	ANCHOR BOLT	E.N.	EDGE NAIL	MTG.	MOUNTING	T.O.P.	TOP OF PLATE (PARAPET)
ABV.	ABOVE	ENCL.	ENCLOSURE	MTL.	METAL	T.O.S.	TOP OF STEEL
AC	ALTERNATE CURRENT/AIR CONDITIONER	ENG.	ENGINEER	MTS.	MANUAL TRANSFER SWITCH	T.O.W.	TOP OF WALL
ACCA	ANTENNA CABLE COVER ASSEMBLY	EQ.	EQUAL	N	NEUTRAL	TYP.	TYPICAL
ADD'L	ADDITIONAL	EXST.(E)	EXISTING	(N)	NEW	U.G.	UNDER GROUND
A.F.F.	ABOVE FINISHED FLOOR	EXP.	EXPANSION	NEMA	NATIONAL ELECTRICAL MANUFACTURERS ASSOC.	U.L.	UNDERWRITERS LABORATORY INC.
A.F.G.	ABOVE FINISHED GRADE	EXT.	EXTERIOR	NO.(#)	NUMBER	UMTS	UNIVERSAL MOBIL TECH. SYS. (3G MOBILE TECH.)
AIC	AMPERE INTERRUPTING CAPACITY	FAB.	FABRICATION(OR)	N.T.S.	NOT TO SCALE	U.N.O.	UNLESS NOTED OTHERWISE
ALUM.	ALUMINUM	FAC.	FACTOR	OBIF	OPTICAL BASEBAND INTERFACE	V	VOLT
ALT.	ALTERNATE	F/A	FIRE ALARM	OH	OVERHEAD	VAC	VOLT ALTERNATING CURRENT
ANT.	ANTENNA	F.F.	FINISH FLOOR	O.C.	ON CENTER	V.I.F.	VERIFY IN FIELD
APPROX.	APPROXIMATE(LY)	F.G.	FINISH GRADE	OPNG.	OPENING	W	WATT OR WIRE
ARCH.	ARCHITECT(URAL)	FIN.	FINISH(ED)	P	POLE	WD	WIDE(WIDTH)
AT.	AMPERE TRIP	FLR.	FLOOR	P/C	PRECAST CONCRETE	W/	WITH
AWG.	AMERICAN WIRE GAUGE	FLUOR	FLUORESCENT	PCS	PERSONAL COMMUNICATION SERVICES	W/O	WITHOUT
BATT.	BATTERY	FDN.	FOUNDATION	PH	PHASE	WD.	WOOD
BD.	BOARD	F.O.C.	FACE OF CONCRETE	PLY.	PLYWOOD	W.P.	WEATHERPROOF
BLDG.	BUILDING	F.O.M.	FACE OF MASONRY	PNLBD	PANELBOARD	WT.	WEIGHT
BLK.	BLOCK	F.O.S.	FACE OF STUD	PPC	POWER PROTECTION CABINET	XFER	TRANSFER
BLKG.	BLOCKING	F.O.W.	FACE OF WALL	PRC	PRIMARY RADIO CABINET	XFMR	TRANSFORMER
BM.	BEAM	F.S.	FINISH SURFACE	PRI	PRIMARY	XLPE	CROSS-LINK POLYETHYLENE
B.N.	BOUNDARY NAILING	FT.(')	FOOT (FEET)	P.S.F.	POUNDS PER SQUARE FOOT	℄	CENTERLINE
BR.	BRANCH	FTG.	FOOTING	P.S.I.	POUNDS PER SQUARE INCH	℘	PLATE, PROPERTY LINE
BRKR.	BREAKER	FU	FUSE	P.T.	PRESSURE TREATED		
BTCW.	BARE TINNED COPPER WIRE	G	GROUND	PWR.	POWER (CABINET)		
BTS.	BASE TRANSMISSION SYSTEM	GR	GROWTH (CABINET)	QTY.	QUANTITY		
B.O.F.	BOTTOM OF FOOTING	GA.	GAUGE	RAD.(R)	RADIUS		
B/U	BACK-UP CABINET	GEN.	GENERATOR	RBS	RADIO BASE STATION (BASE STATION 3G NETWORKS)		
C	CONDUIT	GI.	GALVANIZE(D)	RCPT.	RECEPTACLE		
CAB.	CABINET	G.F.C. I.	GROUND FAULT CIRCUIT INTERRUPTER	REF.	REFERENCE		
CANT.	CANTILEVER(ED)	GLB. (GLU-LAM)	GLUE LAMINATED BEAM	REINF.	REINFORCEMENT(ING)		
CB.	CIRCUIT BREAKER	GND	GROUND	REQ'D.	REQUIRED		
CDMA	CODE-DIVISION MULTIPLE ACCESS (2G & 3G)	GPS	GLOBAL POSITIONING SYSTEM	RGS.	RIGID GALVANIZED STEEL		
CDUK	CONSOLIDATION DISTRIBUTION UNIT KIT	GRND.	GROUND	RRU	REMOTE RADIO UNIT (RADIO TRANSCEIVER)		
C.I.P.	CAST IN PLACE	GSM	GLOBAL SYSTEM MOBILE (2G+ MOBILE TECH.)	RX-AIT	RECEIVER AIR INTERFACE TRAY		
CKT.	CIRCUIT	HDBC	HARD DRAWN COPPER WIRE	SAF	SAFETY		
CLG.	CEILING	HDR.	HEADER	SCH.	SCHEDULE		
CLR.	CLEAR	HGR.	HANGER	SDBC	SOFT DRAWN BARE COPPER		
CMU	CONCRETE MASONRY UNIT (JAMB BLOCKS)	HPS	HIGH PRESSURE SODIUM	SEC	SECONDARY		
COL.	COLUMN	HT.	HEIGHT	SHT.	SHEET		
CONC.	CONCRETE	ICGB.	ISOLATED COPPER GROUND BUS	SIM.	SIMILAR		
CONN.	CONNECTION(OR)	IN.(")	INCH(ES)	S.N.	SOLID NEUTRAL		
CONST.	CONSTRUCTION	INT.	INTERIOR	SPEC.	SPECIFICATION(S)		
CONT.	CONTINUOUS	LB.(#)	POUND(S)	SQ.	SQUARE		
d	PENNY (NAILS)	L.B.	LAG BOLTS	S.S.	STAINLESS STEEL		
DBL.	DOUBLE	L.F.	LINEAR FEET (FOOT)	STD.	STANDARD		
DC	DIRECT CURRENT	LG.	LENGTH	STL.	STEEL		
DEM.	DEMAND	L	LONG(ITUDINAL)	STRUC.	STRUCTURAL		
DEPT.	DEPARTMENT	LPS	LOW PRESSURE SODIUM	SURF	SURFACE		
D.F.	DOUGLAS FIR	LTE	LONG TERM EVOLUTION (4G MOBILE TECH.)	SW	SWITCH		
DIA.	DIAMETER	MAS.	MASONRY	TEL.	TELEPHONE		
DIAG.	DIAGONAL	MAX.	MAXIMUM	TEMP.	TEMPORARY		
DIM.	DIMENSION	M.B.	MACHINE BOLT	THK.	THICK(NESS)		
DWG.	DRAWING(S)	MECH.	MECHANICAL	TMAS	TOWER MOUNTED AMPLIFIER (DC SUPPLY VOLTAGE)		
DWL.	DOWEL(S)	MFR.	MANUFACTURER	T.N.	TOE NAIL		
EA.	EACH	MIN.	MINIMUM	T.O.A.	TOP OF ANTENNA		
EGR.	EMERGENCY GENERATOR RECEPTACLE	MISC.	MISCELLANEOUS	T.O.C.	TOP OF CURB		
EL.	ELEVATION	MLO	MAIN LUGS ONLY				
ELEC.	ELECTRICAL						
ELEV.	ELEVATOR						

ABBREVIATIONS 2

NOTES FOR EXISTING AT&T CELL SITES:

1. PRIOR TO THE SUBMISSION OF BIDS, THE BIDDING SUBCONTRACTOR SHALL VISIT THE CELL SITE TO FAMILIARIZE WITH THE EXISTING CONDITIONS AND TO CONFIRM THAT THE WORK CAN BE ACCOMPLISHED AS SHOWN ON THE CONSTRUCTION DRAWINGS. ANY DISCREPANCY FOUND SHALL BE BROUGHT TO THE ATTENTION OF CONTRACTOR.
2. SUBCONTRACTOR SHALL VERIFY ALL EXISTING DIMENSIONS AND CONDITIONS PRIOR TO COMMENCING ANY WORK. ALL DIMENSIONS OF EXISTING CONSTRUCTION SHOWN ON THE DRAWINGS MUST BE VERIFIED. SUBCONTRACTOR SHALL NOTIFY THE CONTRACTOR OF ANY DISCREPANCIES PRIOR TO ORDERING MATERIAL OR PROCEEDING WITH CONSTRUCTION.
3. THE EXISTING CELL SITE IS IN FULL COMMERCIAL OPERATION. ANY CONSTRUCTION WORK BY SUBCONTRACTOR SHALL NOT DISRUPT THE EXISTING NORMAL OPERATION. ANY WORK ON EXISTING EQUIPMENT MUST BE COORDINATED WITH CONTRACTOR. ALSO, WORK SHOULD BE SCHEDULED FOR AN APPROPRIATE MAINTENANCE WINDOW USUALLY IN LOW TRAFFIC PERIODS AFTER MIDNIGHT.
4. SINCE THE CELL SITE IS ACTIVE, ALL SAFETY PRECAUTIONS MUST BE TAKEN WHEN WORKING AROUND HIGH LEVELS OF ELECTROMAGNETIC RADIATION. EQUIPMENT SHOULD BE SHUTDOWN PRIOR TO PERFORMING ANY WORK THAT COULD EXPOSE THE WORKERS TO DANGER. PERSONAL RF EXPOSURE MONITORS ARE ADVISED TO BE WORN TO ALERT OF ANY DANGEROUS EXPOSURE LEVELS.
5. SUBCONTRACTOR SHALL DETERMINE ACTUAL ROUTING OF CONDUIT, POWER AND T1 CABLES, GROUNDING CABLES AS SHOWN ON THE POWER, GROUNDING AND TELCO PLAN DRAWING. SUBCONTRACTOR SHALL UTILIZE EXISTING TRAYS AND/OR SHALL ADD NEW TRAYS AS NECESSARY. SUBCONTRACTOR SHALL CONFIRM THE ACTUAL ROUTING WITH THE CONTRACTOR.
6. SUBCONTRACTOR SHALL LEGALLY AND PROPERLY DISPOSE OF ALL SCRAP MATERIALS SUCH AS COAXIAL CABLES AND OTHER ITEMS REMOVED FROM THE EXISTING FACILITY. ANTENNAS REMOVED SHALL BE RETURNED TO THE OWNER'S DESIGNATED LOCATION.

EXISTING AT&T CELL SITE NOTES 3

1. THE FACILITY IS AN UNOCCUPIED DIGITAL TELECOMMUNICATION FACILITY.
2. PLANS ARE NOT TO BE SCALED AND ARE INTENDED TO BE A DIAGRAMMATIC OUTLINE ONLY, UNLESS NOTED OTHERWISE. THE WORK SHALL INCLUDE FURNISHING MATERIALS, EQUIPMENT, APPURTENANCES AND LABOR NECESSARY TO COMPLETE ALL INSTALLATIONS AS INDICATED ON THE DRAWINGS.
3. PRIOR TO THE SUBMISSION OF BIDS, THE CONTRACTORS SHALL VISIT THE JOB SITE AND BE RESPONSIBLE FOR ALL CONTRACT DOCUMENTS, FIELD CONDITIONS AND DIMENSIONS, AND CONFIRMING THAT THE WORK MAY BE ACCOMPLISHED AS SHOWN PRIOR TO PROCEEDING WITH CONSTRUCTION. ANY DISCREPANCIES ARE TO BE BROUGHT TO THE ATTENTION OF THE IMPLEMENTATION ENGINEER AND ENGINEER PRIOR TO PROCEEDING WITH THE WORK.
4. THE CONTRACTOR SHALL OBTAIN, IN WRITING, AUTHORIZATION TO PROCEED BEFORE STARTING WORK ON ANY ITEM NOT CLEARLY DEFINED OR IDENTIFIED BY THE CONTRACT DOCUMENTS.
5. THE CONTRACTOR SHALL INSTALL ALL EQUIPMENT AND MATERIALS IN ACCORDANCE WITH MANUFACTURER'S RECOMMENDATIONS UNLESS SPECIFICALLY INDICATED OTHERWISE OR WHERE LOCAL CODES OR REGULATIONS TAKE PRECEDENCE.
6. ALL WORK PERFORMED AND MATERIALS INSTALLED SHALL BE IN STRICT ACCORDANCE WITH ALL APPLICABLE CODES, REGULATIONS AND ORDINANCES. CONTRACTOR SHALL GIVE ALL NOTICES AND COMPLY WITH ALL LAWS, ORDINANCES, RULES, REGULATIONS AND LAWFUL ORDERS OF ANY PUBLIC AUTHORITY REGARDING THE PERFORMANCE OF THE WORK. MECHANICAL AND ELECTRICAL SYSTEMS SHALL BE INSTALLED IN ACCORDANCE WITH ALL APPLICABLE MUNICIPAL AND UTILITY COMPANY SPECIFICATIONS, AND LOCAL AND STATE JURISDICTIONAL CODES, ORDINANCES AND APPLICABLE REGULATIONS.
7. THE GENERAL CONTRACTOR SHALL SUPERVISE AND DIRECT THE WORK, USING THE BEST SKILLS AND ATTENTION. THE CONTRACTOR SHALL BE SOLELY RESPONSIBLE FOR ALL CONSTRUCTION MEANS, METHODS, TECHNIQUES, SEQUENCES AND PROCEDURES AND FOR COORDINATING ALL PORTIONS OF THE WORK UNDER THE CONTRACT INCLUDING CONTACT AND COORDINATION WITH THE IMPLEMENTATION ENGINEER AND WITH THE LANDLORD'S AUTHORIZED REPRESENTATIVE.
8. SEAL PENETRATIONS THROUGH FIRE RATED AREAS WITH U.L. LISTED AND FIRE CODE APPROVED MATERIALS.
9. PROVIDE A PORTABLE FIRE EXTINGUISHER WITH A RATING OF NOT LESS THAN 2-A OR 2-A10BC WITHIN 75 FEET TRAVEL DISTANCE TO ALL PORTIONS OF THE PROJECT AREA DURING CONSTRUCTION.
10. DETAILS ARE INTENDED TO SHOW END RESULT OF DESIGN. MINOR MODIFICATIONS MAY BE REQUIRED TO SUIT JOB DIMENSIONS OR CONDITIONS, AND SUCH MODIFICATIONS SHALL BE INCLUDED AS PART OF THE WORK.
11. REPRESENTATIONS OF TRUE NORTH, OTHER THAN THOSE FOUND ON THE PLOT OF SURVEY DRAWING (SHEET LS1 OR SHEET C-1), SHALL NOT BE USED TO IDENTIFY OR ESTABLISH THE BEARING OF TRUE NORTH AT THE SITE. THE CONTRACTOR SHALL RELY SOLELY ON THE PLOT OF SURVEY DRAWING AND ANY SURVEYOR'S MARKINGS AT THE SITE FOR THE ESTABLISHMENT OF TRUE NORTH, AND SHALL NOTIFY THE ENGINEER PRIOR TO PROCEEDING WITH THE WORK IF ANY DISCREPANCY IS FOUND BETWEEN THE VARIOUS ELEMENTS OF THE WORKING DRAWINGS AND THE TRUE NORTH ORIENTATION AS DEPICTED ON THE CIVIL SURVEY. THE CONTRACTOR SHALL ASSUME SOLE LIABILITY FOR ANY FAILURE TO NOTIFY THE ENGINEER.
12. THE CONTRACTOR SHALL MAKE NECESSARY PROVISIONS TO PROTECT EXISTING IMPROVEMENTS, PAVING, CURBS, VEGETATION, GALVANIZED SURFACES, ETC., AND UPON COMPLETION OF WORK REPAIR ANY DAMAGE THAT OCCURRED DURING CONSTRUCTION TO THE SATISFACTION OF AT&T.
13. KEEP GENERAL AREA CLEAN, HAZARD FREE, AND DISPOSE OF ALL DIRT, DEBRIS, RUBBISH AND REMOVE EQUIPMENT NOT SPECIFIED AS REMAINING ON THE PROPERTY. LEAVE PREMISES IN CLEAN CONDITION AND FREE FROM PAINT SPOTS, DUST OR SMUDGES OF ANY NATURE.
14. PENETRATIONS OF ROOF MEMBRANES SHALL BE PATCHED/FLASHED AND MADE WATERTIGHT USING LIKE MATERIALS IN ACCORDANCE WITH NRCA ROOFING STANDARDS AND DETAILS. CONTRACTOR SHALL OBTAIN DETAILING CLARIFICATION FOR SITE-SPECIFIC CONDITIONS FROM ENGINEER, IF NECESSARY, BEFORE PROCEEDING.
15. BEFORE ORDERING AND/OR BEFORE FABRICATING/CONSTRUCTING/INSTALLING ANY ITEMS, VERIFY THE TYPES AND QUANTITIES.
16. CONTRACTOR SHALL PROVIDE SITE FOREMAN WITH A CELLULAR PHONE AND PAGER, AND KEEP SAME ON SITE WHENEVER PERSONNEL ARE ON SITE.
17. THE CONTRACTOR SHALL VERIFY ALL DIMENSIONS AND CONDITIONS ON THE SITE AND NOTIFY THE PROJECT MANAGER OF ANY DISCREPANCIES BEFORE STARTING ANY WORK.
18. CONTRACTOR TO PROVIDE COMPLETE SET OF AS BUILT DRAWINGS WITHIN 10 WORKING DAYS OF PROJECT COMPLETION.
19. CONTRACTOR IS TO EXCAVATE 6" BELOW EXISTING GRADE AND SPRAY WITH WEED CONTROL. REPLACE WITH CLASS II AGGREGATE BASE AND CRUSHED WASHED ROCK. AS SPECIFIED ON SITE PLAN.
20. CONTRACTOR SHALL PROVIDE TOILET FACILITY DURING ALL PHASES OF CONSTRUCTION.
21. PRIOR TO THE COMMENCEMENT OF CONSTRUCTION OR THE FABRICATION OF MATERIALS TO BE INSTALLED AT THE SITE, THE CONTRACTOR SHALL FIELD VERIFY ALL DIMENSIONS INCLUDING AS-BUILT DIMENSIONS OF EXISTING STRUCTURES OR STRUCTURAL ELEMENTS HAVING A BEARING ON THE SCOPE OF THE WORK TO BE PERFORMED. IF ANY DISCREPANCY IS FOUND BETWEEN THE VARIOUS ELEMENTS OF THE WORKING DRAWINGS AND THE DIMENSIONS OR CONDITIONS FOUND TO BE EXISTING IN THE FIELD, THE CONTRACTOR SHALL NOTIFY THE ENGINEER AND OBTAIN DESIGN RESOLUTION PRIOR TO PROCEEDING WITH THE PORTION(S) OF THE WORK AFFECTED. THE CONTRACTOR SHALL ASSUME SOLE LIABILITY FOR ANY FAILURE TO SO NOTIFY THE ENGINEER AND OBTAIN RESOLUTION BEFORE PROCEEDING.

GENERAL NOTES 4

at&t

ERICSSON
330 COMMERCE, STE. 200
IRVINE, CA 92602

M SQUARED WIRELESS
1387 CALLE AVANZADO

DRAWN BY: DGM
CHECKED BY: MM

REV	DATE	DESCRIPTION
E	02/16/18	100% CONSTRUCTION
D	02/05/18	100% CONSTRUCTION
C	01/15/18	100% CONSTRUCTION
B	12/05/17	95% CONSTRUCTION
A	11/07/17	90% CONSTRUCTION

IT IS A VIOLATION OF LAW FOR ANY PERSON, UNLESS THEY ARE ACTING UNDER THE DIRECTION OF A LICENSED PROFESSIONAL ENGINEER, TO ALTER THIS DOCUMENT.

SITE ID: HBNPB 22A
3333 SUSAN ST
COSTA MESA, CA, 92626

SHEET TITLE
GENERAL NOTES

SHEET NUMBER
GN-1

[redacted]

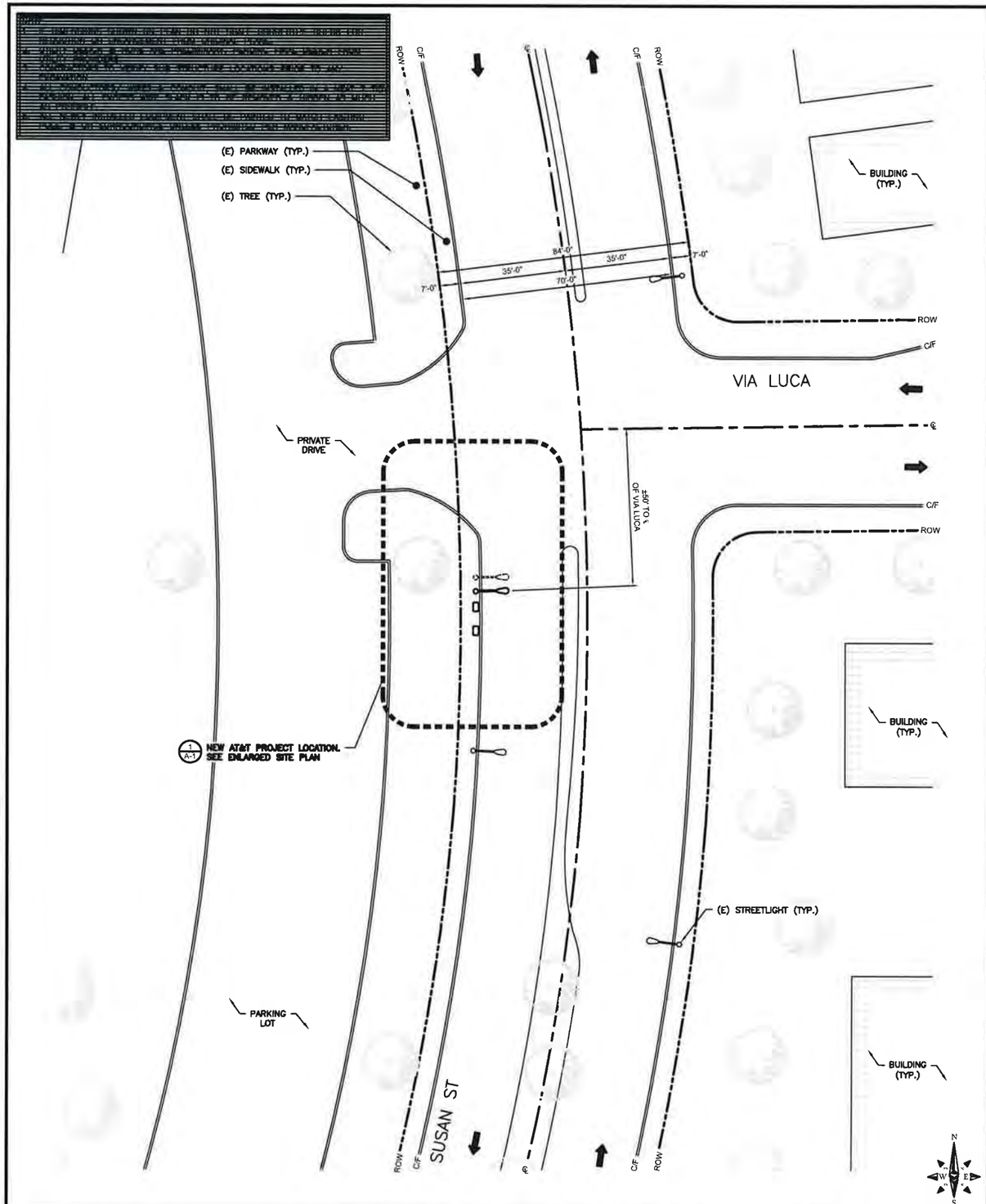

SITE PLAN

24"x36" SCALE: 1" = 20'-0"
11"x17" SCALE: 1" = 40'-0"

0" 10' 20' 40'

3

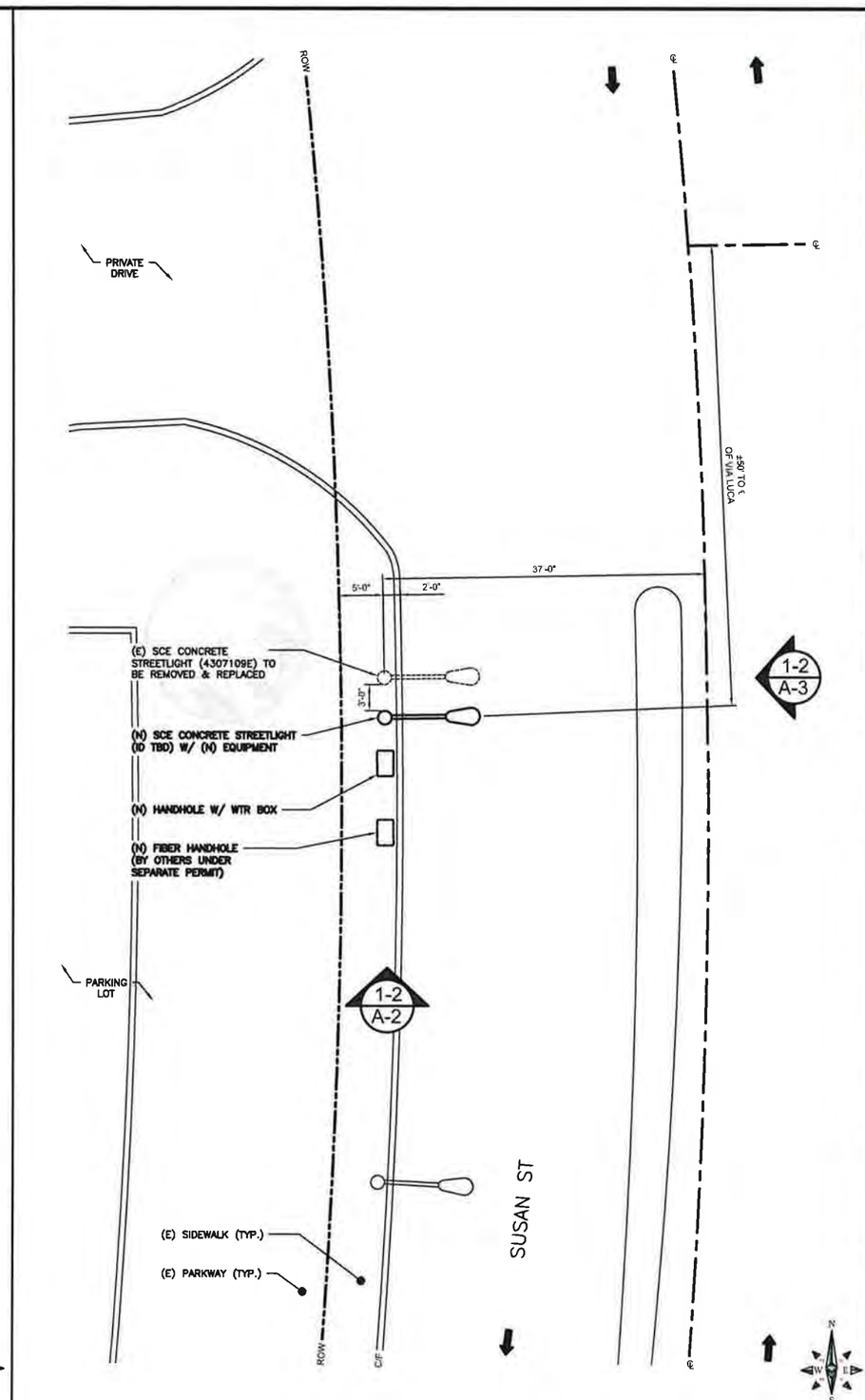

ENLARGED SITE PLAN

24"x36" SCALE: 1/8" = 1'-0"
11"x17" SCALE: 1/16" = 1'-0"

0" 4' 8' 16'

2

at&t

ERICSSON
330 COMMERCE, STE. 200
IRVINE, CA 92602

M SQUARED WIRELESS
1367 CALLE AVANZADO
SAN CLEMENTE CA 92673 (949) 391-0024

DRAWN BY:	DGM
CHECKED BY:	MM

REV	DATE	DESCRIPTION
E	02/16/18	100% CONSTRUCTION
D	02/05/18	100% CONSTRUCTION
C	01/15/18	100% CONSTRUCTION
B	12/05/17	95% CONSTRUCTION
A	11/07/17	90% CONSTRUCTION

IT IS A VIOLATION OF LAW FOR ANY PERSON, UNLESS THEY ARE ACTING UNDER THE DIRECTION OF A LICENSED PROFESSIONAL ENGINEER, TO ALTER THIS DOCUMENT

SITE ID: HBNPB 22A
3333 SUSAN ST
COSTA MESA, CA, 92626

SHEET TITLE
SITE PLAN

SHEET NUMBER
A-1

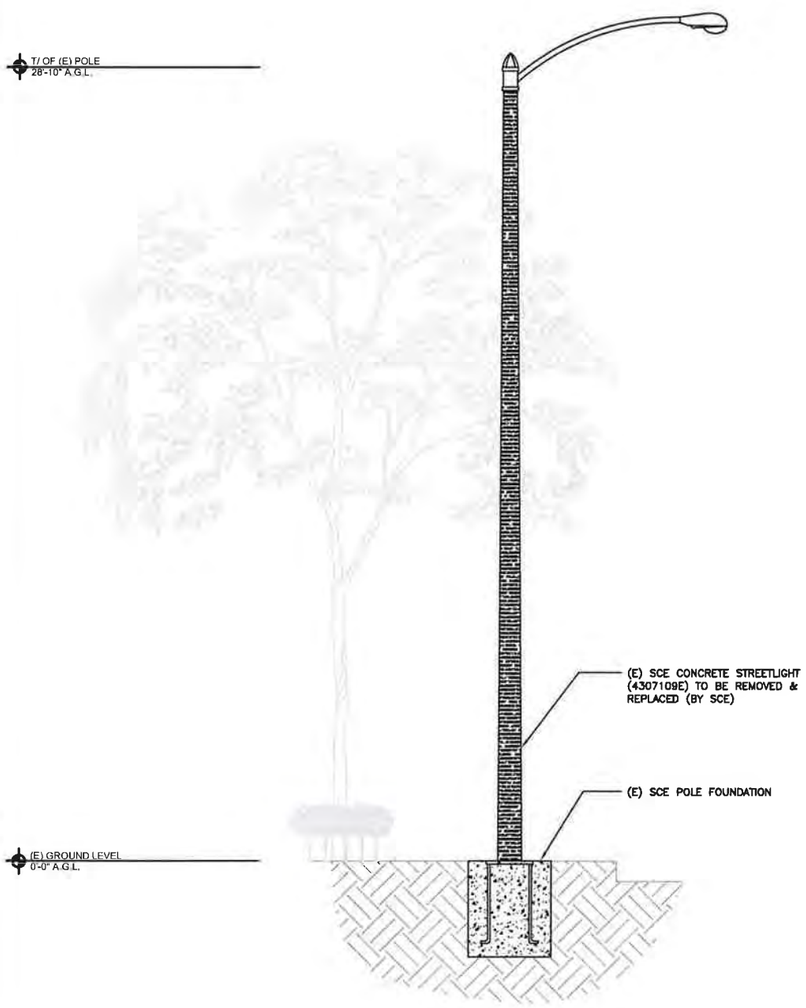

EXISTING SOUTH ELEVATION

24"x36" SCALE: 3/8" = 1'-0"
11"x17" SCALE: 3/16" = 1'-0"

0" 1' 2' 4'

2

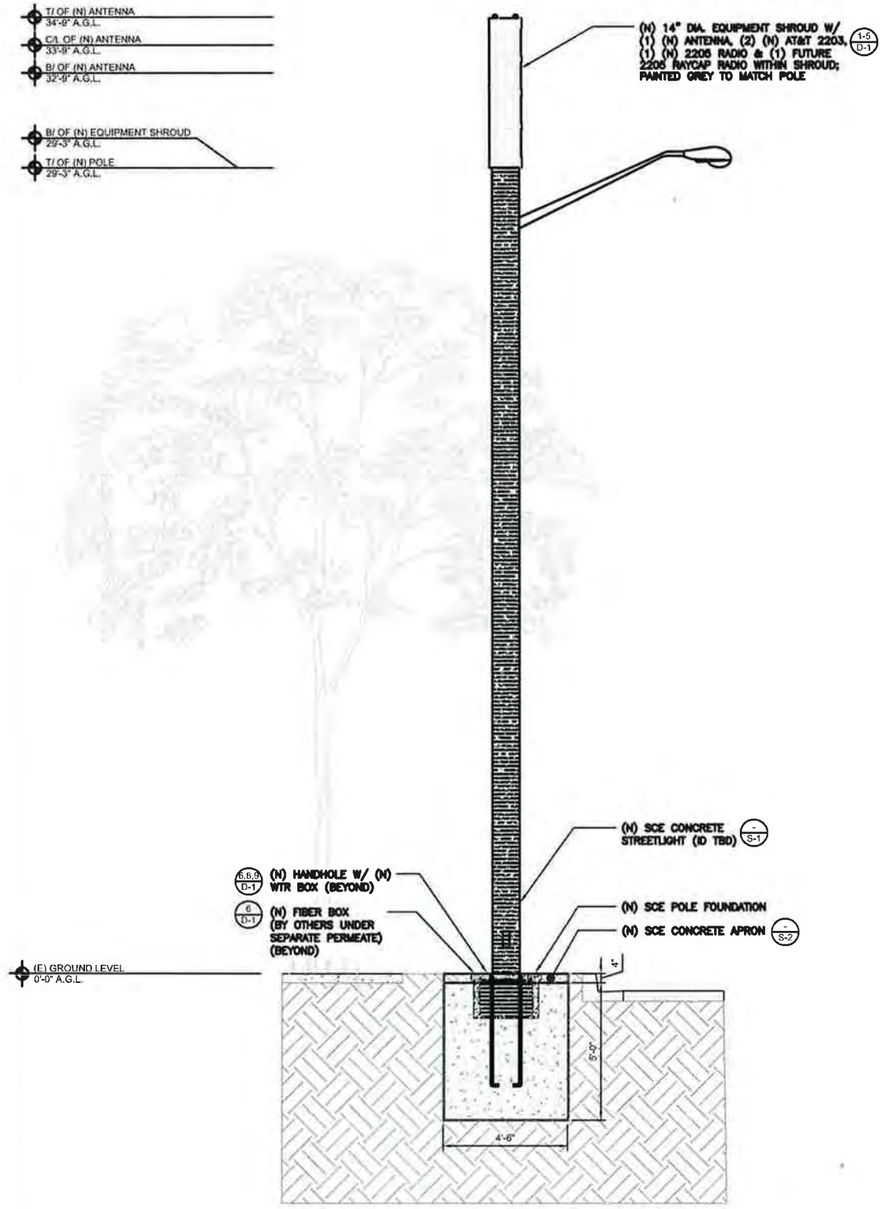

NEW SOUTH ELEVATION

24"x36" SCALE: 3/8" = 1'-0"
11"x17" SCALE: 3/16" = 1'-0"

0" 1' 2' 4'

1

at&t

ERICSSON
330 COMMERCE, STE. 200
IRVINE, CA 92602

M SQUARED WIRELESS
1367 CALLE AVANZADO
SAN CLEMENTE CA 92673 (949) 291-0024

DRAWN BY:	DGM
CHECKED BY:	MM

REV	DATE	DESCRIPTION
E	02/16/18	100% CONSTRUCTION
D	02/05/18	100% CONSTRUCTION
C	01/15/18	100% CONSTRUCTION
B	12/05/17	95% CONSTRUCTION
A	11/07/17	90% CONSTRUCTION

IT IS A VIOLATION OF LAW FOR ANY PERSON, UNLESS THEY ARE ACTING UNDER THE DIRECTION OF A LICENSED PROFESSIONAL ENGINEER, TO ALTER THIS DOCUMENT.

SITE ID: HBNPB 22A
3333 SUSAN ST
COSTA MESA, CA, 92626

SHEET TITLE
ELEVATIONS

SHEET NUMBER
A-2

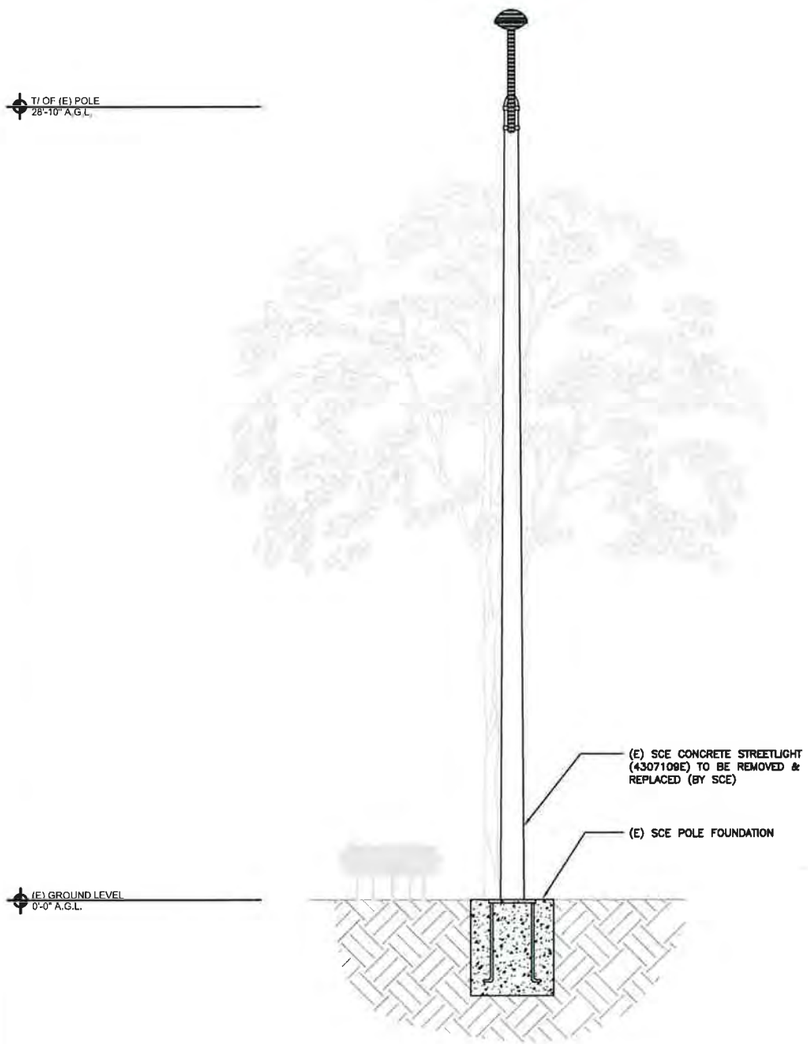

EXISTING EAST ELEVATION

24"x36" SCALE: 3/8" = 1'-0"
11"x17" SCALE: 3/16" = 1'-0"

0" 1' 2' 4'

2

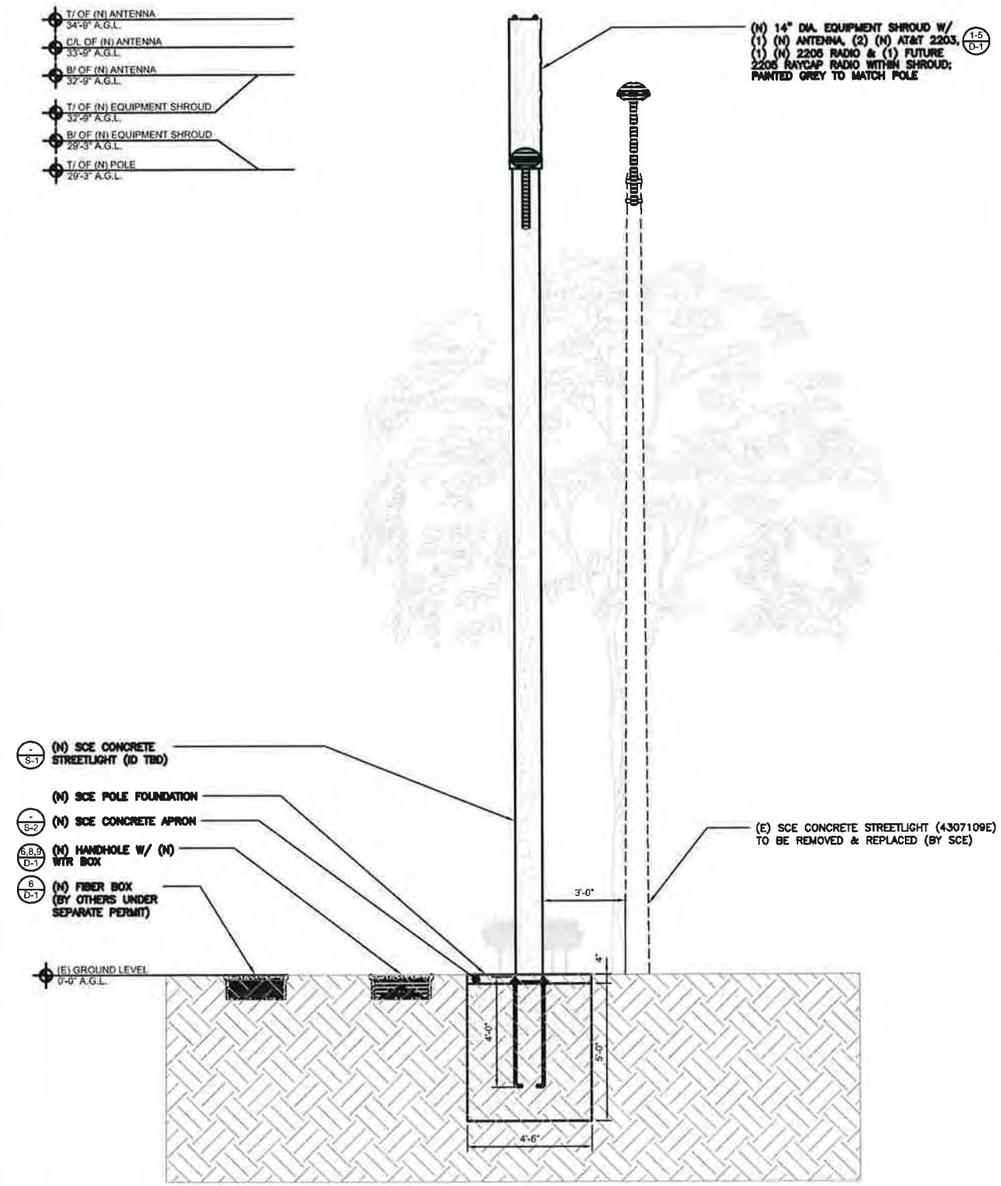

NEW EAST ELEVATION

24"x36" SCALE: 3/8" = 1'-0"
11"x17" SCALE: 3/16" = 1'-0"

0" 1' 2' 4'

1

at&t

ERICSSON
330 COMMERCE, STE. 200
IRVINE, CA 92602

M SQUARED WIRELESS
1367 CALLE AVANZADO
SAN CLEMENTE CA 92673 (949) 391-0024

DRAWN BY:	DGM
CHECKED BY:	MM

REV	DATE	DESCRIPTION
E	02/16/18	100% CONSTRUCTION
D	02/05/18	100% CONSTRUCTION
C	01/15/18	100% CONSTRUCTION
B	12/05/17	95% CONSTRUCTION
A	11/07/17	90% CONSTRUCTION

IT IS A VIOLATION OF LAW FOR ANY PERSON, UNLESS THEY ARE ACTING UNDER THE DIRECTION OF A LICENSED PROFESSIONAL ENGINEER, TO ALTER THIS DOCUMENT.

SITE ID: HBNPB 22A
3333 SUSAN ST
COSTA MESA, CA, 92626

SHEET TITLE
ELEVATIONS

SHEET NUMBER
A-3

PROPOSED SITE LOCATION LOOKING NORTHWEST

1

at&t

ERICSSON

330 COMMERCE, STE. 200
IRVINE, CA 92602

M SQUARED WIRELESS

1387 CALLE AVANZADO
SAN CLEMENTE CA 92673 (949) 361-6634

DRAWN BY:	DGM
CHECKED BY:	MM

REV	DATE	DESCRIPTION
E	02/16/18	100% CONSTRUCTION
D	02/05/18	100% CONSTRUCTION
C	01/15/18	100% CONSTRUCTION
B	12/05/17	95% CONSTRUCTION
A	11/07/17	90% CONSTRUCTION

IT IS A VIOLATION OF LAW FOR ANY PERSON, UNLESS THEY ARE ACTING UNDER THE DIRECTION OF A LICENSED PROFESSIONAL ENGINEER, TO ALTER THIS DOCUMENT.

SITE ID: HBNPB 22A
3333 SUSAN ST
COSTA MESA, CA, 92626

SHEET TITLE

SITE IMAGE

SHEET NUMBER

A-4

AVAILABLE FROM EXCEL SIGN AND DECAL:
http://www.weneedsigns.com/home.php?cal+1135 AND CLICK ON AT&T
PH: 510-651-0445
N01-DC-16 1"X6" NOTICE DECAL
"For 1 Foot Distance" VINYL DECAL WITH ADHEDSIVE BACKING

NOTICE

RF energy emitted by this device may exceed the FCC's general public exposure limits. Stay at least 1 foot away from the device.
Call 800-638-2822 for help if you need access within 1 foot

Place 3 NOTICE sticker at the bottom of the front of the radome of each antenna.

ANTENNA DISCLAIMER LABEL

24"x36" SCALE: NTS
11"x17" SCALE: NTS
7

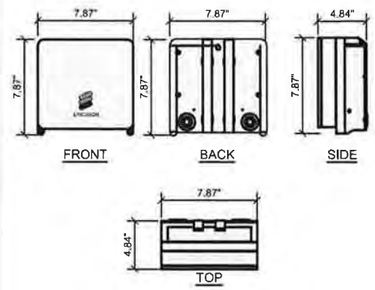

ERICSSON - MICRO RADIO 2205

MECHANICAL SPECIFICATIONS:	
DIMENSIONS (WxDxH):	7.87"x4.84"x7.87", INCLUDING MOUNTING BRACKET AND ESTHETIC FRONT COVER
VOLUME AND WEIGHT:	4 LITRES AND < 4 kg (8.82 lbs)
MOUNTING:	WALL AND POLE MOUNT
INTERFACE SPECIFICATIONS:	
ANTENNA PORTS:	2 x 4 3-10(F)
CPRI:	2 x 2 5/5/10 Gbps (EXCHANGEABLE SFP MODULES)
OPTICAL INDICATORS:	6
EXTERNAL ALARM:	2
FIELD GROUND:	1
ELECTRICAL SPECIFICATIONS:	
POWER SUPPLY:	-48 VCD OR 100 -250 VAC
POWER OUTPUT:	87 WATTS MAX
MAX HEAT DISSIPATION:	90 WATTS
MINIMUM AC FUSE RATING:	6 AMP

MICRO RADIO 2205

24"x36" SCALE: NTS
11"x17" SCALE: NTS
4

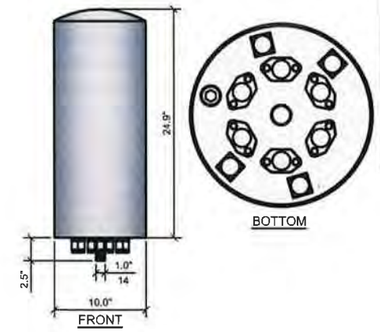

GALTRONICS GQ2410-06621 PSEUDO-OMNI CANISTER ANTENNA

MECHANICAL SPECIFICATIONS:	
DIMENSIONS (HxD):	24.9 x 10 INCHES (643 x 255 mm)
WEIGHT EXCL MOUNTING BRACKETS:	17.2lbs (9 kg)
NO. OF CONNECTORS	10 X 4.3-10 DIN FEMALE
CONNECTOR TYPE & FREQUENCY BAND [MHz]:	4 X 4.3-10 DIN FEMALE (1695-2360) MHz 4 X 4.3-10 DIN FEMALE (3550-3700) MHz 2 X 4.3-10 DIN FEMALE (5150-5950) MHz
MAX WIND SPEED:	150 mph
RADOME MATERIAL:	ASA
SHIPPING DIMS (LxWxD):	30"X19"X19" (762x483x483)mm
GROSS SHIPPING WEIGHT:	26 lbs (12kg)

PART NO. GQ2410-06621-11 (GRAY)
PART NO. GQ2410-06621-611 (BROWN)
PART NO. GQ2410-06621-811 (CHROME)

GALTRONICS P6480-6 OMNI ANTENNA

24"x36" SCALE: NTS
11"x17" SCALE: NTS
1

ELECTROMATE HINGED 3R ENCLOSURE DIMENSIONS:	
A	12"
B	12"
C	6"

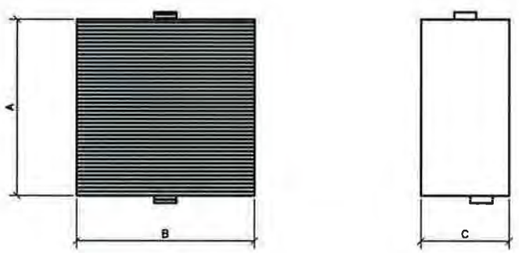

UN-METERED FUSED PANEL

24"x36" SCALE: NTS
11"x17" SCALE: NTS
8

RAYCAP - RSCAC-6533-P-120-D

ELECTRICAL	MECHANICAL	
SURGE PROTECTION DEVICE (SPD) TYPE TO UL: STRIKESORB 30-A NUMBER OF CIRCUITS PROTECTED: 4 SURGE PROTECTIVE DEVICE (SPD) TYPE PER UL 1449 4TH EDITION: TYPE 2 COMPONENT ASSEMBLY SURGE PROTECTION DEVICE (SPD) CLASS TO IEC 61643-11: CLASS II NOMINAL OPERATING VOLTAGE [UN]: 120 V NOMINAL DISCHARGE CURRENT [IN] PER UL 1449 4TH EDITION: 20 KA 8/20 MS MAXIMUM DISCHARGE CURRENT [IMAX] PER IEC 61643-11 60 KA 8/20 MS MAXIMUM CONTINUOUS OPERATING VOLTAGE [UC] [MCOV]: 150V VOLTAGE PROTECTION LEVEL [UP] PER IEC 61643-11: 700V VOLTAGE PROTECTION RATING (VPR): 20 KA 8/20 SUPPRESSION TECHNOLOGY: MOV PROTECTION MODES (DUAL MODE): LINE TO NEUTRAL, NEUTRAL TO GROUND ELPM SERIES MODULES ARE COMPLIANT TO THE FOLLOWING SURGE PROTECTIVE DEVICE (SPD) STANDARDS UL 1449 4TH EDITION, 2011 IEC 61643-11 2011 EN 61643-11 2012, IEEE C62.11-2005, IEEE C62.41-2002, IEEE C62.45 ANSI / NEMA LC1 (ELECTRICAL NEMA VER. 02)	CONNECTION TERMINAL:	COMPRESSION LUG #6 - #14 AWG (13 - 2MM2) TERMINAL BLOCK #10-#26 AWG (6 - 0.14MM2)
	ENVIRONMENTAL INGRESS PROTECTION (IP) RATING:	NEMA 4X
	OPERATION TEMPERATURE:	(°C) -40° C TO +60° C
	STORAGE TEMPERATURE:	(°C) -70° C TO +60° C
	ENCLOSURE TYPE (OUTDOOR) POLYCARBONATE:	UL 94V-0 RATED
	ENCLOSURE DIMENSION:	(L × W × H) 8.58" X 5.06" X 10.08" [217 × 128 × 256 MM]
	WEIGHT:	2.25 LBS [1.02KG]

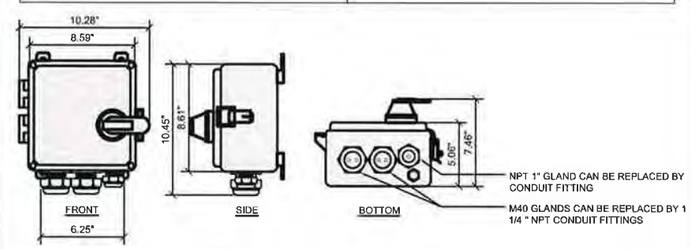

RAYCAP DISCONNECT

24"x36" SCALE: NTS
11"x17" SCALE: NTS
5

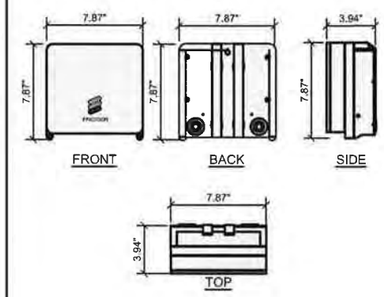

ERICSSON - MICRO RADIO 2203

MECHANICAL SPECIFICATIONS:	
DIMENSIONS (WxDxH):	7.87"x3.94"x7.87", INCLUDING MOUNTING BRACKET AND ESTHETIC FRONT COVER
VOLUME AND WEIGHT:	4 LITRES AND < 4.5 kg (9.92 lbs)
MOUNTING:	WALL AND POLE MOUNT
INTERFACE SPECIFICATIONS:	
ANTENNA PORTS:	2 x 4 3-10(F)
CPRI:	2 x 2 5/5/10 Gbps (EXCHANGEABLE SFP MODULES)
OPTICAL INDICATORS:	6
EXTERNAL ALARM:	2
FIELD GROUND:	1
ELECTRICAL SPECIFICATIONS:	
POWER SUPPLY:	-48 VCD OR 100 -250 VAC
POWER OUTPUT:	87 WATTS MAX
MAX HEAT DISSIPATION:	90 WATTS
MINIMUM AC FUSE RATING:	6 AMP

MICRO RADIO 2203

24"x36" SCALE: NTS
11"x17" SCALE: NTS
2

SQUARE-D HINGED 3R ENCLOSURE # D221NRB DIMENSIONS:	
A	7.75"
B	9.63"
C	3.75"

AT&T MOBILITY FUSED DISCONNECT

24"x36" SCALE: NTS
11"x17" SCALE: NTS
9

COVER FEATURES:
- STANDARD LOAD RATING: 20,800 LBS. WHEEL LOAD ON 10"x20" PLATE
- 2 BOLT DOWN LOCATIONS
- STAINLESS STEEL BOX INSERTS
- POLYMER CONCRETE CONSTRUCTION
- NON-SKID SURFACE STANDARD
- 20K TO BE EMBOSSED ON COVER
- APPROXIMATE WEIGHT = 120 LBS.

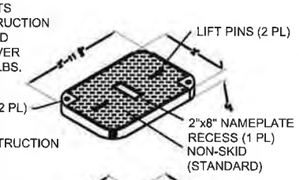

COVER FEATURES:
- POLYMER CONCRETE CONSTRUCTION
- LIGHTWEIGHT
- STACKABLE FOOT
- APPROX. WEIGHT 188 LBS.

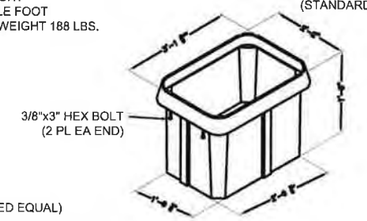

(OR APPROVED EQUAL)

HANDHOLE

24"x36" SCALE: NTS
11"x17" SCALE: NTS
6

CONCEALFAB CONCEALMENT POLE TOP ECCENTRIC

MECHANICAL SPECIFICATIONS:	
DIMENSIONS (WxDxH):	65"x014"
MOUNTING:	MOUNTS TO TOP OF POLE

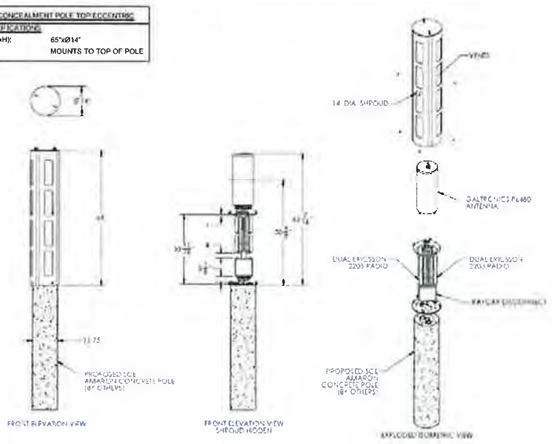

EQUIPMENT SHROUD

24"x36" SCALE: NTS
11"x17" SCALE: NTS
3

at&t

ERICSSON
330 COMMERCE, STE. 200
IRVINE, CA 92602

M SQUARED WIRELESS
1367 CALLE AVANZADO
SAN CLEMENTE CA 92673 (949) 391-6004

DRAWN BY:	DGM
CHECKED BY:	MM

REV	DATE	DESCRIPTION
E	02/16/18	100% CONSTRUCTION
D	02/05/18	100% CONSTRUCTION
C	01/15/18	100% CONSTRUCTION
B	12/05/17	95% CONSTRUCTION
A	11/07/17	90% CONSTRUCTION

IT IS A VIOLATION OF LAW FOR ANY PERSON, UNLESS THEY ARE ACTING UNDER THE DIRECTION OF A LICENSED PROFESSIONAL ENGINEER, TO ALTER THIS DOCUMENT.

SITE ID: HBNPB 22A
3333 SUSAN ST
COSTA MESA, CA, 92626

SHEET TITLE
DETAILS

SHEET NUMBER
D-1

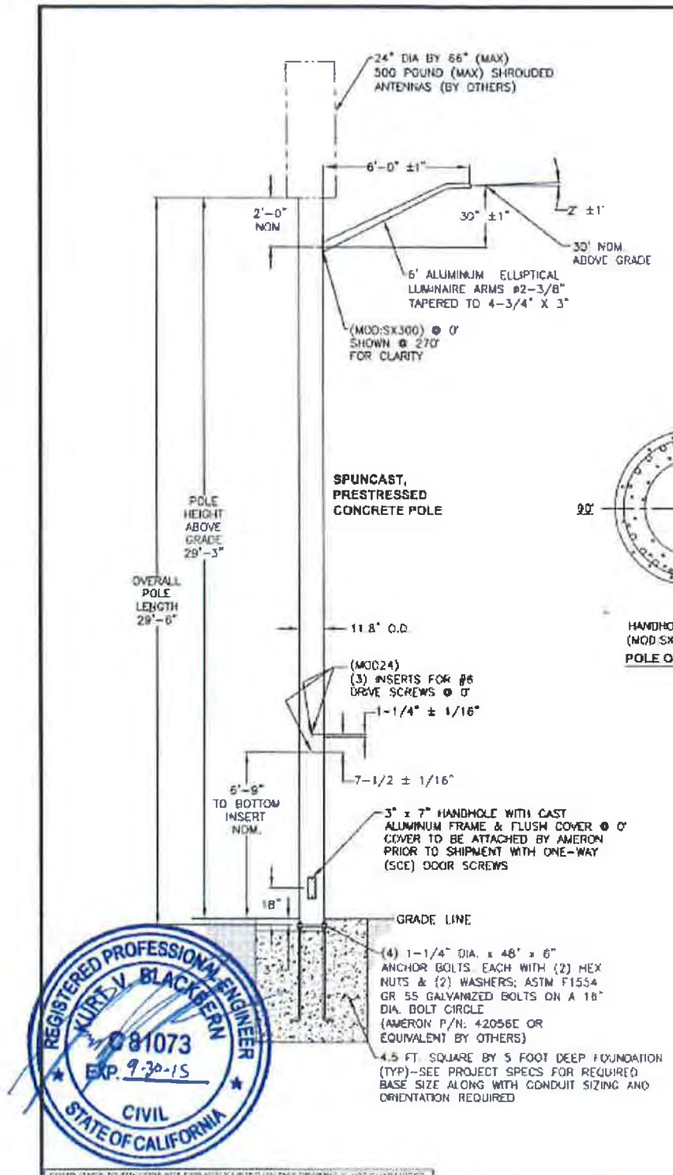

COMPLIANCE TO AIN CODE NOT EXPLICITLY LISTED ON THIS DRAWING IS NOT GUARANTEED. PLEASE CONTACT AMERON ENGINEERING IF YOU HAVE SPECIFIC CODE REQUIREMENTS.

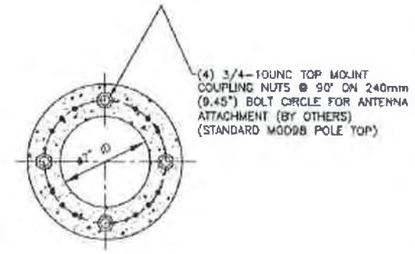

POLE TOP DETAILS

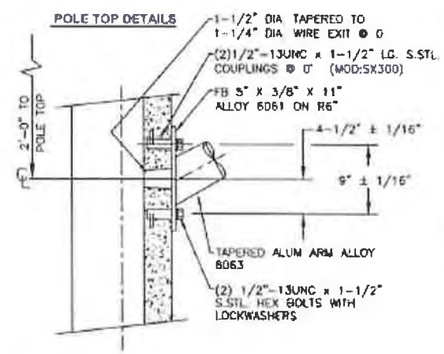

BRACKET ARM TO POLE CONNECTION

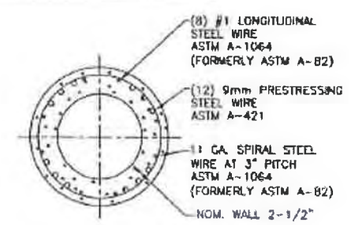

SECTION DETAILS

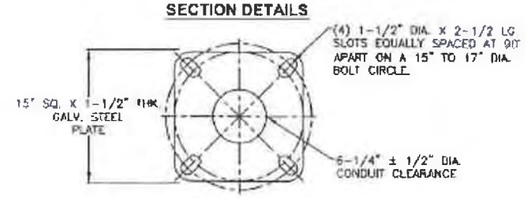

BASE PLATE DETAILS

REV.	DATE	DESCRIPTION	DRN.	APPR.
A	09/07	REDRAWN, ADDED POLE P/N	A.C.	
B	05/08	UPDATED FOR ORACLE	T.L.	
C	02/10	A/B WERE A36M55, NOW A307	J.C.	
D	06/15	UPDATED TO NEW DWG. STDS.	L.P.	

"F" LEVEL CONFIG CODES		
OPTION CLASS	ENTRY	INFO.
COATING	S	
HH COVER	66546E	
DOOR SCRS	SCE	
DRILL IN MOD	MOD24	

"P" LEVEL CONFIG CODES		
OPTION CLASS	ENTRY	INFO.
MIX	B1	
FINISH	S	
BASEPLATE	63250E	
COLLAR	NONE	
POLE TOP CON.	MOD98	
CAST-IN MOD	MODSX300	

300MM NON-TAPERED BASE PLATE ROUND POLE

POLE DESIG-NATION	POLE HEIGHT ABOVE GRADE	OVERALL POLE LENGTH	BOLT CIRCLE	BASE O.D.	ULTIMATE G.L. MOMENT (ft.-lbs.)	POLE WEIGHT (lbs.)
BP300X09	29'-3"	29'-6"	16"	11-13/16"	65,000	2900

( ) POLES REQUIRED (P/N: BP300X09-16137), EACH WITH 6' WALL BRACKET ELLIPTICAL ARM (P/N: LAEB6A)

NOTES:

1. MIX (B15S): SCE BLACK & WHITE, LIGHTLY EXPOSED AGGREGATE FINISH WITH FLAT WATER SEALER COATING.
2. ASTM C-150 TYPE III GRAY CEMENT.
3. f'c @ 28 DAYS=7,000 PSI, USING SPUN CYLINDER TEST.
4. f'c @ 28 DAYS=5,000 PSI, USING ASTM C-31 CYLINDER TEST.
5. POLES MANUFACTURED TO ASTM C-1089-13 SPECIFICATIONS.
6. PROTECTIVE COAT EXPOSED P.C. WIRES AT POLE ENDS.
7. THE POLE DEPICTED ON THIS DRAWING IS DESIGNED TO WITHSTAND THE LOADS IMPARTED BY A SINGLE SIDE MOUNTED TAPERED ELLIPTICAL ALUMINUM ARM (NOT TO EXCEED 6' OFFSET, 3.7 SQ. FT. EPA, 25 LBS.) WITH THE ARM HOLDING A DOWNWARD FACING AREA OR PENDENT LUMINAIRE (NOT TO EXCEED 2.0 SQ. FT EPA, 50 POUNDS); THE POLE ALSO SUPPORTS (1) ANTENNA SHROUD CENTERED 3' ABOVE THE POLE TOP (NOT TO EXCEED 6.3 SQ. FT. EPA, 225 LBS. MAX) AS DESIGNED PER THE 2013 AASHTO LTS-6 (CRITERIA FOR STREET LIGHTING POLES), 2010 CALIFORNIA BUILDING CODE & ASCE7-05 FOR 90 MPH WIND AND SEISMIC ZONE (3-SECOND GUSTS) & SEISMIC CRITERIA Ss=1.75 & S1=0.6. PLEASE CONTACT & ADVISE AMERON ENGINEERING IF THE INTENDED VALUES EXCEED THESE VALUES.
8. DUE TO THE NATURE & CHARACTERISTICS OF CONCRETE, SIDE MOUNT SPACING DIMENSIONS CAN ONLY BE TAKEN TO THE NEAREST 1/8 INCH.

APPROVED BY DATE

SOUTHERN CALIFORNIA EDISON
BP300X09 POLE WITH SINGLE 6' ARM

THIS DOCUMENT CONTAINS INFORMATION WHICH IS PROPRIETARY TO AMERON. IT SHALL NOT BE REPRODUCED, USED OR DISCLOSED TO ANYONE WITHOUT THE PRIOR WRITTEN PERMISSION OF AMERON.

AMERON POLE PRODUCTS

DRAWN: SJB	DATE: 10/2003	
SCALE: N.T.S.	DWG. NO. 040-01277	REV D

at&t

ERICSSON
330 COMMERCE, STE. 200
IRVINE, CA 92602

M SQUARED WIRELESS
1307 CALLE AVANZADO
SAN CLEMENTE CA 92673 (949) 391-0024

DRAWN BY:	DGM
CHECKED BY:	MM

REV	DATE	DESCRIPTION
E	02/16/18	100% CONSTRUCTION
D	02/05/18	100% CONSTRUCTION
C	01/15/18	100% CONSTRUCTION
B	12/05/17	95% CONSTRUCTION
A	11/07/17	90% CONSTRUCTION

IT IS A VIOLATION OF LAW FOR ANY PERSON, UNLESS THEY ARE ACTING UNDER THE DIRECTION OF A LICENSED PROFESSIONAL ENGINEER, TO ALTER THIS DOCUMENT.

SITE ID: HBNPB 22A
3333 SUSAN ST
COSTA MESA, CA, 92626

SHEET TITLE
POLE DETAILS

SHEET NUMBER
S-1

MC 890 Foundation Detail for Fiberglass Nostalgic, Fiberglass, Steel, or Concrete Electroliers

Scope MC 890.1 Electrolier Foundation Detail

Figure MC 890–1: Electrolier Foundation Detail

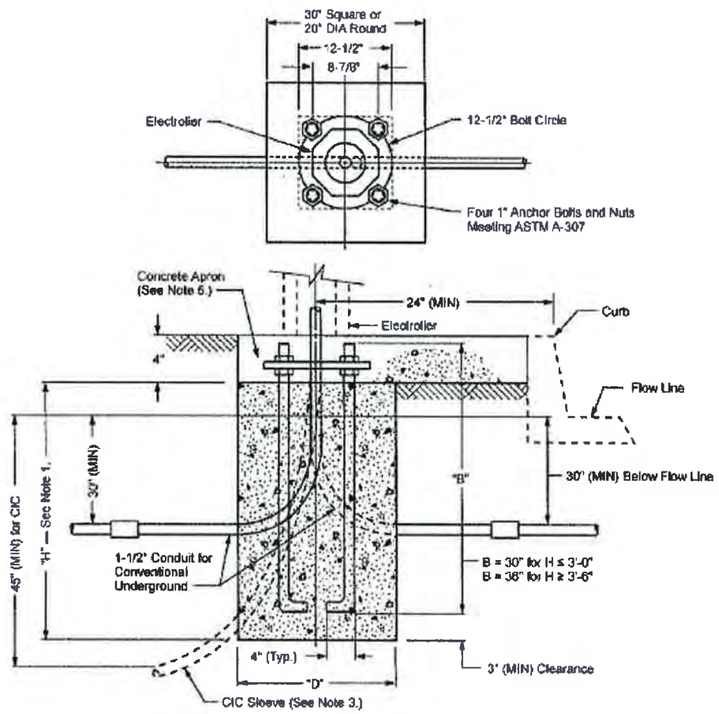

Note(s):

1. The footing depth will vary depending on the type of soil and wind loading requirements. Consult local government agency for requirements. See Table MC 890–1 (Sheet 3) through Table MC 890–4 (Sheet 4).
2. Foundation shall be installed after conduit or CIC (for Underground Service), curbs, and sidewalks are in place and grades are established.
3. 1-1/2" Plastic CIC Sleeve for UG Concrete Electrolier (tape both ends to prevent debris from entering the sleeve).
4. Concrete to reach a minimum compression strength of 2500 psi in 28 days. See UGS 20.3.
5. Place a minimum size concrete apron of 30" x 30" x 4" thick around the pole at the ground level to provide a constrained surface condition when required. Grout to be placed after pole is set and plumbed.

Scope MC 890.3 Electrolier Foundation Requirements

Table MC 890–1: 70 MPH Wind Zone, Constrained Surface Condition

Electrolier Foundation Requirements								
	Soil Type	Fiberglass, Concrete, or Steel				Nostalgic		
		23' Shaft		28' Shaft		All Poles	Fiberglass	Marbelite
	Per UBC[a]	H	D	H	D	H	D	D
I.	Massive Crystalline Bedrock	2'-6"	20" dia.	2'-6"	20" dia.	2'-6"	20" dia	24" dia
		2'-6"	30" x 30"	2'-6"	30" x 30"	2'-6"	30" x 30"	30" x 30"
II.	Sedimentary and Foliated Rock	2'-6"	20" dia.	2'-6"	20" dia.	2'-6"	20" dia.	24" dia.
		2'-6"	30" x 30"	2'-6"	30" x 30"	2'-6"	30" x 30"	30" x 30"
III.	Sandy Gravel, Gravel	3'-0"	20" dia.	3'-0"	20" dia.	3'-0"	20" dia.	24" dia
		2'-6"	30" x 30"	2'-6"	30" x 30"	2'-6"	30" x 30"	30" x 30"
IV.	Sand, Silty Sand, Clayey Sand, Silty Gravel, Clayey Gravel	3'-6"	20" dia.	3'-6"	20" dia.	3'-6"	20" dia.	24" dia.
		2'-6"	30" x 30"	2'-6"	30" x 30"	2'-6"	30" x 30"	30" x 30"
V.	Clay, Sands, Sandy Clay, Silty Clay, Clayey Silt	4'-0"	20" dia.	4'-6"	20" dia.	4'-0"	20" dia.	24" dia.
		2'-6"	30" x 30"	3'-6"	30" x 30"	2'-6"	30" x 30"	30" x 30"

[a] Uniform Building Code — 1991

Note(s):

1. H = Depth of footing
2. D = Diameter of round footing or the side dimension of square footing.

Table MC 890–2: 70 MPH Wind Zone, Non-Constrained Surface Condition

Electrolier Foundation Requirements								
	Soil Type	Fiberglass, Concrete, or Steel				Nostalgic		
		23' Shaft		28' Shaft		All Poles	Fiberglass	Marbelite
	Per UBC[a]	H	D	H	D	H	D	D
I.	Massive Crystalline Bedrock	2'-6'	20" dia.	2'-6"	20" dia.	2'-6"	20" dia.	24" dia.
		2'-6"	30" x 30"	2'-6"	30" x 30"	2'-6"	30" x 30"	30" x 30"
II.	Sedimentary and Foliated Rock	3'-0"	20" dia.	3'-6"	20" dia.	3'-0"	20" dia.	24" dia.
		2'-6"	30" x 30"	2'-6"	30" x 30"	2'-6"	30" x 30"	30" x 30"
III.	Sandy Gravel, Gravel	3'-6"	20" dia.	4'-0"	20" dia.	3'-6"	20" dia.	24" dia
		3'-0"	30" x 30"	3'-0"	30" x 30"	3'-0"	30" x 30"	30" x 30"
IV.	Sand, Silty Sand, Clayey Sand, Silty Gravel, Clayey Gravel	4'-0"	20" dia.	4'-6"	20" dia.	4'-0"	20" dia.	24" dia.
		3'-0"	30" x 30"	3'-6"	30" x 30"	3'-0"	30" x 30"	30" x 30"
V.	Clay, Sands, Sandy Clay, Silty Clay, Clayey Silt	4'-6"	20" dia.	5'-0"	20" dia.	4'-6"	20" dia.	24" dia.
		3'-6"	30" x 30"	4'-0"	30" x 30"	3'-6"	30" x 30"	30" x 30'

[a] Uniform Building Code — 1991

Note(s):

1. H = Depth of footing
2. D = Diameter of round footing or the side dimension of square footing

at&t

ERICSSON
330 COMMERCE, STE. 200
IRVINE, CA 92602

M SQUARED WIRELESS
1367 CALLE AVANZADO
SAN CLEMENTE CA 92673 (949) 201-6024

DRAWN BY: DGM
CHECKED BY: MM

REV	DATE	DESCRIPTION
E	02/16/18	100% CONSTRUCTION
D	02/05/18	100% CONSTRUCTION
C	01/15/18	100% CONSTRUCTION
B	12/05/17	95% CONSTRUCTION
A	11/07/17	90% CONSTRUCTION

IT IS A VIOLATION OF LAW FOR ANY PERSON, UNLESS THEY ARE ACTING UNDER THE DIRECTION OF A LICENSED PROFESSIONAL ENGINEER, TO ALTER THIS DOCUMENT.

SITE ID: HBNPB 22A
3333 SUSAN ST
COSTA MESA, CA, 92626

SHEET TITLE
POLE FOUNDATION DETAILS

SHEET NUMBER
S-2

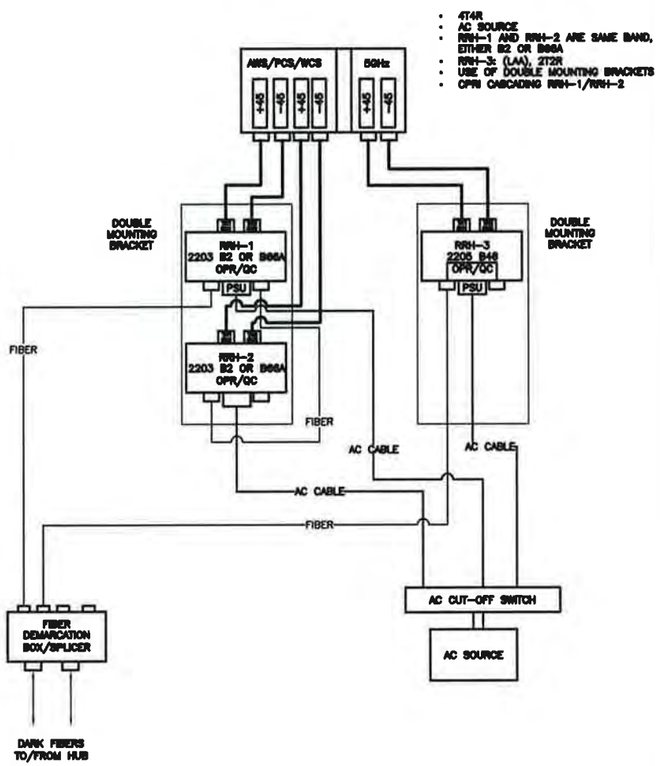

PICO PLUMBING DIAGRAM 24"x36" SCALE: NTS 11"x17" SCALE: NTS 6

NOTE:
ALL GROUND CONDUCTORS TO BE #6 THHN/THWN GREEN STRANDED COPPER UNLESS OTHERWISE NOTED OR REQUIRED BY EQUIPMENT MANUFACTURER.

EXOTHERMIC WELD CONNECTIONS ■
MECHANICAL TYPE CONNECTIONS ●
GROUNDING BAR

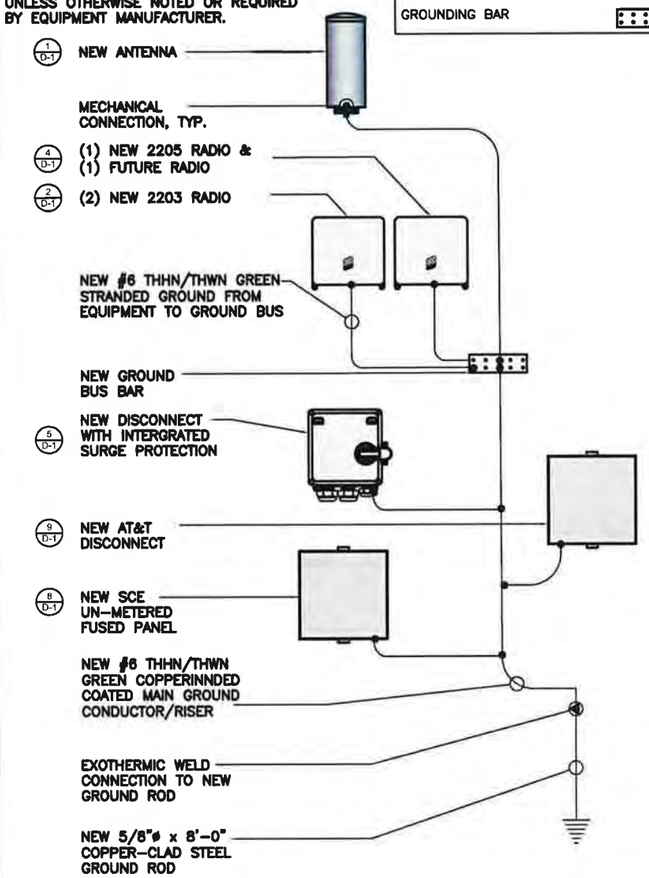

GROUNDING SCHEMATIC 24"x36" SCALE: NTS 11"x17" SCALE: NTS 3

NOTE:
UTILITY DESIGN AND RUNS ARE PRELIMINARY. PENDING FINAL DESIGN FROM UTILITY PROVIDERS

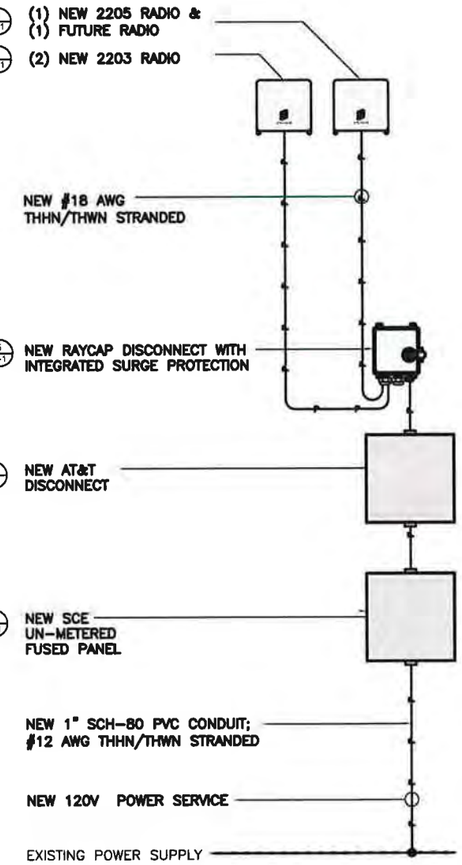

SINGLE LINE DIAGRAM 24"x36" SCALE: NTS 11"x17" SCALE: NTS 1

NOT USED 24"x36" SCALE: NTS 11"x17" SCALE: NTS 7

NOT USED 24"x36" SCALE: NTS 11"x17" SCALE: NTS 4

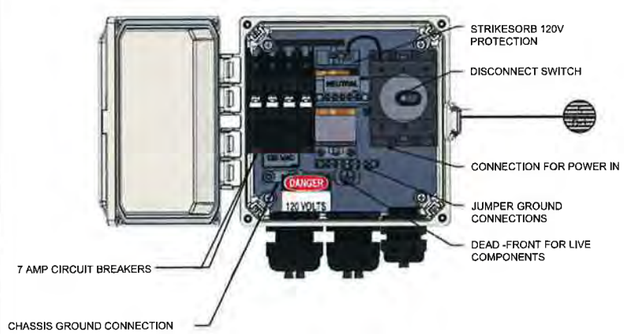

BREAKER SCHEDULE 24"x36" SCALE: NTS 11"x17" SCALE: NTS 2

at&t

ERICSSON
330 COMMERCE, STE. 200
IRVINE, CA 92602

M SQUARED WIRELESS
1367 CALLE AVANZADO
SAN CLEMENTE CA 92673 (949) 581-6624

DRAWN BY: DGM
CHECKED BY: MM

REV	DATE	DESCRIPTION
E	02/16/18	100% CONSTRUCTION
D	02/05/18	100% CONSTRUCTION
C	01/15/18	100% CONSTRUCTION
B	12/05/17	95% CONSTRUCTION
A	11/07/17	90% CONSTRUCTION

IT IS A VIOLATION OF LAW FOR ANY PERSON, UNLESS THEY ARE ACTING UNDER THE DIRECTION OF A LICENSED PROFESSIONAL ENGINEER, TO ALTER THIS DOCUMENT.

SITE ID: HBNPB 22A
3333 SUSAN ST
COSTA MESA, CA, 92626

SHEET TITLE
ELECTRICAL DETAILS

SHEET NUMBER
E-1

ATTACHMENT 3

AT&T Mobility
Small Cell Project
Site Name: CRAN_RLOS_HBNPB_027

Background

AT&T Mobility (AT&T) mission is to connect people with their world everywhere they live, work and play. AT&T delivers advance mobile services, high speed internet and smart solutions for people and business. AT&T is the global leader in Technology, Media and Telecommunications industry and is committed to the development, growth and improvement of communications in the United States. AT&T is a nationwide wireless service provider located throughout the United States and in U.S. territories. Millions of wireless connections take advantage of the company's mobile products and services. AT&T is committed to improve the customer experience of their hand-held devices, portable computing, and connected automobiles. The company's commitment is to have a robust network of cell sites that could bring faster data speeds and voice connectivity.

AT&T Mobility is a Telephone Corporation registered with the California Public Utilities Commission. The CPUC registration number is U 3060 C. As a Telephone Corporation, AT&T has a legal right to access public right of way under Section 7901 of the California Public Utilities Code.

Mobile Wireless Services

Traditional macro sites are the fundamental building blocks needed for the provision of wireless voice services and high-speed mobile internet. AT&T uses high-band and low-band spectrum to provide wireless service. Each spectrum band has different propagation characteristics, which may experience varied noise or signal interference at a given location. To increase the service quality and reduce noise and interference to the customer, AT&T uses multiple layers of its licensed spectrum to bring its facilities closer to the end user. Signal interference created by environmental clutter or noise from surrounding sources, degrades the signal quality in a manner that affects data rates, service quality, and ultimately coverage. Placing facilities closer to the end user creates smaller coverage cells that produce faster data rates and produces a more efficient use of the limited spectrum.

Adding macro sites has been the typical design solution to increase coverage, capacity and to off-load existing cell sites in the network. This design alternative consists of multiple antennas mounted to a large support structure and a base station of several radio cabinets. The topography of a given area, dense concentration of buildings, the lack of available real estate, the high construction costs and other environmental factors has made it more difficult to bring wireless services closer to the end user in order to reduce weak signals and noise interference, and to increase the data rates which support existing and future demands for optimal user experience of mobile devices.

AT&T solution to increase the densification of wireless signals and coverage capacity of its network in any given geographical area is the implementation of small cells within the public rights-of-way. Small cells are lightweight and low power antenna solutions designed to cover a radius of up to 1,500 feet. The typical configuration is a single omni directional antenna or a set of small antennas mounted to existing right-of-way infrastructure, including utility poles, replacement streetlights or other infrastructure. Remote radios are also used with the omni-directional antenna to connect the small cell to nearby macro locations or head-end stations via fiber connections. Small cell installations are non-intrusive to the local community and can easily blend-in with the natural urban or suburban landscape.

Project Description

AT&T engineers have identified several locations in Costa Mesa that require stronger signal densification in order to increase throughput rates and to meet the existing and future demands. These locations are shown on the enclosed Small Cell Network map, The map includes approximate coverage for each location shown in red circles and the special relationship from each other. Additional areas may be identified in the future as the engineers continue to monitor the network service quality and capacity.

The subject project is located at the intersection of El Camino Dive and Mendoza Drive. AT&T proposes to install a 10-inch diameter omni-directional antenna and a 12-inch diameter shroud for the radios to be installed on a replaced SCE streetlight. The design is a complete antenna and radio concealment that will be compatible with the overall diameter of the replaced streetlight. The new installation will be painted gray to match the final aggregate light pole. The proposed installation is small in scale and will blend with the existing street landscape.

The project scope will consist of the following:

- Removal and replacement of a streetlight by SCE.
- Installation of a single omni-directional antenna.
- Installation of four remote radio units and raycap disconnect switch within a shroud.
- Installation of power and fiber handholds.

Plans depicting the project location, design, height and style with the new wireless antenna installation are enclosed. Photographic simulations showing the final antenna installation are also enclosed.

Construction and Maintenance

Construction of the proposed project will take approximately 30-days. All construction will be done in a manner that minimizes impact to residents and business in the area. Existing underground or overhead power and fiber connections will be used with minimal trenching. Directional boring will be used when deemed appropriate for each specific location.

Maintenance of the subject facility is minimal. The majority of the monitoring is done from AT&T's switching offices. If needed, a site visit to change any radio equipment will be coordinated with the existing utility providers and city.

Project Code Compliance

The subject project complies with the City of Costa Mesa Telecommunication Regulatory Ordinance in the Public Right-of-Way, Section 19-15 in the following ways:

1. The proposed wireless facility is a small cell installation to be placed on a replaced SCE streetlight in the public right-of-way.
2. The proposed facility is small in scale and is visually compatible with the surrounding development.
3. The project is allowed subject to the city's approval of a Minor Conditional Use Permit.
4. The proposed installation will not interfere with the use of the existing right-of-way. No ground mounted equipment is being proposed.
5. The proposed facility is a low powered antenna designed to work in conjunction with other small cell sites in the area and to off-load capacity from an existing macro facility. The installation will comply with applicable regulations of the Federal Communications Commission as demonstrated on the enclosed FCC Local Official Guide to RF – Appendix A.
6. As stated in the project description, the purpose for the deployment of small cells is to increase the signal quality and capacity to the identified area near the site. As such, implementation of the small cell project will reduce a data signal gap that currently existing at this location.
7. The applicant will conform to all City of Costa Mesa requirements.

EDISON
CARRIER SOLUTIONS℠
A Division of SOUTHERN CALIFORNIA EDISON℠

Brian P. Ryan
Principle Manager
Telephone: 909-274-1949
Brian.Ryan@sce.com

March 1, 2018

To Whom It May Concern:

Since 1994, Southern California Edison (SCE) has assisted wireless service providers in expanding their networks to meet customers' needs for telecommunications service. SCE makes available existing structures that can be used to co-locate the wireless service providers' equipment, while lessening the visual impacts on the community and constituency that is served. This letter requests that you help us in this endeavor.

In an effort to minimize the potential clutter that new vertical structures would produce, many California jurisdictions have adopted ordinances and policies encouraging wireless facilities to be mounted on street light poles within the public rights of way.

As you are aware, SCE owns and maintains street light poles in your jurisdiction pursuant to our LS-1 tariff. In order to accommodate the increasing demand for micro-cell site locations, SCE has agreed to allow wireless service providers to attach their antennas to some of these streetlight poles, and contractually requires the wireless service provider to comply with certain requirements, including a requirement that the facility will not impact SCE's ability to provide street lighting service.

Costa Mesa has and retains full control over the entitlement and permitting process for these and future sites. The wireless service providers also pay for electrical usage resulting from their sites. This electrical service is metered and billed separately, and the Jurisdiction is not impacted.

While SCE believes this approach benefits local governments as well as their constituency, we would not engage in this solution if doing so resulted in extra costs to SCE or Costa Mesa. We would therefore appreciate confirmation that Costa Mesa consents to use of its public rights of way for the purpose of licensing space on an SCE Streetlight Pole # **4788729E** located at: **1055 El Camino Dr**. **AT&T** Site number:
SCL HBNPB 027
PTN# 3551A0DQGL
FA# 14345606.

Please sign this letter to indicate your consent and return it to me at the below address. If you have any questions, please feel free to call Alexandra Martin (714) 323-5951.

Regards,

Brian P. Ryan

Signature _____

Name _____

Title _____

Date: _____

SCE Edison Carrier Solutions
2 Innovation Way 1st Floor
Pomona, CA 91768

EDISON
CARRIER SOLUTIONS℠
A Division of SOUTHERN CALIFORNIA EDISON℠

Brian Ryan
Principal Manager Telecom Sales
Edison Carrier Solutions
e-mail: Brian.Ryan@sce.com

March 1, 2018

Costa Mesa Planning / Permitting Department

To Whom It May Concern:

Re: Letter of Authorization

SCE streetlight identified as – SCE Streetlight Pole # **4788729E** located adjacent: **1055 El Camino Dr**. **AT&T** Site Name: **SCL HBNPB 027**
PTN# 3551A0DQGL
FA# 14345606.

Southern California Edison Company (SCE) is the owner of the Light Pole, located in Costa Mesa, CA. AT&T "Carrier" has requested that SCE replace the existing Light Pole so that it can be used for operating a wireless communications facility, ("Site").

SCE has reviewed Carrier's preliminary plans for this Site and believe these plans are compatible with SCE's use of this Light Pole. Thus, as a representative of SCE, I hereby authorize Carrier, and its representatives, to seek and secure all right(s), including any environmental review associated with granting such rights, that are needed from the Jurisdiction to use the Light Pole and other property for this purpose as long as there are no costs to SCE.

Notwithstanding this authorization, SCE reserves the right to reject Carrier's request for use of its Light Pole for any reason, including imposed conditions or required changes to the light pole by the Jurisdiction, are unacceptable to SCE.

All correspondence and/or notices regarding use of SCE's Light Pole by Carrier, or any later requests by the Carrier for authorizations or approvals needed for construction, operation or maintenance of an approved Site, should include a copy to SCE.

If you have any questions concerning this project, please contact Alexandra Martin 714-323-5951.

Sincerely,

Brian P. Ryan

2 Innovation Way, 1st Floor
Pomona, CA 91768

PLEASE TRANSFER LETTER TO CITY LETTERHEAD

Date

Brian Ryan
Southern California Edison
Carrier Solutions Division
2 Innovation Way 1st Floor
Pomona, Ca 91768

Dear Mr. Ryan:

This letter authorizes Southern California Edison (SCE) to disconnect the SCE streetlight identified as – SCE Streetlight Pole **#4788729E** located adjacent: **1055 El Camino Dr. AT&T** Site number: **SCL HBNPB 027**
PTN# 3551A0DQGL
FA# 14345606 so that work can be performed to replace the existing Streetlight.

AT&T (Wireless Carrier) has requested that SCE replace the Southern California Edison streetlight with a new streetlight that will be used for operating the wireless communications facility identified as SCE Light Pole **#4788729E** located adjacent: 1055 El Camino Dr. **AT&T** Site number: **SCL HBNPB 027**
PTN# 3551A0DQGL
FA# 14345606.

Please coordinate the disconnecting of the streetlight directly with Costa Mesa, (please provide County Contact Name, Phone) so that the light will be out only for the above referenced work to be completed.

If you have any questions, please do not hesitate to call me.

Sincerely,

Name
Public Agency

SOUTHERN CALIFORNIA EDISON STREETLIGHT AUTHORIZATION

DEVELOPER/APPLICANT MUST PROVIDE THIS FORM
COMPLETED BY THE PUBLIC AUTHORITY
FOR ANY SCE-OWNED STREETLIGHT INSTALLATION, REMOVAL OR CHANGE REQUESTS
Incomplete forms will be returned and not processed

PUBLIC AUTHORITY NAME: City of Costa Mesa

Builder/Developer Name: AT&T / Ericsson **Phone #:** (281) 995-3829

Tract/Ref # leave blank **Streetlight Location** Pole #4788729E, 1055 El Camino Drive, HBNPB_27A

Please Check one: ☐ **Installation** ☐ **Removal** ☑ **Change**

Number of Lamp(s)	Lamp Size	Lamp Type
1	70 watts	Sodium Vapor

New Installations
Public Authority Responsibility for Streetlight Monthly Billing
Please Check one and fill out applicable dates:

____**Upon Energizing**
☐ **If Public Authority is collecting Builder/Developer Advanced Energy Payment, indicate date collected. (_____)**

Monthly Billing: ____Establish new Service Account (SA) Use existing SA #_____

____ **Commitment Date-**
Date Agreed upon by SCE and Public Authority (_____) or no later than 36 months from first streetlight energized whichever is earlier.

Monthly Billing: ____Establish new Service Account (SA) Use existing SA #_____

x **Public Authority is not responsible**
____**HOA Area Name_____ Other Entity (please define)** AT&T

Public Authority Notes:
Please notify Mohcine Chirar at (714) 754-5140 when scheduling disconnect of existing streetlight.

0 day outage requested; City of Costa Mesa retains responsibility for LS-1 lighting electrical payment; AT&Tcovers costs of pole replacement

Authorized Public Authority Agent

_____ _____ _____
Print name **Date** **Signature**

Phone #_____ _____
Title

TO BE COMPLETED BY SCE
ACTION: ENTER TRACT/REF# ON DM PROGRAM NAME FIELD.

District _____ **Planning AOR**_____ _____
PLANNER NAME (PRINT)

DM SR # _____ **Product #**_____ **(one per SLA)**

FORWARD COMPLETED COPIES OF THE SLA FORM, MAP AND CSD272 CONTRACT, IF APPLICABLE TO:
"Street & Outdoor Lighting Organization" Santa Ana Bldg. D

Radio Frequency – Electromagnetic Energy (RF-EME) Compliance Report

Analysis Completed For:
Site No. CRAN_RLOS_HBNPB_020
MRLOS045170
HBNPB 20B
3590 Harbor Gateway North
Costa Mesa, California 92626
Orange County
33.701857; -117.923339 NAD83
Utility Pole

Note that these results can also be applied to other Costa Mesa locations using the same antenna and power configurations with a greater than or equal to antenna radiation center.

The proposed AT&T installation will be in compliance with FCC regulations upon proper installation of recommended signage.

EBI Project No. 6218004289
June 19, 2018

Prepared for:

AT&T Mobility, LLC
100 West Alondra Boulevard
Gardena, California 90248

Prepared by:

EBI Consulting
environmental | engineering | due diligence

TABLE OF CONTENTS

EXECUTIVE SUMMARY 1
1.0 FEDERAL COMMUNICATIONS COMMISSION (FCC) REQUIREMENTS 3
2.0 AT&T RF EXPOSURE POLICY REQUIREMENTS 5
3.0 WORST-CASE PREDICTIVE MODELING 6
4.0 RECOMMENDED SIGNAGE/COMPLIANCE PLAN 7
5.0 SUMMARY AND CONCLUSIONS 8
6.0 LIMITATIONS 8

APPENDICES

Appendix A Personnel Certifications
Appendix B Compliance/Signage Plan

EXECUTIVE SUMMARY

Purpose of Report

EnviroBusiness Inc. (dba EBI Consulting) has been contracted by AT&T Mobility, LLC to conduct radio frequency electromagnetic (RF-EME) modeling for AT&T Site CRAN_RLOS_HBNPB_020 located at 3590 Harbor Gateway North in Costa Mesa, California to determine RF-EME exposure levels from proposed AT&T wireless communications equipment at this site. As described in greater detail in Section 1.0 of this report, the Federal Communications Commission (FCC) has developed Maximum Permissible Exposure (MPE) Limits for general public exposures and occupational exposures. This report summarizes the results of RF-EME modeling in relation to relevant FCC RF-EME compliance standards for limiting human exposure to RF-EME fields.

This report contains a detailed summary of the RF EME analysis for the site, including the following:

- Site Plan with antenna locations
- Graphical representation of theoretical MPE fields based on modeling
- Graphical representation of recommended signage and/or barriers

This document addresses the compliance of AT&T's transmitting facilities independently and in relation to all collocated facilities at the site.

Statement of Compliance

A site is considered out of compliance with FCC regulations if there are areas that exceed the FCC exposure limits <u>and</u> there are no RF hazard mitigation measures in place. Any carrier which has an installation that contributes more than 5% of the applicable MPE must participate in mitigating these RF hazards.

As presented in the sections below, based on worst-case predictive modeling, there are no modeled exposures on any accessible utility line level and ground walking/working surface related to ATT's proposed antennas that exceed the FCC's occupational and/or general public exposure limits at this site.

As such, the proposed AT&T installation is in compliance with FCC regulations upon proper installation of recommended signage and/or barriers.

AT&T Recommended Signage/Compliance Plan

AT&T's RF Exposure: Responsibilities, Procedures & Guidelines document, dated October 28, 2014, requires that:

1. All sites must be analyzed for RF exposure compliance;
2. All sites must have that analysis documented; and
3. All sites must have any necessary signage and barriers installed.

Site compliance recommendations have been developed based upon protocols presented in AT&T's RF Exposure: Responsibilities, Procedures & Guidelines document, dated October 28, 2014, additional guidance provided by AT&T, EBI's understanding of FCC and OSHA requirements, and common industry practice. Barrier locations have been identified (when required) based on guidance presented in AT&T's RF Exposure: Responsibilities, Procedures & Guidelines document, dated October 28, 2014.

The following signage is recommended at this site:

- Blue NOTICE decals posted around the bottom of the radome of the antenna.

The signage proposed for installation at this site complies with AT&T's RF Exposure: Responsibilities, Procedures & Guidelines document and therefore complies with FCC and OSHA requirements. Barriers are not recommended on this site. More detailed information concerning site compliance recommendations is presented in Section 4.0 and Appendix B of this report.

1.0 FEDERAL COMMUNICATIONS COMMISSION (FCC) REQUIREMENTS

The FCC has established Maximum Permissible Exposure (MPE) limits for human exposure to Radiofrequency Electromagnetic (RF-EME) energy fields, based on exposure limits recommended by the National Council on Radiation Protection and Measurements (NCRP) and, over a wide range of frequencies, the exposure limits developed by the Institute of Electrical and Electronics Engineers, Inc. (IEEE) and adopted by the American National Standards Institute (ANSI) to replace the 1982 ANSI guidelines. Limits for localized absorption are based on recommendations of both ANSI/IEEE and NCRP.

The FCC guidelines incorporate two separate tiers of exposure limits that are based upon occupational/controlled exposure limits (for workers) and general public/uncontrolled exposure limits for members of the general public.

Occupational/controlled exposure limits apply to situations in which persons are exposed as a consequence of their employment and in which those persons who are exposed have been made fully aware of the potential for exposure and can exercise control over their exposure. Occupational/ controlled exposure limits also apply where exposure is of a transient nature as a result of incidental passage through a location where exposure levels may be above general public/uncontrolled limits (see below), as long as the exposed person has been made fully aware of the potential for exposure and can exercise control over his or her exposure by leaving the area or by some other appropriate means.

General public/uncontrolled exposure limits apply to situations in which the general public may be exposed or in which persons who are exposed as a consequence of their employment may not be made fully aware of the potential for exposure or cannot exercise control over their exposure. Therefore, members of the general public would always be considered under this category when exposure is not employment-related, for example, in the case of a telecommunications tower that exposes persons in a nearby residential area.

Table 1 and Figure 1 (below), which are included within the FCC's OET Bulletin 65, summarize the MPE limits for RF emissions. These limits are designed to provide a substantial margin of safety. They vary by frequency to take into account the different types of equipment that may be in operation at a particular facility and are "time-averaged" limits to reflect different durations resulting from controlled and uncontrolled exposures.

The FCC's MPEs are measured in terms of power (mW) over a unit surface area (cm^2). Known as the power density, the FCC has established an occupational MPE of 5 milliwatts per square centimeter (mW/cm^2) and an uncontrolled MPE of 1 mW/cm2 for equipment operating in the 1900 MHz frequency range. For the AT&T equipment operating at 850 MHz, the FCC's occupational MPE is 2.83 mW/cm^2 and an uncontrolled MPE of 0.57 mW/cm^2. For the AT&T equipment operating at 700 MHz, the FCC's occupational MPE is 2.33 mW/cm^2 and an uncontrolled MPE of 0.47 mW/cm^2. These limits are considered protective of these populations.

Table 1: Limits for Maximum Permissible Exposure (MPE)

(A) Limits for Occupational/Controlled Exposure

Frequency Range (MHz)	Electric Field Strength (E) (V/m)	Magnetic Field Strength (H) (A/m)	Power Density (S) (mW/cm^2)	Averaging Time $[E]^2$, $[H]^2$, or S (minutes)
0.3-3.0	614	1.63	(100)*	6
3.0-30	1842/f	4.89/f	($900/f^2$)*	6
30-300	61.4	0.163	1.0	6
300-1,500	--	--	f/300	6

Table 1: Limits for Maximum Permissible Exposure (MPE)				
(A) Limits for Occupational/Controlled Exposure				
Frequency Range (MHz)	**Electric Field Strength (E) (V/m)**	**Magnetic Field Strength (H) (A/m)**	**Power Density (S) (mW/cm^2)**	**Averaging Time $[E]^2$, $[H]^2$, or S (minutes)**
1,500-100,000	--	--	5	6
(B) Limits for General Public/Uncontrolled Exposure				
Frequency Range (MHz)	**Electric Field Strength (E) (V/m)**	**Magnetic Field Strength (H) (A/m)**	**Power Density (S) (mW/cm^2)**	**Averaging Time $[E]^2$, $[H]^2$, or S (minutes)**
0.3-1.34	614	1.63	(100)*	30
1.34-30	824/f	2.19/f	($180/f^2$)*	30
30-300	27.5	0.073	0.2	30
300-1,500	--	--	f/1,500	30
1,500-100,000	--	--	1.0	30

f = Frequency in (MHz)
* Plane-wave equivalent power density

Figure 1. FCC Limits for Maximum Permissible Exposure (MPE)
Plane-wave Equivalent Power Density

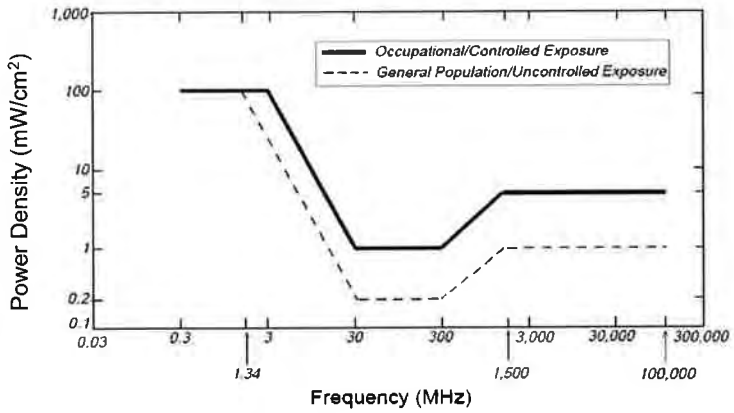

Based on the above, the most restrictive thresholds for exposures of unlimited duration to RF energy for several personal wireless services are summarized below:

Personal Wireless Service	Approximate Frequency	Occupational MPE	Public MPE
Personal Communication (PCS)	1,950 MHz	5.00 mW/cm^2	1.00 mW/cm^2
Cellular Telephone	870 MHz	2.90 mW/cm^2	0.58 mW/cm^2
Specialized Mobile Radio	855 MHz	2.85 mW/cm^2	0.57 mW/cm^2
Long Term Evolution (LTE)	700 MHz	2.33 mW/cm^2	0.47 mW/cm^2
Most Restrictive Freq. Range	30-300 MHz	1.00 mW/cm^2	0.20 mW/cm^2

MPE limits are designed to provide a substantial margin of safety. These limits apply for continuous exposures and are intended to provide a prudent margin of safety for all persons, regardless of age, gender, size, or health.

Personal Communication (PCS) facilities used by AT&T in this area operate within a frequency range of 700-1900 MHz. Facilities typically consist of: 1) electronic transceivers (the radios or cabinets) connected to wired telephone lines; and 2) antennas that send the wireless signals created by the transceivers to be received by individual subscriber units (PCS telephones). Transceivers are typically connected to antennas by coaxial cables.

Because of the short wavelength of PCS services, the antennas require line-of-site paths for good propagation, and are typically installed above ground level. Antennas are constructed to concentrate energy towards the horizon, with as little energy as possible scattered towards the ground or the sky. This design, combined with the low power of PCS facilities, generally results in no possibility for exposure to approach Maximum Permissible Exposure (MPE) levels, with the exception of areas directly in front of the antennas.

2.0 AT&T RF Exposure Policy Requirements

AT&T's RF Exposure: Responsibilities, Procedures & Guidelines document, dated October 28, 2014, requires that:

1. All sites must be analyzed for RF exposure compliance;
2. All sites must have that analysis documented; and
3. All sites must have any necessary signage and barriers installed.

Pursuant to this guidance, worst-case predictive modeling was performed for the site. This modeling is described below in Section 3.0. Lastly, based on the modeling and survey data, EBI has produced a Compliance Plan for this site that outlines the recommended signage and barriers. The recommended Compliance Plan for this site is described in Section 4.0.

3.0 WORST-CASE PREDICTIVE MODELING

In accordance with AT&T's RF Exposure policy, EBI performed theoretical modeling using RoofView® software to estimate the worst-case power density at the site utility line level and ground-level resulting from operation of the antennas. RoofView® is a widely-used predictive modeling program that has been developed by Richard Tell Associates to predict both near field and far field RF power density values for roof-top and tower telecommunications sites produced by vertical collinear antennas that are typically used in the cellular, PCS, paging and other communications services. The models utilize several operational specifications for different types of antennas to produce a plot of spatially-averaged power densities that can be expressed as a percentage of the applicable exposure limit.

For this report, EBI utilized antenna and power data provided by AT&T, and compared the resultant worst-case MPE levels to the FCC's occupational/controlled exposure limits outlined in OET Bulletin 65. For this report, EBI utilized antenna and power data provided by AT&T and compared the resultant worst-case MPE levels to the FCC's occupational/controlled exposure limits outlined in OET Bulletin 65. The assumptions used in the modeling are based upon information provided by AT&T and information gathered from other sources. There are no other wireless carriers with equipment installed at this site.

Based on worst-case predictive modeling, there are no modeled exposures on any accessible utility line level and ground walking/working surface related to ATT's proposed antennas that exceed the FCC's occupational and/or general public exposure limits at this site.

At the nearest walking/working surfaces to the AT&T antenna, the maximum power density generated by the AT&T antenna is approximately 57.10 percent of the FCC's general public limit (11.42 percent of the FCC's occupational limit). The composite exposure level from all carriers on this site is approximately 57.10 percent of the FCC's general public limit (11.42 percent of the FCC's occupational limit) at the nearest walking/working surface to each antenna. Based on worst-case predictive modeling, there are no areas at ground level related to the proposed AT&T antenna that exceed the FCC's occupational or general public exposure limits at this site. At ground level, the maximum power density generated by the antenna is approximately 1.00 percent of the FCC's general public limit (0.20 percent of the FCC's occupational limit).

A graphical representation of the RoofView® modeling results is presented in Appendix B. It should be noted that RoofView® is not suitable for modeling microwave dish antennas; however, these units are designed for point-to-point operations at the elevations of the installed equipment rather than ground-level coverage. Based on AT&T's RF Exposure: Responsibilities, Procedures & Guidelines document, dated October 28, 2014, microwave antennas are considered compliant if they are higher than 20 feet above any accessible walking/working surface. There are no microwaves installed at this site.

4.0 RECOMMENDED SIGNAGE/COMPLIANCE PLAN

Signs are the primary means for control of access to areas where RF exposure levels may potentially exceed the MPE. As presented in the AT&T guidance document, the signs must:

- Be posted at a conspicuous point;
- Be posted at the appropriate locations;
- Be readily visible; and
- Make the reader aware of the potential risks prior to entering the affected area.

The table below presents the signs that may be used for AT&T installations.

Informational Signs		Alerting Signs	
	INFO 1	NOTICE 1	NOTICE 2
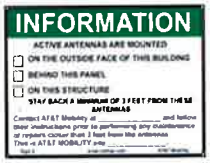	INFO 2	NOTICE DECAL	
	INFO 3	CAUTION 1 – ROOFTOP	CAUTION 2 - ROOFTOP
	INFO 4	CAUTION - TOWER	WARNING

Based upon protocols presented in AT&T's RF Exposure: Responsibilities, Procedures & Guidelines document, dated October 28, 2014, and additional guidance provided by AT&T, the following signage is recommended on the site:

- Blue NOTICE decals posted around the bottom of the radome of the antenna.

No barriers are required for this site. The signage is graphically represented in the Signage Plan presented in Appendix B.

5.0 SUMMARY AND CONCLUSIONS

EBI has prepared this Radiofrequency Emissions Compliance Report for the proposed AT&T telecommunications equipment at the site located at 3590 Harbor Gateway North in Costa Mesa, California.

EBI has conducted theoretical modeling to estimate the worst-case power density from AT&T antennas to document potential MPE levels at this location and ensure that site control measures are adequate to meet FCC and OSHA requirements, as well as AT&T's corporate RF safety policies. As presented in the preceding sections, based on worst-case predictive modeling, there are no modeled exposures on any accessible utility line level and ground walking/working surface related to ATT's proposed antennas that exceed the FCC's occupational and/or general public exposure limits at this site.

Signage is recommended at the site as presented in Section 4.0 and Appendix B. Posting of the signage brings the site into compliance with FCC rules and regulations and AT&T's corporate RF safety policies.

6.0 LIMITATIONS

This report was prepared for the use of AT&T Mobility, LLC to meet requirements outlined in AT&T's corporate RF safety guidelines. It was performed in accordance with generally accepted practices of other consultants undertaking similar studies at the same time and in the same locale under like circumstances. The conclusions provided by EBI are based solely on the information provided by the client. The observations in this report are valid on the date of the investigation. Any additional information that becomes available concerning the site should be provided to EBI so that our conclusions may be revised and modified, if necessary. This report has been prepared in accordance with Standard Conditions for Engagement and authorized proposal, both of which are integral parts of this report. No other warranty, expressed or implied, is made.

Appendix A

Personnel Certifications

Reviewed and Approved by:

REGISTERED PROFESSIONAL ENGINEER
MICHAEL A. McGUIRE
E18898
EXP. 30 SEP 19
ELECTRICAL
STATE OF CALIFORNIA

sealed 6jun2018

Michael McGuire
Electrical Engineer

Note that EBI's scope of work is limited to an evaluation of the Radio Frequency – Electromagnetic Energy (RF-EME) field generated by the antennas and broadcast equipment noted in this report. The engineering and design of the structure, as well as the impact of the antennas and broadcast equipment on the structural integrity of the structure, are specifically excluded from EBI's scope of work.

Preparer Certification

I, Ryan Eaton, state that:

- I am an employee of EnviroBusiness Inc. (d/b/a EBI Consulting), which provides RF-EME safety and compliance services to the wireless communications industry.
- I have successfully completed RF-EME safety training, and I am aware of the potential hazards from RF-EME and would be classified "occupational" under the FCC regulations.
- I am familiar with the FCC rules and regulations as well as OSHA regulations both in general and as they apply to RF-EME exposure.
- I have been trained in on the procedures outlined in AT&T's RF Exposure: Responsibilities, Procedures & Guidelines document (dated October 28, 2014) and on RF-EME modeling using RoofView® modeling software.
- I have reviewed the data provided by the client and incorporated it into this Site Compliance Report such that the information contained in this report is true and accurate to the best of my knowledge.

Appendix B

Compliance/Signage Plan

At the nearest walking/working surfaces to the AT&T antenna, the maximum power density generated by the AT&T antenna is approximately 57.10 percent of the FCC's general public limit (11.42 percent of the FCC's occupational limit). The composite exposure level from all carriers on this site is approximately 57.10 percent of the FCC's general public limit (11.42 percent of the FCC's occupational limit) at the nearest walking/working surface to each antenna. Based on worst-case predictive modeling, there are no areas at ground level related to the proposed AT&T antenna that exceed the FCC's occupational or general public exposure limits at this site. At ground level, the maximum power density generated by the AT&T antenna is approximately 1.00 percent of the FCC's general public limit (0.20 percent of the FCC's occupational limit).

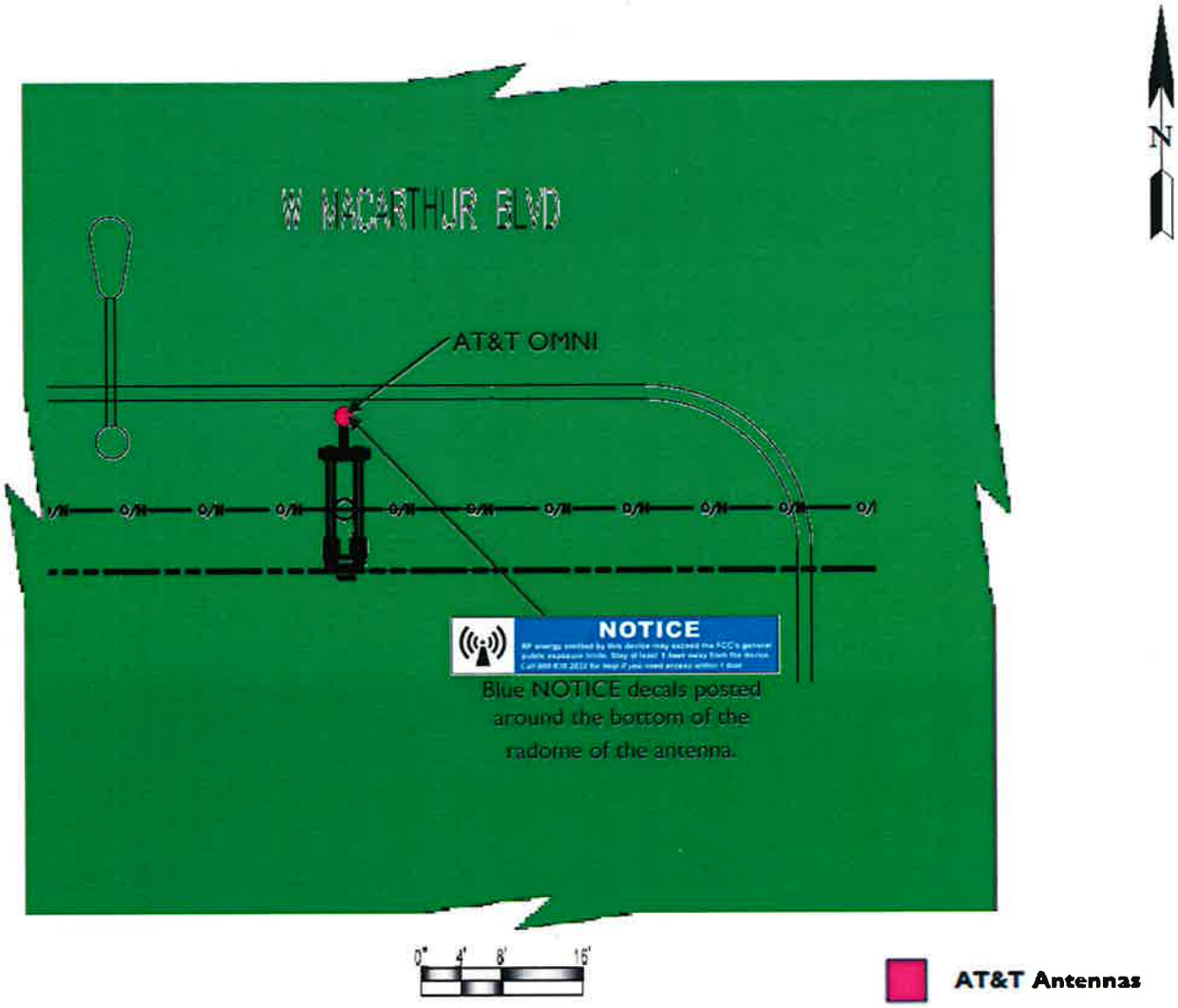

% FCC Public Exposure Limit	
	Exposure Level ≥ 5,000
	500 < Exposure Level ≤ 5,000
	100 < Exposure Level ≤ 500
	Exposure Level ≤ 100

Sign Identification Legend			
	Denotes AT&T Information Sign 1		Denotes AT&T NOTICE Sign
	Denotes AT&T Information Sign 2		Denotes AT&T CAUTION Sign
at&t	Denotes AT&T Information Sign 3		Denotes AT&T CAUTION Tower Sign
	Denotes AT&T Information Sign 4		Denotes AT&T WARNING Sign

Compliance/Signage Plan

Facility Operator: AT&T Mobility
Site Name: HBNPB 20B
AT&T Site Number: CRAN_RLOS_HBNPB_020
USID Number: 188431
Report Date: 06-19-18

EBI Consulting
environmental | engineering | due diligence

Statement of CLEC and CPUC Status

New Cingular Wireless PCS LLC ("NCW") dba AT&T Mobility is a telephone corporation that provides wireless service in the City of Costa Mesa pursuant to a Wireless Identification Registration Number, U 3060 C, issued by the California Public Utilities Commission. Section 7901 of the California Public Utilities Code authorizes telephone corporations to construct facilities in the public right of way. Thus, as a registered wireless carrier, NCW is allowed to construct facilities in the public right of way.

NCW does not have and is not required to have a Certificate of Public Convenience and Necessity (CPCN). The CPUC terminated the requirement for wireless carriers to have CPCNs in 1994 and replaced it with the registration process. Please see Section 1013 of the Cal. Pub. Util. Code and attached letter from CPUC.

Under Cal. Pub. Utils. Code §§ 7901 & 7901.1 (excerpted below), AT&T has an affirmative right to deploy its facilities in public right-of-way subject to the city's police power to control the location and manner of an installation. The city police power, however, is limited, and it must exercise this authority in a reasonable and nondiscriminatory manner. See 7901.1.

PUBLIC UTILITIES CODE SECTION 7901-7901.1

7901. Telegraph or telephone corporations may construct lines of telegraph or telephone lines along and upon any public road or highway, along or across any of the waters or lands within this State, and may erect poles, posts, piers, or abutments for supporting the insulators, wires, and other necessary fixtures of their lines, in such manner and at such points as not to incommode the public use of the road or highway or interrupt the navigation of the waters.

7901.1. (a) It is the intent of the Legislature, consistent with Section 7901, that municipalities shall have the right to exercise reasonable control as to the time, place, and manner in which roads, highways, and waterways are accessed.
(b) The control, to be reasonable, shall, at a minimum, be applied to all entities in an equivalent manner.
(c) Nothing in this section shall add to or subtract from any existing authority with respect to the imposition of fees by municipalities.

STATE OF CALIFORNIA ARNOLD SCHWARZENEGGER, GOVERNOR

PUBLIC UTILITIES COMMISSION
505 VAN NESS AVENUE
SAN FRANCISCO, CA 94102-3298

To: CMSR Registration Applicant

Subject: Information Required to Obtain Wireless Identification Registration (WIR) Number (U Number).

Dear Applicant,

For your information, Commission Decision 94-10-031, (issued on October 12, 1994) established a wireless registration process for all Commercial Mobile Radiotelephone Services (CMRS) providers within California. The Commission has eliminated the Certificate of Public Necessity and Convenience (CPCN) for all CMRS providers. This policy change is a result of action by Congress in the Omnibus Budget Reconciliation Act of 1993, which removed states authority to regulate entry and rates of CMRS providers effective August 10, 1994.

In lieu of the CPCN, the Commission now requires CMRS providers who did not hold a CPCN prior to August 10, 1994, and who intend to offer intrastate wireless telecommunications services within California, to file a Wireless Identification Registration containing the following information concurrent with undertaking such service. This information must be on company letterhead, type of service to be offered, and signed by at least one officer of the company.

1. The legal name of the business offering such service.
2. Any fictitious or other names under which such service will be offered.
3. The local business address for the utility, if any.
4. The home office business address if different than the local business address.
5. The name and address of the designated agent for service of process.
6. Name, title, address, and telephone number of the person to be contacted regarding the reported information.
7. The identity of the directors and principal officers of the business.
8. Names of all affiliated companies and their relationship, indicating if the affiliate is a regulated public utility.
9. Telephone numbers to which service or other customer complaints should be directed.

The information should be filed with the Telecommunications Division. Service can be commenced upon receiving the WIN from the CPUC. You should receive a WIN within a few days after the Commission receives the registration information.

Within 30 days of a change in the status of any of the information items listed above, the carrier shall notify the Telecommunications Division of such change in writing.

If you have questions or need further clarification please call Rudy Sastra at (415) 703-2673.

Sincerely,

Jack Leutza, Director
Telecommunications Division

PLEASE SEND THIS INFORMATION TO:

Rudy Sastra
Carrier Branch
Telecommunications Division
California Public Utilities Commission
505 Van Ness Avenue
San Francisco, CA 94102
(415) 703-2673

CRAN_RLOS_HBNPB_027

1055 El Camino Drive
Costa Mesa, CA 92626

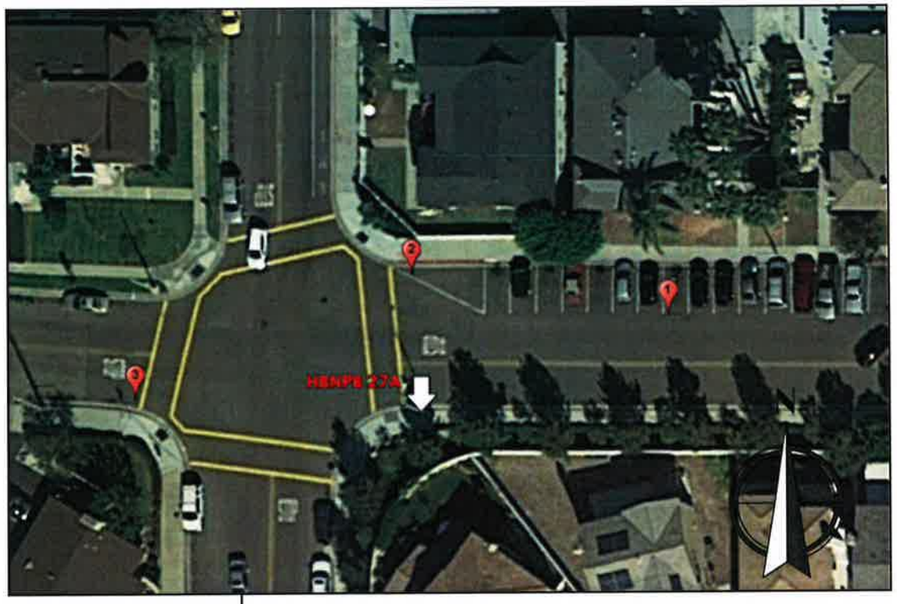

Location Map

Existing Site Conditions

Proposed Site Build

View 1

CRAN_RLOS_HBNPB_027

1055 El Camino Drive
Costa Mesa, CA 92626

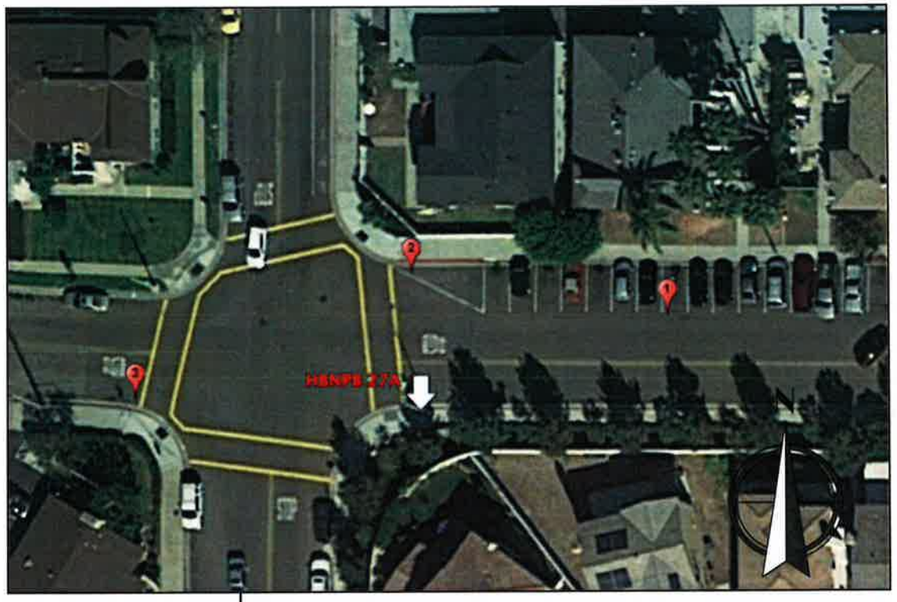

Location Map

Existing Site Conditions

Proposed Site Build

View 2

CRAN_RLOS_HBNPB_027

1055 El Camino Drive
Costa Mesa, CA 92626

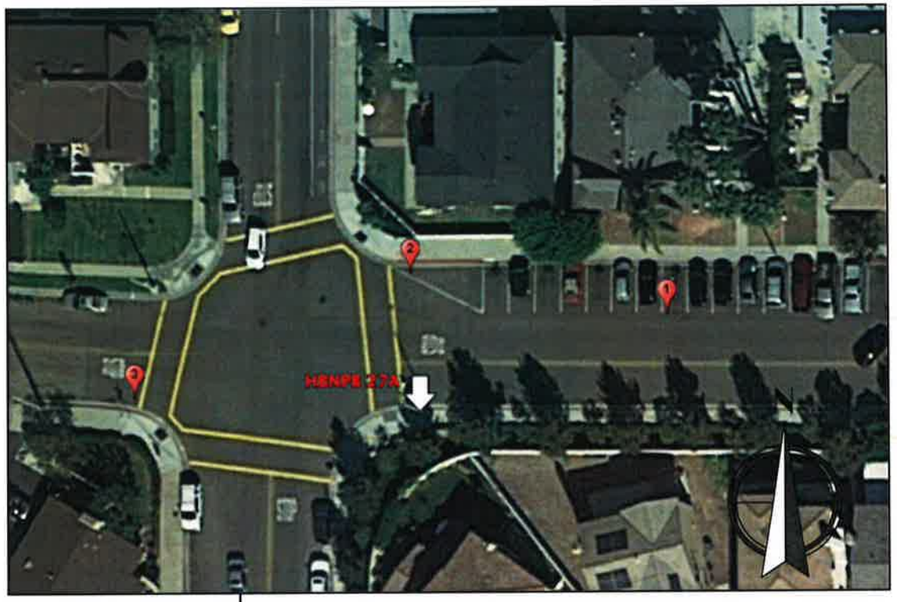

Location Map

Existing Site Conditions

Proposed Site Build

View 3

SITE NAME: HBNPB 27A
SITE NUMBER: CRAN_RLOS_HBNPB_027
PROJECT: CRAN/ SMALL CELL
USID: 188438
PACE: MRLOS045382

at&t

POLE TYPE: (N) CONCRETE LIGHT POLE
POLE ID #: 4788729E
SITE ADDRESS:1055 EL CAMINO DR, COSTA MESA, CA 92626

MINOR CONDITIONAL USE PERMIT
ADMINISTRATIVE ADJUSTMENT NO. 24-18.14
Approval in Concept
SUBJECT TO CONDITIONS
CITY OF COSTA MESA
PLANNING DEPT.
BY JWA DATE 12/05/18

APPROVALS

THE FOLLOWING PARTIES HEREBY APPROVE AND ACCEPT THESE DOCUMENTS & AUTHORIZE THE SUBCONTRACTOR TO PROCEED WITH THE CONSTRUCTION DESCRIBED HEREIN. ALL DOCUMENTS ARE SUBJECT TO REVIEW BY THE LOCAL BUILDING DEPARTMENT & MAY IMPOSE CHANGES OR MODIFICATIONS.

APPROVED BY:	INITIALS:	DATE:
AT&T RF ENGINEER:		
AT&T OPERATIONS:		
SITE ACQUISITION MANAGER:		
PROJECT MANAGER:		
ZONING VENDOR:		
LEASING VENDOR:		
CONSTRUCTION MANAGER:		
A/E MANAGER:		
PROPERTY OWNER:		
UTILITY MANAGER:		

PROJECT DESCRIPTION

AT&T PROPOSES TO INSTALL A NEW WIRELESS INSTALLATION LOCATED IN THE PUBLIC RIGHT OF WAY TO (N) CONCRETE LIGHT POLE.

THE SCOPE WILL CONSIST OF THE FOLLOWING:

* SCE TO REMOVE (1) EXISTING CONCRETE STREETLIGHT
* SCE TO INSTALL (1) 29'-3" CONCRETE STREETLIGHT
* AT&T TO INSTALL (4) NEW AT&T REMOTE RADIO UNITS
* AT&T TO INSTALL (1) NEW AT&T OMNI-DIRECTIONAL ANTENNA
* AT&T TO INSTALL (1) NEW AT&T 14" DIAMETER EQUIPMENT SHROUD
* AT&T TO INSTALL (1) NEW RAYCAP DISCONNECT
* AT&T TO INSTALL (1) NEW HANDHOLE

PROJECT SITE INFORMATION

PUBLIC/PRIVATE:	PUBLIC RIGHT-OF-WAY
ADDRESS:	1055 EL CAMINO DR, COSTA MESA, CA 92626
APPLICANT:	AT&T
ADDRESS:	1452 EDINGER AVE TUSTIN, CA 92780
LATITUDE (NAD 83):	33.675727
LONGITUDE (NAD 83):	-117.900790
LAT/LONG TYPE:	NAD-83
GROUND ELEVATION (NAVD 88)	±44.43'
ADJACENT TO APN #:	141-671-22
JURISDICTION:	CITY OF COSTA MESA
CURRENT ZONING:	PUBLIC RIGHT OF WAY
PROPOSED USE:	UNMANNED TELECOMMUNICATIONS
POWER COMPANY:	SCE
ADDRESS:	1 INNOVATION WAY POMONA, CA 91768

PROJECT TEAM

PROJECT MANAGER:
M SQUARED WIRELESS
1387 CALLE AVANZADO
SAN CLEMENTE, CA 92673

SAC/ZONING/PERMITTING:
M SQUARED WIRELESS
1387 CALLE AVANZADO
SAN CLEMENTE, CA 92673

RF ENGINEER:
AT&T
1452 EDINGER AVE.
TUSTIN, CA 92618
CONTACT: KARLO DAVINAGRACIA
PHONE: (714) 566-7310
EMAIL: KD270J@ATT.COM

ENGINEER:
M SQUARED WIRELESS
1367 CALLE AVANZADO
SAN CLEMENTE, CA 92673

SENIOR TECHNICAL PROJECT MANAGER:
AT&T
1452 EDINGER AVE.
TUSTIN, CA 92618
CONTACT: OMAR MERE
PHONE: (562) 293-6429
EMAIL: OM5039@ATT.COM

AREA MAPS

VICINITY MAP

LOCATION MAP

DRIVING DIRECTIONS

DIRECTIONS FROM AT&T OFFICE:

DIRECTION ARE TAKEN FROM
1452 EDINGER AVE.
TUSTIN, CA 92780

1. TURN LEFT ONTO EDINGER AVE
2. TURN LEFT ONTO STATE ROUTE 55 S
3. TAKE EXIT 5B TOWARD BAKER ST
4. TURN RIGHT ONTO BAKER ST
5. TURN LEFT ONTO MENDOZA DR
6. TURN LEFT ONTO EL CAMINO DR

DESTINATION WILL BE ON THE RIGHT.
1055 EL CAMINO DR, COSTA MESA, CA 92626

DIG ALERT

811

Dig Alert
Know what's below.
Call before you dig.

CALIFORNIA SOUTH
Call Two Working Days Before You Dig!
811 / 800-227-2600

DO NOT SCALE DRAWINGS

SUBCONTRACTOR SHALL VERIFY ALL PLANS & EXISTING DIMENSIONS & CONDITIONS ON THE JOB SITE & SHALL IMMEDIATELY NOTIFY THE ENGINEER IN WRITING OF ANY DISCREPANCIES BEFORE PROCEEDING WITH THE WORK OR BE RESPONSIBLE FOR SAME.

CONSTRUCTION DRAWING

IF USING 11"x17" PLOT, DRAWING WILL BE HALF SCALE

DRAWING INDEX

SHEET NO:	SHEET TITLE
T-1	TITLE SHEET
GN-1	GENERAL NOTES
A-1	SITE PLAN
A-2	ELEVATIONS
A-3	ELEVATIONS
A-4	SITE IMAGE
D-1	DETAILS
S-1	POLE DETAILS
S-2	POLE FOUNDATION DETAILS
E-1	ELECTRICAL DETAILS

CODE COMPLIANCE

ALL WORK AND MATERIALS SHALL BE PERFORMED AND INSTALLED IN ACCORDANCE WITH THE CURRENT EDITIONS OF THE FOLLOWING CODES AS ADOPTED BY THE LOCAL GOVERNING AUTHORITIES. NOTHING IN THESE PLANS IS TO BE CONSTRUCTED TO PERMIT WORK NOT CONFORMING TO THESE CODES.

1. 2016 CALIFORNIA ADMINISTRATIVE CODE
2. 2016 CALIFORNIA BUILDING CODE
3. 2016 CALIFORNIA ELECTRIC CODE
4. 2016 CALIFORNIA MECHANICAL CODE
5. 2016 CALIFORNIA PLUMBING CODE
6. 2016 CALIFORNIA FIRE CODE
7. ANY LOCAL BUILDING CODE AMENDMENTS TO THE ABOVE
8. CITY/COUNTY ORDINANCES

HANDICAP REQUIREMENTS:

FACILITY IS UNMANNED AND NOT FOR HUMAN HABITATION. HANDICAPPED ACCESS NOT REQUIRED IN ACCORDANCE WITH CALIFORNIA ADMINISTRATIVE STATE CODE PART 2, TITLE 24, CHAPTER 11B, SECTION 1103B.

GENERAL NOTES

THE FACILITY IS UNMANNED AND NOT FOR HUMAN HABITATION. A TECHNICIAN WILL VISIT THE SITE AS REQUIRED FOR ROUTINE MAINTENANCE. THE PROJECT WILL NOT RESULT IN ANY SIGNIFICANT DISTURBANCE OR EFFECT ON DRAINAGE; NO SANITARY SEWER SERVICE, POTABLE WATER, OR TRASH DISPOSAL IS REQUIRED AND NO COMMERCIAL SIGNAGE IS NEW.

at&t

ERICSSON
330 COMMERCE, STE. 200
IRVINE, CA 92602

M SQUARED WIRELESS
1367 CALLE AVANZADO
SAN CLEMENTE CA 92673 (949) 391-0034

DRAWN BY:	DGM
CHECKED BY:	MM

REV	DATE	DESCRIPTION
F	05/25/18	100% CONSTRUCTION
E	02/05/18	100% CONSTRUCTION
D	12/13/17	100% CONSTRUCTION
C	12/07/17	95% CONSTRUCTION
B	12/01/17	PER CLIENT REVIEW
A	11/09/17	90% CONSTRUCTION

IT IS A VIOLATION OF LAW FOR ANY PERSON, UNLESS THEY ARE ACTING UNDER THE DIRECTION OF A LICENSED PROFESSIONAL ENGINEER, TO ALTER THIS DOCUMENT.

SITE ID: HBNPB 27A
1055 EL CAMINO DR
COSTA MESA, CA, 92626

SHEET TITLE
TITLE SHEET

SHEET NUMBER
T-1

NEW ANTENNA	
EXISTING ANTENNA	
GROUND ROD	
GROUND BUS BAR	
MECHANICAL GRND. CONN.	
CADWELD	
GROUND ACCESS WELL	
ELECTRIC BOX	
TELEPHONE BOX	
LIGHT POLE	
FND. MONUMENT	
SPOT ELEVATION	
SET POINT	
REVISION	
GRID REFERENCE	A
DETAIL REFERENCE	ou
	X
ELEVATION REFERENCE	OH/W OH/W
	OW OW
SECTION REFERENCE	OP OP
	E
	F/P

GROUT OR PLASTER	
(E) BRICK	
(E) MASONRY	
CONCRETE	
EARTH	
GRAVEL	
PLYWOOD	
SAND	
WOOD CONT.	
WOOD BLOCKING	
STEEL	
CENTERLINE	
PROPERTY/LEASE LINE	
MATCH LINE	
WORK POINT	
GROUND CONDUCTOR	
COAXIAL CABLE	
OVERHEAD SERVICE CONDUCTORS	
CHAIN LINK FENCING	
OVERHEAD TELEPHONE/OVERHEAD POWER	
OVERHEAD TELEPHONE LINE	
OVERHEAD POWER LINE	
POWER RUN	
FIBER/POWER RUN	

T T	TELCO RUN
T/E	POWER/TELCO RUN
G G	GROUNDING CONDUCTOR
	GROUNDING CONDUCTOR
	CONDUIT UNDERGROUND
	FUSE, SIZE AND TYPE AS INDICATED.
	SAFETY SWITCH, 2P-240V-60A W/60A FUSES, NEMA 3R ENCLOSURE, SQ D CATALOG NO. H222NRB
	MANUAL TRANSFER SWITCH, 2P-240V-200A, NO FUSE, NEMA 3R ENCLOSURE
	LIGHTING FIXTURE, FLUORESCENT, 10.94" x 4'-0", 2/40W, SURFACE MOUNTING TYPE, HUBBELL LIGHTING CATALOG #WSW232T
	LIGHTING FIXTURE, FLUORESCENT, 10.94" x 8'-0", 2/95W, SURFACE MOUNTING TYPE, HUBBELL LIGHTING CATALOG #TWSM232T
	LIGHTING FIXTURE, HIGH PRESSURE SODIUM, 1/70W, WALL MOUNTING TYPE, HUBBELL LIGHTING CATALOG #NRG-307 OR 1/50W, HUBBELL LIGHTING CATALOG #NRG-121
	EXIT SIGN, THERMOPLASTIC LED, SINGLE FACE, UNIVERSAL MOUNTING, W/BATTERY PACK, HUBBELL LIGHTING CATALOG #PRB
EXIT	COMBINATION, EXIT SIGN & EMERGENCY LIGHTING, HUBBELL LIGHTING CATALOG #PRC
	EMERGENCY LIGHTING, 2/50W, HUBBELL LIGHTING CATALOG #HE6-50-2-R91
	LIGHTING FIXTURE, INCANDESCENT, 1/100W, WALL MOUNTING TYPE, HUBBELL LIGHTING CATALOG #BRH-100-08-1
	LIGHTING FIXTURE, HALOGEN, QUARTZ, 1/300W, HUBBELL LIGHTING CATALOG #QL-505
	LIGHTING FIXTURE, 1/175W. METAL HALIDE, HUBBELL CAT #MIC-0175H-336
	5/8" X 10'-0" ,CU. GND ROD 30" MIN. BELOW GRADE.

	5/8" X 10'-0" ,CU. GND ROD IN TEST WELL 30" MIN. BELOW GRADE.
	CHEMICAL GROUND ROD (XIT GROUND ROD)
	CADWELD CONNECTION
	MECHANICAL CONNECTION
	HALO GROUND CONNECTION
	CIRCUIT BREAKER
	UTILITY METER BASE
	TRANSFORMER
T	STEPDOWN TRANSFORMER
	RECEPTACLE, 2P-3W-125V-15A, DUPLEX, GROUND TYPE, HUBBEL CATALOG #5362
S	TOGGLE SWITCH, 1P-125V-15A, HUBBELL CATALOG #HBL 1201CN
S_{WP}	TOGGLE SWITCH, 1P-120V-15A, "WP"
S	IONIZATION SMOKE DETECTOR W/ALARM HORN & AUXILIARY CONTACT, 120 VAC, GENTEX PART NO. 7100F
	POLE
	(N) POLE MOUNTED XFMER
	(E) POLE MOUNTED XFMR
	(N) PAD MOUNTED XFMER
	(E) PAD MOUNTED XFMER

ABBREVIATIONS

1

A	AMPERE
A.B.	ANCHOR BOLT
ABV.	ABOVE
AC	ALTERNATE CURRENT/AIR CONDITIONER
ACCA	ANTENNA CABLE COVER ASSEMBLY
ADD'L	ADDITIONAL
A.F.F.	ABOVE FINISHED FLOOR
A.F.G.	ABOVE FINISHED GRADE
AIC	AMPERE INTERRUPTING CAPACITY
ALUM.	ALUMINUM
ALT.	ALTERNATE
ANT.	ANTENNA
APPROX.	APPROXIMATE(LY)
ARCH.	ARCHITECT(URAL)
AT.	AMPERE TRIP
AWG.	AMERICAN WIRE GAUGE
BATT.	BATTERY
BD.	BOARD
BLDG.	BUILDING
BLK.	BLOCK
BLKG.	BLOCKING
BM.	BEAM
B.N.	BOUNDARY NAILING
BR.	BRANCH
BRKR.	BREAKER
BTCW.	BARE TINNED COPPER WIRE
BTS.	BASE TRANSMISSION SYSTEM
B.O.F.	BOTTOM OF FOOTING
B/U	BACK-UP CABINET
C	CONDUIT
CAB.	CABINET
CANT.	CANTILEVER(ED)
CB.	CIRCUIT BREAKER
CDMA	CODE-DIVISION MULTIPLE ACCESS (2G & 3G)
CDUK	CONSOLIDATION DISTRIBUTION UNIT KIT
C.I.P.	CAST IN PLACE
CKT.	CIRCUIT
CLG.	CEILING
CLR.	CLEAR
CMU	CONCRETE MASONRY UNIT (JAMB BLOCKS)
COL.	COLUMN
CONC.	CONCRETE
CONN.	CONNECTION(OR)
CONST.	CONSTRUCTION
CONT.	CONTINUOUS
d	PENNY (NAILS)
DBL.	DOUBLE
DC	DIRECT CURRENT
DEM.	DEMAND
DEPT.	DEPARTMENT
D.F.	DOUGLAS FIR
DIA.	DIAMETER
DIAG.	DIAGONAL
DIM.	DIMENSION
DWG.	DRAWING(S)
DWL.	DOWEL(S)
EA.	EACH
EGR.	EMERGENCY GENERATOR RECEPTACLE
EL.	ELEVATION
ELEC.	ELECTRICAL
ELEV.	ELEVATOR

EMT.	ELECTRICAL METALLIC TUBING
E.N.	EDGE NAIL
ENCL.	ENCLOSURE
ENG.	ENGINEER
EQ.	EQUAL
EXST.(E)	EXISTING
EXP.	EXPANSION
EXT.	EXTERIOR
FAB.	FABRICATION(OR)
FAC.	FACTOR
F/A	FIRE ALARM
F.F.	FINISH FLOOR
F.G.	FINISH GRADE
FIN.	FINISH(ED)
FLR.	FLOOR
FLUOR	FLUORESCENT
FDN.	FOUNDATION
F.O.C.	FACE OF CONCRETE
F.O.M.	FACE OF MASONRY
F.O.S.	FACE OF STUD
F.O.W.	FACE OF WALL
F.S.	FINISH SURFACE
FT.(')	FOOT (FEET)
FTG.	FOOTING
FU	FUSE
G	GROUND
GR	GROWTH (CABINET)
GA.	GAUGE
GEN.	GENERATOR
GI.	GALVANIZE(D)
G.F.C. I.	GROUND FAULT CIRCUIT INTERRUPTER
GLB. (GLU-LAM)	GLUE LAMINATED BEAM
GND	GROUND
GPS	GLOBAL POSITIONING SYSTEM
GRND.	GROUND
GSM	GLOBAL SYSTEM MOBILE (2G+ MOBILE TECH.)
HDBC	HARD DRAWN COPPER WIRE
HDR.	HEADER
HGR.	HANGER
HPS	HIGH PRESSURE SODIUM
HT.	HEIGHT
ICGB.	ISOLATED COPPER GROUND BUS
IN.(")	INCH(ES)
INT.	INTERIOR
LB.(#)	POUND(S)
L.B.	LAG BOLTS
L.F.	LINEAR FEET (FOOT)
LG.	LENGTH
L.	LONG(ITUDINAL)
LPS	LOW PRESSURE SODIUM
LTE	LONG TERM EVOLUTION (4G MOBILE TECH.)
MAS.	MASONRY
MAX.	MAXIMUM
M.B.	MACHINE BOLT
MECH.	MECHANICAL
MFR.	MANUFACTURER
MIN.	MINIMUM
MISC.	MISCELLANEOUS
MLO	MAIN LUGS ONLY

MTD.	MOUNTED
MTG.	MOUNTING
MTL.	METAL
MTS.	MANUAL TRANSFER SWITCH
N	NEUTRAL
(N)	NEW
NEMA	NATIONAL ELECTRICAL MANUFACTURERS ASSOC.
NO.(#)	NUMBER
N.T.S.	NOT TO SCALE
OBIF	OPTICAL BASEBAND INTERFACE
OH	OVERHEAD
O.C.	ON CENTER
OPNG.	OPENING
P	POLE
P/C	PRECAST CONCRETE
PCS	PERSONAL COMMUNICATION SERVICES
PH	PHASE
PLY.	PLYWOOD
PNLBD	PANELBOARD
PPC	POWER PROTECTION CABINET
PRC	PRIMARY RADIO CABINET
PRI	PRIMARY
P.S.F.	POUNDS PER SQUARE FOOT
P.S.I.	POUNDS PER SQUARE INCH
P.T.	PRESSURE TREATED
PWR.	POWER (CABINET)
QTY.	QUANTITY
RAD.(R)	RADIUS
RBS	RADIO BASE STATION (BASE STATION 3G NETWORKS)
RCPT.	RECEPTACLE
REF.	REFERENCE
REINF.	REINFORCEMENT(ING)
REQ'D.	REQUIRED
RGS.	RIGID GALVANIZED STEEL
RRU	REMOTE RADIO UNIT (RADIO TRANSCEIVER)
RX-AIT	RECEIVER AIR INTERFACE TRAY
SAF	SAFETY
SCH.	SCHEDULE
SDBC	SOFT DRAWN BARE COPPER
SEC	SECONDARY
SHT.	SHEET
SIM.	SIMILAR
S.N.	SOLID NEUTRAL
SPEC.	SPECIFICATION(S)
SQ.	SQUARE
S.S.	STAINLESS STEEL
STD.	STANDARD
STL.	STEEL
STRUC.	STRUCTURAL
SURF	SURFACE
SW	SWITCH
TEL.	TELEPHONE
TEMP.	TEMPORARY
THK.	THICK(NESS)
TMAS	TOWER MOUNTED AMPLIFIER (DC SUPPLY VOLTAGE)
T.N.	TOE NAIL
T.O.A.	TOP OF ANTENNA
T.O.C.	TOP OF CURB

T.O.F.	TOP OF FOUNDATION
T.O.P.	TOP OF PLATE (PARAPET)
T.O.S.	TOP OF STEEL
T.O.W.	TOP OF WALL
TYP.	TYPICAL
U.G.	UNDER GROUND
U.L.	UNDERWRITERS LABORATORY INC.
UMTS	UNIVERSAL MOBIL TECH. SYS. (3G MOBILE TECH.)
U.N.O.	UNLESS NOTED OTHERWISE
V	VOLT
VAC	VOLT ALTERNATING CURRENT
V.I.F.	VERIFY IN FIELD
W	WATT OR WIRE
WD	WIDE(WIDTH)
W/	WITH
W/O	WITHOUT
WD.	WOOD
W.P.	WEATHERPROOF
WT.	WEIGHT
XFER	TRANSFER
XFMR	TRANSFORMER
XLPE	CROSS-LINK POLYETHYLENE
℄	CENTERLINE
℄	PLATE, PROPERTY LINE

ABBREVIATIONS

2

NOTES FOR EXISTING AT&T CELL SITES:

1. PRIOR TO THE SUBMISSION OF BIDS, THE BIDDING SUBCONTRACTOR SHALL VISIT THE CELL SITE TO FAMILIARIZE WITH THE EXISTING CONDITIONS AND TO CONFIRM THAT THE WORK CAN BE ACCOMPLISHED AS SHOWN ON THE CONSTRUCTION DRAWINGS. ANY DISCREPANCY FOUND SHALL BE BROUGHT TO THE ATTENTION OF CONTRACTOR.
2. SUBCONTRACTOR SHALL VERIFY ALL EXISTING DIMENSIONS AND CONDITIONS PRIOR TO COMMENCING ANY WORK. ALL DIMENSIONS OF EXISTING CONSTRUCTION SHOWN ON THE DRAWINGS MUST BE VERIFIED. SUBCONTRACTOR SHALL NOTIFY THE CONTRACTOR OF ANY DISCREPANCIES PRIOR TO ORDERING MATERIAL OR PROCEEDING WITH CONSTRUCTION.
3. THE EXISTING CELL SITE IS IN FULL COMMERCIAL OPERATION. ANY CONSTRUCTION WORK BY SUBCONTRACTOR SHALL NOT DISRUPT THE EXISTING NORMAL OPERATION. ANY WORK ON EXISTING EQUIPMENT MUST BE COORDINATED WITH CONTRACTOR. ALSO, WORK SHOULD BE SCHEDULED FOR AN APPROPRIATE MAINTENANCE WINDOW USUALLY IN LOW TRAFFIC PERIODS AFTER MIDNIGHT.
4. SINCE THE CELL SITE IS ACTIVE, ALL SAFETY PRECAUTIONS MUST BE TAKEN WHEN WORKING AROUND HIGH LEVELS OF ELECTROMAGNETIC RADIATION. EQUIPMENT SHOULD BE SHUTDOWN PRIOR TO PERFORMING ANY WORK THAT COULD EXPOSE THE WORKERS TO DANGER. PERSONAL RF EXPOSURE MONITORS ARE ADVISED TO BE WORN TO ALERT OF ANY DANGEROUS EXPOSURE LEVELS.
5. SUBCONTRACTOR SHALL DETERMINE ACTUAL ROUTING OF CONDUIT, POWER AND T1 CABLES, GROUNDING CABLES AS SHOWN ON THE POWER, GROUNDING AND TELCO PLAN DRAWING. SUBCONTRACTOR SHALL UTILIZE EXISTING TRAYS AND/OR SHALL ADD NEW TRAYS AS NECESSARY. SUBCONTRACTOR SHALL CONFIRM THE ACTUAL ROUTING WITH THE CONTRACTOR.
6. SUBCONTRACTOR SHALL LEGALLY AND PROPERLY DISPOSE OF ALL SCRAP MATERIALS SUCH AS COAXIAL CABLES AND OTHER ITEMS REMOVED FROM THE EXISTING FACILITY. ANTENNAS REMOVED SHALL BE RETURNED TO THE OWNER'S DESIGNATED LOCATION.

EXISTING AT&T CELL SITE NOTES

3

1. THE FACILITY IS AN UNOCCUPIED DIGITAL TELECOMMUNICATION FACILITY.
2. PLANS ARE NOT TO BE SCALED AND ARE INTENDED TO BE A DIAGRAMMATIC OUTLINE ONLY, UNLESS NOTED OTHERWISE. THE WORK SHALL INCLUDE FURNISHING MATERIALS, EQUIPMENT, APPURTENANCES AND LABOR NECESSARY TO COMPLETE ALL INSTALLATIONS AS INDICATED ON THE DRAWINGS.
3. PRIOR TO THE SUBMISSION OF BIDS, THE CONTRACTORS SHALL VISIT THE JOB SITE AND BE RESPONSIBLE FOR ALL CONTRACT DOCUMENTS, FIELD CONDITIONS AND DIMENSIONS, AND CONFIRMING THAT THE WORK MAY BE ACCOMPLISHED AS SHOWN PRIOR TO PROCEEDING WITH CONSTRUCTION. ANY DISCREPANCIES ARE TO BE BROUGHT TO THE ATTENTION OF THE IMPLEMENTATION ENGINEER AND ENGINEER PRIOR TO PROCEEDING WITH THE WORK.
4. THE CONTRACTOR SHALL OBTAIN, IN WRITING, AUTHORIZATION TO PROCEED BEFORE STARTING WORK ON ANY ITEM NOT CLEARLY DEFINED OR IDENTIFIED BY THE CONTRACT DOCUMENTS.
5. THE CONTRACTOR SHALL INSTALL ALL EQUIPMENT AND MATERIALS IN ACCORDANCE WITH MANUFACTURER'S RECOMMENDATIONS UNLESS SPECIFICALLY INDICATED OTHERWISE OR WHERE LOCAL CODES OR REGULATIONS TAKE PRECEDENCE.
6. ALL WORK PERFORMED AND MATERIALS INSTALLED SHALL BE IN STRICT ACCORDANCE WITH ALL APPLICABLE CODES, REGULATIONS AND ORDINANCES. CONTRACTOR SHALL GIVE ALL NOTICES AND COMPLY WITH ALL LAWS, ORDINANCES, RULES, REGULATIONS AND LAWFUL ORDERS OF ANY PUBLIC AUTHORITY REGARDING THE PERFORMANCE OF THE WORK. MECHANICAL AND ELECTRICAL SYSTEMS SHALL BE INSTALLED IN ACCORDANCE WITH ALL APPLICABLE MUNICIPAL AND UTILITY COMPANY SPECIFICATIONS, AND LOCAL AND STATE JURISDICTIONAL CODES, ORDINANCES AND APPLICABLE REGULATIONS.
7. THE GENERAL CONTRACTOR SHALL SUPERVISE AND DIRECT THE WORK, USING THE BEST SKILLS AND ATTENTION. THE CONTRACTOR SHALL BE SOLELY RESPONSIBLE FOR ALL CONSTRUCTION MEANS, METHODS, TECHNIQUES, SEQUENCES AND PROCEDURES AND FOR COORDINATING ALL PORTIONS OF THE WORK UNDER THE CONTRACT INCLUDING CONTACT AND COORDINATION WITH THE IMPLEMENTATION ENGINEER AND WITH THE LANDLORD'S AUTHORIZED REPRESENTATIVE.
8. SEAL PENETRATIONS THROUGH FIRE RATED AREAS WITH U.L. LISTED AND FIRE CODE APPROVED MATERIALS.
9. PROVIDE A PORTABLE FIRE EXTINGUISHER WITH A RATING OF NOT LESS THAN 2-A OR 2-A10BC WITHIN 75 FEET TRAVEL DISTANCE TO ALL PORTIONS OF THE PROJECT AREA DURING CONSTRUCTION.
10. DETAILS ARE INTENDED TO SHOW END RESULT OF DESIGN. MINOR MODIFICATIONS MAY BE REQUIRED TO SUIT JOB DIMENSIONS OR CONDITIONS, AND SUCH MODIFICATIONS SHALL BE INCLUDED AS PART OF THE WORK.
11. REPRESENTATIONS OF TRUE NORTH, OTHER THAN THOSE FOUND ON THE PLOT OF SURVEY DRAWING (SHEET LS1 OR SHEET C-1), SHALL NOT BE USED TO IDENTIFY OR ESTABLISH THE BEARING OF TRUE NORTH AT THE SITE. THE CONTRACTOR SHALL RELY SOLELY ON THE PLOT OF SURVEY DRAWING AND ANY SURVEYOR'S MARKINGS AT THE SITE FOR THE ESTABLISHMENT OF TRUE NORTH, AND SHALL NOTIFY THE ENGINEER PRIOR TO PROCEEDING WITH THE WORK IF ANY DISCREPANCY IS FOUND BETWEEN THE VARIOUS ELEMENTS OF THE WORKING DRAWINGS AND THE TRUE NORTH ORIENTATION AS DEPICTED ON THE CIVIL SURVEY. THE CONTRACTOR SHALL ASSUME SOLE LIABILITY FOR ANY FAILURE TO NOTIFY THE ENGINEER.
12. THE CONTRACTOR SHALL MAKE NECESSARY PROVISIONS TO PROTECT EXISTING IMPROVEMENTS, PAVING, CURBS, VEGETATION, GALVANIZED SURFACES, ETC., AND UPON COMPLETION OF WORK REPAIR ANY DAMAGE THAT OCCURRED DURING CONSTRUCTION TO THE SATISFACTION OF AT&T.
13. KEEP GENERAL AREA CLEAN, HAZARD FREE, AND DISPOSE OF ALL DIRT, DEBRIS, RUBBISH AND REMOVE EQUIPMENT NOT SPECIFIED AS REMAINING ON THE PROPERTY. LEAVE PREMISES IN CLEAN CONDITION AND FREE FROM PAINT SPOTS, DUST OR SMUDGES OF ANY NATURE.
14. PENETRATIONS OF ROOF MEMBRANES SHALL BE PATCHED/FLASHED AND MADE WATERTIGHT USING LIKE MATERIALS IN ACCORDANCE WITH NRCA ROOFING STANDARDS AND DETAILS. CONTRACTOR SHALL OBTAIN DETAILING CLARIFICATION FOR SITE-SPECIFIC CONDITIONS FROM ENGINEER, IF NECESSARY, BEFORE PROCEEDING.
15. BEFORE ORDERING AND/OR BEFORE FABRICATING/CONSTRUCTING/INSTALLING ANY ITEMS, VERIFY THE TYPES AND QUANTITIES.
16. CONTRACTOR SHALL PROVIDE SITE FOREMAN WITH A CELLULAR PHONE AND PAGER, AND KEEP SAME ON SITE WHENEVER PERSONNEL ARE ON SITE.
17. THE CONTRACTOR SHALL VERIFY ALL DIMENSIONS AND CONDITIONS ON THE SITE AND NOTIFY THE PROJECT MANAGER OF ANY DISCREPANCIES BEFORE STARTING ANY WORK.
18. CONTRACTOR TO PROVIDE COMPLETE SET OF AS BUILT DRAWINGS WITHIN 10 WORKING DAYS OF PROJECT COMPLETION.
19. CONTRACTOR IS TO EXCAVATE 6" BELOW EXISTING GRADE AND SPRAY WITH WEED CONTROL. REPLACE WITH CLASS II AGGREGATE BASE AND CRUSHED WASHED ROCK. AS SPECIFIED ON SITE PLAN.
20. CONTRACTOR SHALL PROVIDE TOILET FACILITY DURING ALL PHASES OF CONSTRUCTION.
21. PRIOR TO THE COMMENCEMENT OF CONSTRUCTION OR THE FABRICATION OF MATERIALS TO BE INSTALLED AT THE SITE, THE CONTRACTOR SHALL FIELD VERIFY ALL DIMENSIONS INCLUDING AS-BUILT DIMENSIONS OF EXISTING STRUCTURES OR STRUCTURAL ELEMENTS HAVING A BEARING ON THE SCOPE OF THE WORK TO BE PERFORMED. IF ANY DISCREPANCY IS FOUND BETWEEN THE VARIOUS ELEMENTS OF THE WORKING DRAWINGS AND THE DIMENSIONS OR CONDITIONS FOUND TO BE EXISTING IN THE FIELD, THE CONTRACTOR SHALL NOTIFY THE ENGINEER AND OBTAIN DESIGN RESOLUTION PRIOR TO PROCEEDING WITH THE PORTION(S) OF THE WORK AFFECTED. THE CONTRACTOR SHALL ASSUME SOLE LIABILITY FOR ANY FAILURE TO SO NOTIFY THE ENGINEER AND OBTAIN RESOLUTION BEFORE PROCEEDING.

GENERAL NOTES

4

at&t

ERICSSON
330 COMMERCE, STE. 200
IRVINE, CA 92602

M SQUARED WIRELESS
1387 CALLE AVANZADO
SAN CLEMENTE CA 92673 (949) 661-6434

DRAWN BY:	DGM
CHECKED BY:	MM

REV	DATE	DESCRIPTION
F	05/25/18	100% CONSTRUCTION
E	02/05/18	100% CONSTRUCTION
D	12/13/17	100% CONSTRUCTION
C	12/07/17	95% CONSTRUCTION
B	12/01/17	PER CLIENT REVIEW
A	11/09/17	90% CONSTRUCTION

IT IS A VIOLATION OF LAW FOR ANY PERSON, UNLESS THEY ARE ACTING UNDER THE DIRECTION OF A LICENSED PROFESSIONAL ENGINEER, TO ALTER THIS DOCUMENT

SITE ID: HBNPB 27A
1055 EL CAMINO DR
COSTA MESA, CA, 92626

SHEET TITLE
GENERAL NOTES

SHEET NUMBER
GN-1

[redacted]

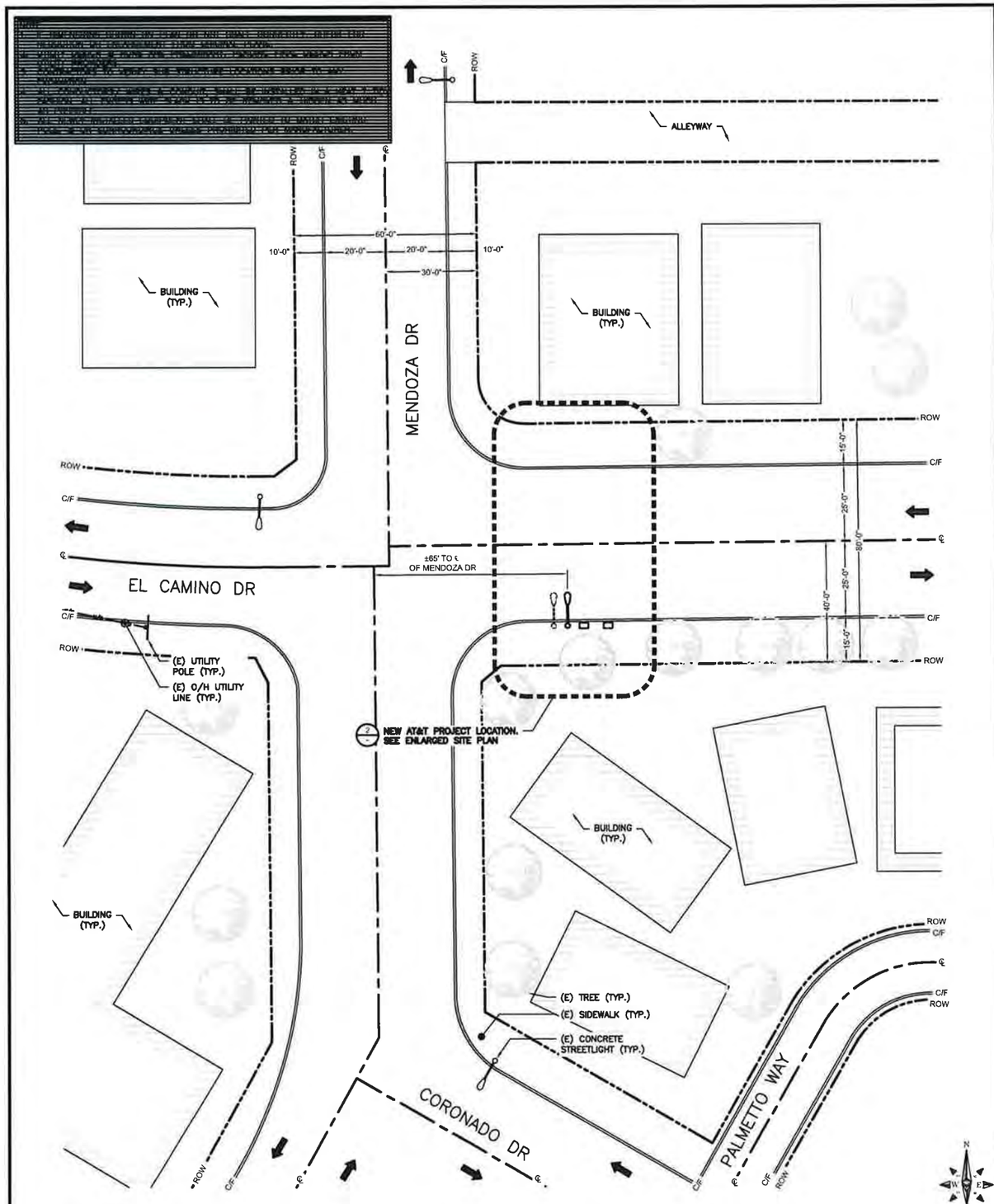

SITE PLAN

24"x36" SCALE: 1" = 20'-0"
11"x17" SCALE: 1" = 40'-0"

0" 10' 20' 40'

1

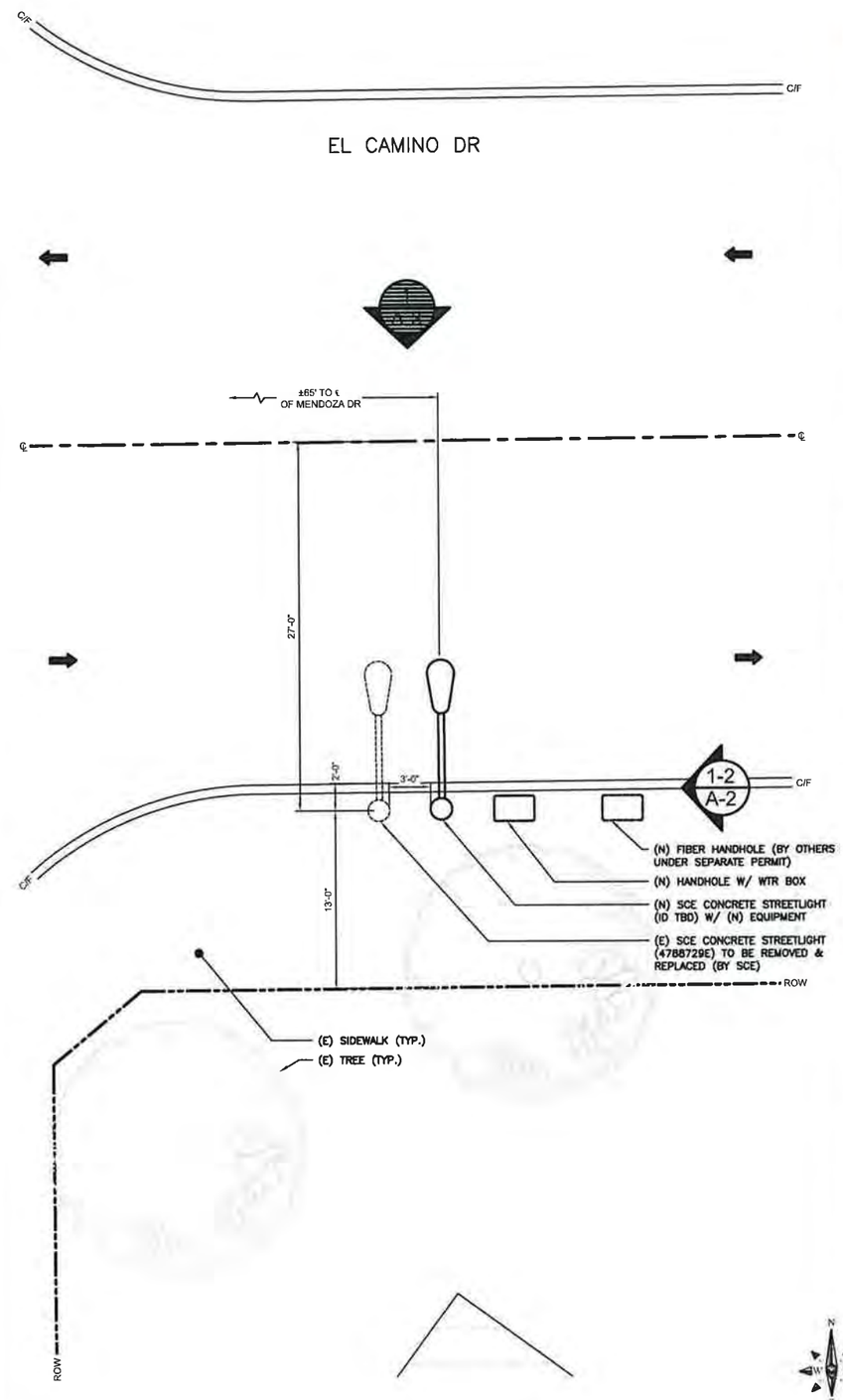

ENLARGED SITE PLAN

24"x36" SCALE: 3/16" = 1'-0"
11"x17" SCALE: 3/32" = 1'-0"

0" 2' 4' 8'

2

at&t

ERICSSON
330 COMMERCE, STE. 200
IRVINE, CA 92602

M SQUARED WIRELESS
1367 CALLE AVANZADO
SAN CLEMENTE CA 92673 (949) 391-0024

DRAWN BY:	DGM
CHECKED BY:	MM

REV	DATE	DESCRIPTION
F	05/25/18	100% CONSTRUCTION
E	02/05/18	100% CONSTRUCTION
D	12/13/17	100% CONSTRUCTION
C	12/07/17	95% CONSTRUCTION
B	12/01/17	PER CLIENT REVIEW
A	11/09/17	90% CONSTRUCTION

IT IS A VIOLATION OF LAW FOR ANY PERSON, UNLESS THEY ARE ACTING UNDER THE DIRECTION OF A LICENSED PROFESSIONAL ENGINEER, TO ALTER THIS DOCUMENT.

SITE ID: HBNPB 27A
1055 EL CAMINO DR
COSTA MESA, CA, 92626

SHEET TITLE
SITE PLAN

SHEET NUMBER
A-1

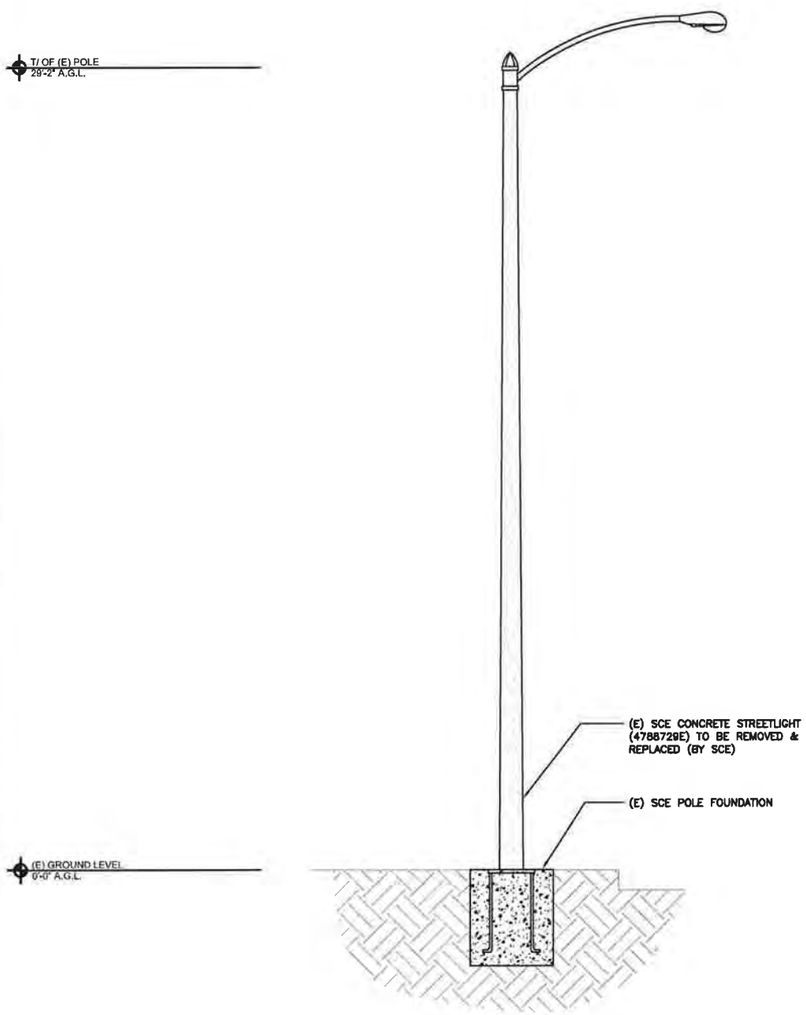

EXISTING EAST ELEVATION

24"x36" SCALE: 3/8" = 1'-0"
11"x17" SCALE: 3/16" = 1'-0"

0" 1' 2' 4'

2

NOTE:
ALL NEW EQUIPMENT SHALL BE PAINTED TO MATCH NEW POLE

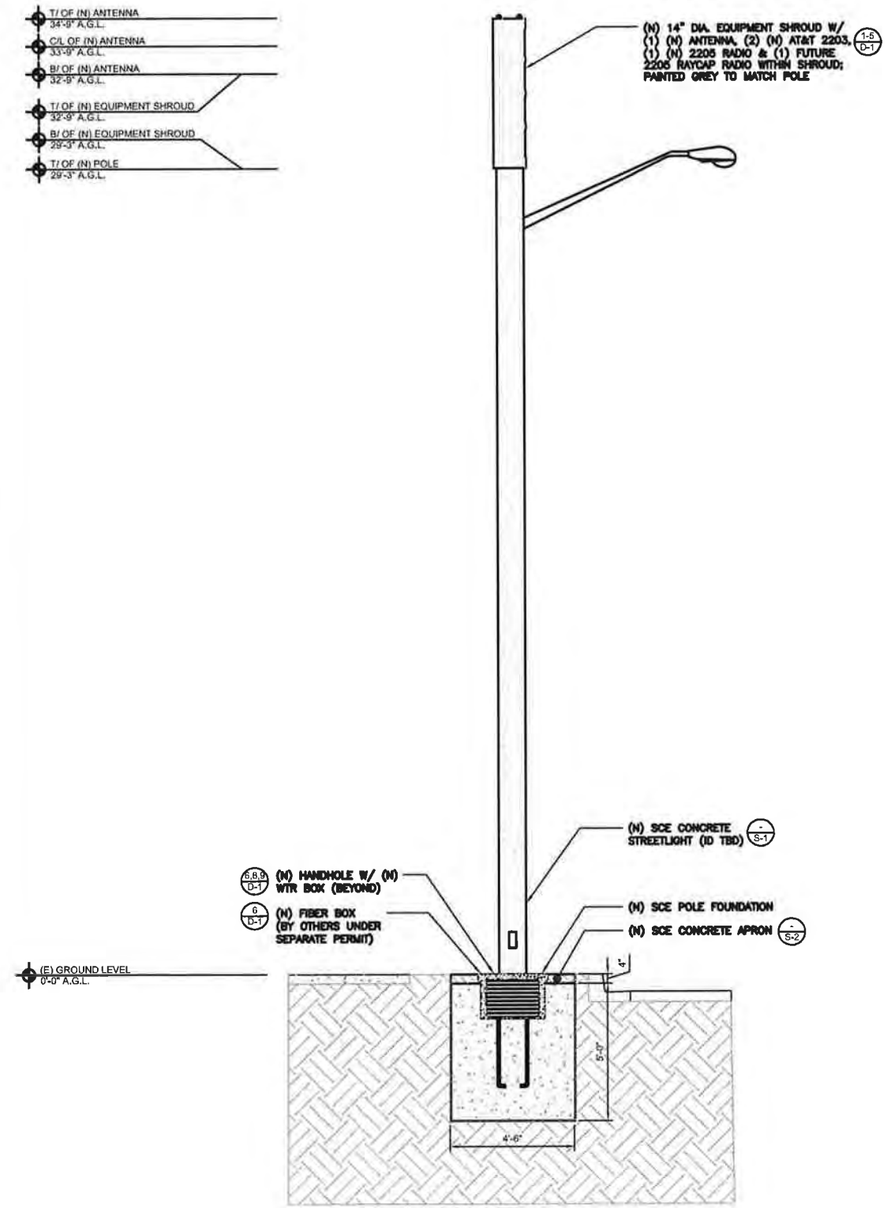

NEW EAST ELEVATION

24"x36" SCALE: 3/8" = 1'-0"
11"x17" SCALE: 3/16" = 1'-0"

0" 1' 2' 4'

1

at&t

ERICSSON
330 COMMERCE, STE. 200
IRVINE, CA 92602

M SQUARED WIRELESS
1387 CALLE AVANZADO
SAN CLEMENTE CA 92673 (949) 291-0924

DRAWN BY:	DGM
CHECKED BY:	MM

REV	DATE	DESCRIPTION
F	05/25/18	100% CONSTRUCTION
E	02/05/18	100% CONSTRUCTION
D	12/13/17	100% CONSTRUCTION
C	12/07/17	95% CONSTRUCTION
B	12/01/17	PER CLIENT REVIEW
A	11/09/17	90% CONSTRUCTION

IT IS A VIOLATION OF LAW FOR ANY PERSON, UNLESS THEY ARE ACTING UNDER THE DIRECTION OF A LICENSED PROFESSIONAL ENGINEER, TO ALTER THIS DOCUMENT.

SITE ID: HBNPB 27A
1055 EL CAMINO DR
COSTA MESA, CA, 92626

SHEET TITLE
ELEVATIONS

SHEET NUMBER
A-2

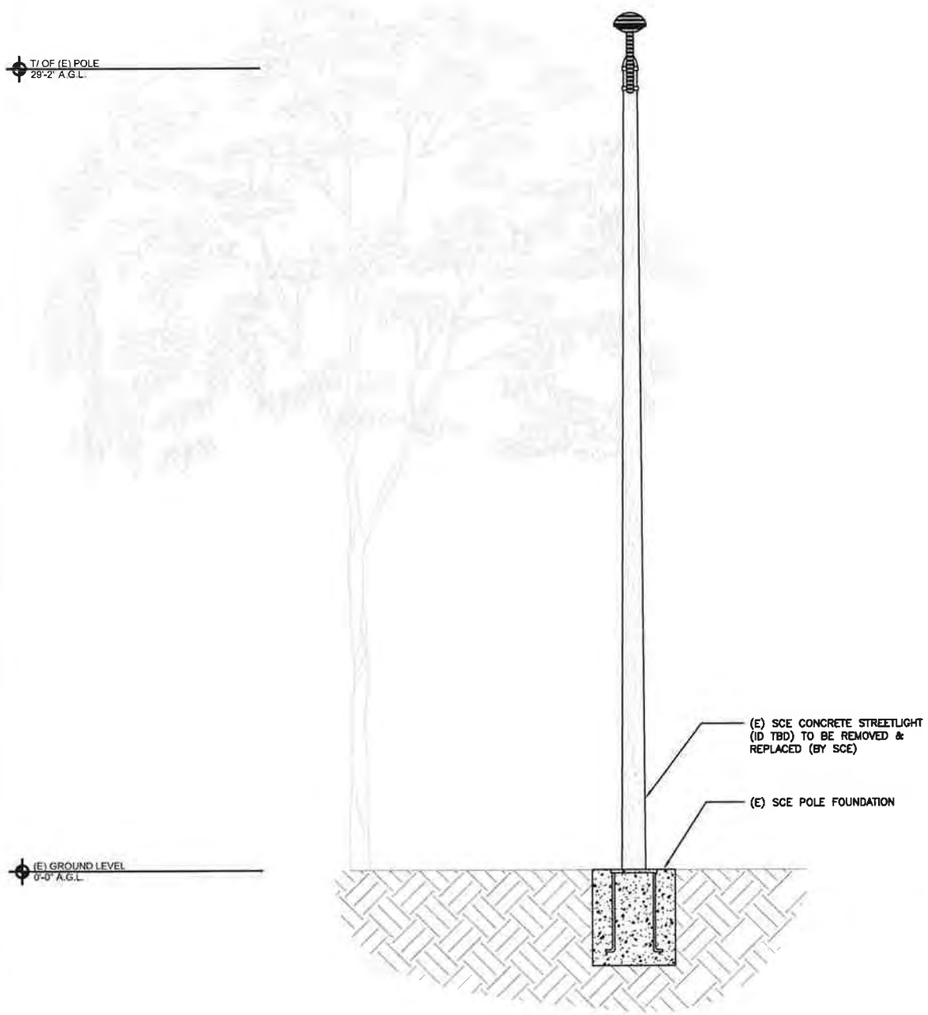

EXISTING NORTH ELEVATION

24"x36" SCALE: 3/8" = 1'-0"
11"x17" SCALE: 3/16" = 1'-0"

0" 1' 2' 4'

2

NOTE:
ALL NEW EQUIPMENT SHALL BE PAINTED TO MATCH NEW POLE

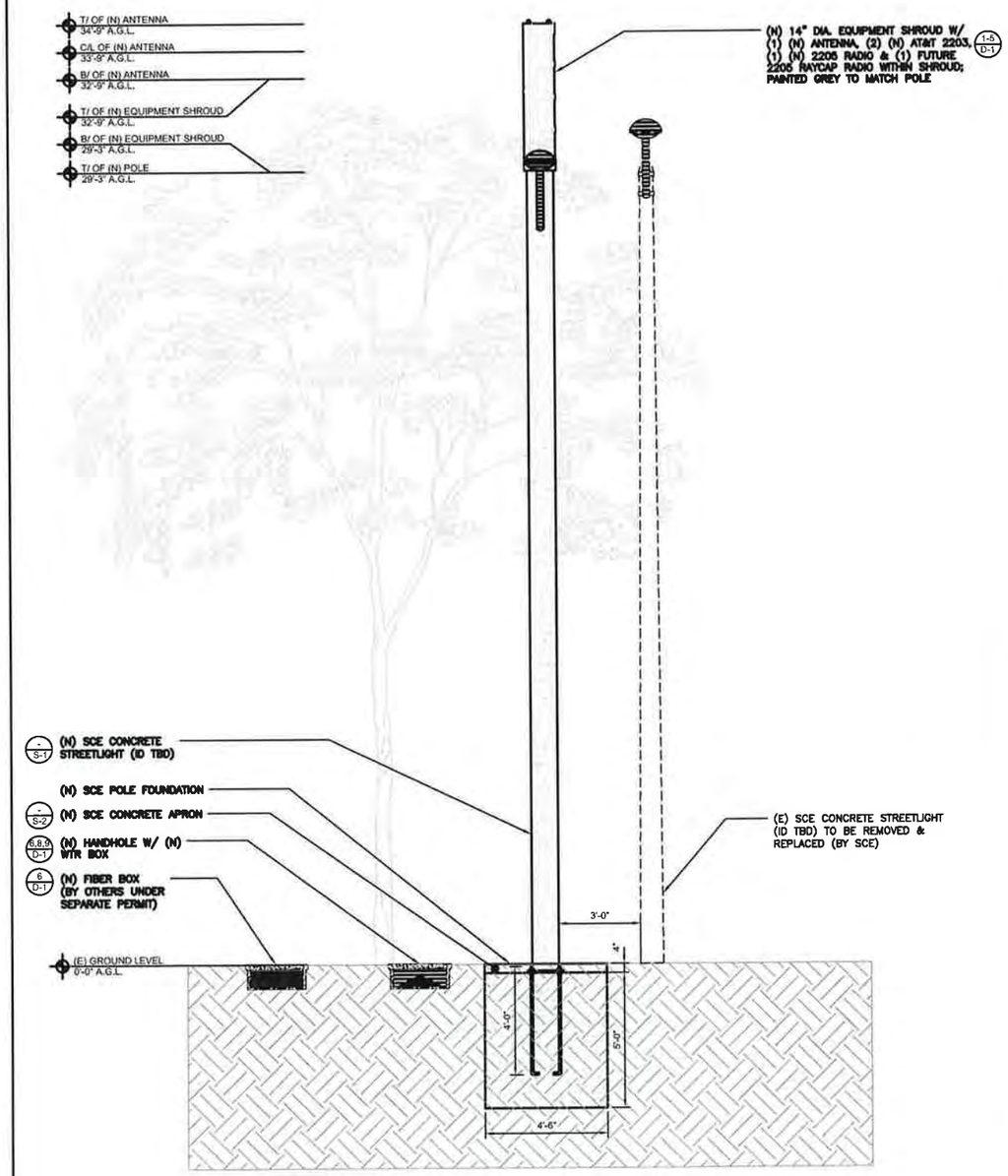

NEW NORTH ELEVATION

24"x36" SCALE: 3/8" = 1'-0"
11"x17" SCALE: 3/16" = 1'-0"

0" 1' 2' 4'

1

at&t

ERICSSON
330 COMMERCE, STE. 200
IRVINE, CA 92602

M SQUARED WIRELESS
1587 CALLE AVANZADO
SAN CLEMENTE CA 92673 (949) 391-5004

DRAWN BY:	DGM
CHECKED BY:	MM

REV	DATE	DESCRIPTION
F	05/25/18	100% CONSTRUCTION
E	02/05/18	100% CONSTRUCTION
D	12/13/17	100% CONSTRUCTION
C	12/07/17	95% CONSTRUCTION
B	12/01/17	PER CLIENT REVIEW
A	11/09/17	90% CONSTRUCTION

IT IS A VIOLATION OF LAW FOR ANY PERSON, UNLESS THEY ARE ACTING UNDER THE DIRECTION OF A LICENSED PROFESSIONAL ENGINEER, TO ALTER THIS DOCUMENT.

SITE ID: HBNPB 27A
1055 EL CAMINO DR
COSTA MESA, CA, 92626

SHEET TITLE
ELEVATIONS

SHEET NUMBER
A-3

PROPOSED SITE LOCATION LOOKING WEST

1

at&t

ERICSSON
330 COMMERCE, STE. 200
IRVINE, CA 92602

M SQUARED WIRELESS
1387 CALLE AVANZADO
SAN CLEMENTE CA 92673 (949) 391-9924

DRAWN BY:	DGM
CHECKED BY:	MM

REV	DATE	DESCRIPTION
F	05/25/18	100% CONSTRUCTION
E	02/05/18	100% CONSTRUCTION
D	12/13/17	100% CONSTRUCTION
C	12/07/17	95% CONSTRUCTION
B	12/01/17	PER CLIENT REVIEW
A	11/09/17	90% CONSTRUCTION

IT IS A VIOLATION OF LAW FOR ANY PERSON, UNLESS THEY ARE ACTING UNDER THE DIRECTION OF A LICENSED PROFESSIONAL ENGINEER, TO ALTER THIS DOCUMENT.

SITE ID: HBNPB 27A
1055 EL CAMINO DR
COSTA MESA, CA, 92626

SHEET TITLE
SITE IMAGE

SHEET NUMBER
A-4

AVAILABLE FROM EXCEL SIGN AND DECAL:
http://www.weneedsigns.com/home.php?cal+1135 AND CLICK ON AT&T
PH: 510-651-0445
N01-DC-16 1"X6" NOTICE DECAL
"For 1 Foot Distance" VINYL DECAL WITH ADHEDSIVE BACKING

NOTICE

RF energy emitted by this device may exceed the FCC's general public exposure limits. Stay at least 1 foot away from the device.
Call 800-638-2822 for help if you need access within 1 foot

Place 3 NOTICE sticker at the bottom of the front of the radome of each antenna.

ANTENNA DISCLAIMER LABEL

24"x36" SCALE: NTS
11"x17" SCALE: NTS

7

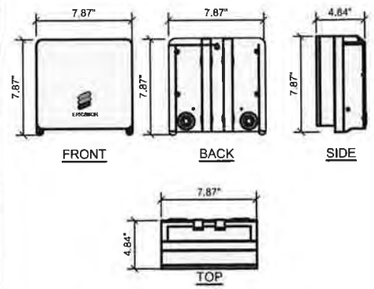

ERICSSON - MICRO RADIO 2205	
MECHANICAL SPECIFICATIONS:	
DIMENSIONS (WxDxH):	7.87"x4.84"x7.87", INCLUDING MOUNTING BRACKET AND ESTHETIC FRONT COVER
VOLUME AND WEIGHT:	4 LITRES AND < 4 kg (8.82 lbs)
MOUNTING:	WALL AND POLE MOUNT
INTERFACE SPECIFICATIONS:	
ANTENNA PORTS:	2 x 4 3-10(F)
CPRI:	2 x 2 5/5/10 Gbps (EXCHANGEABLE SFP MODULES)
OPTICAL INDICATORS:	6
EXTERNAL ALARM:	2
FIELD GROUND:	1
ELECTRICAL SPECIFICATIONS:	
POWER SUPPLY:	-48 VCD OR 100-250 VAC
POWER OUTPUT:	97 WATTS MAX
MAX HEAT DISSIPATION:	90 WATTS
MINIMUM AC FUSE RATING:	6 AMP

MICRO RADIO 2205

24"x36" SCALE: NTS
11"x17" SCALE: NTS

4

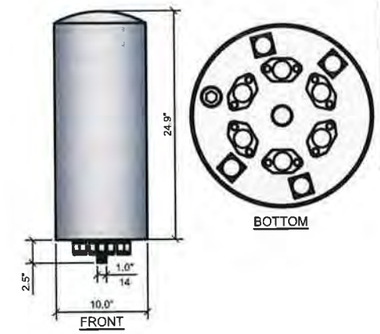

GALTRONICS, GQ2410-06621 PSEUDO OMNI CANISTER ANTENNA	
MECHANICAL SPECIFICATIONS:	
DIMENSIONS (HxD):	24.9 x 10 INCHES (643 x 255 mm)
WEIGHT EXCL MOUNTING BRACKETS:	17 2lbs (9 kg)
NO OF CONNECTORS	10 X 4 3-10 DIN FEMALE
CONNECTOR TYPE & FREQUENCY BAND [MHz]:	4 X 4 3-10 DIN FEMALE (1695-2360) MHz 4 X 4 3-10 DIN FEMALE (3550-3700) MHz 2 X 4 3-10 DIN FEMALE (5150-5950) MHz
MAX WIND SPEED:	150 mph
RADOME MATERIAL:	ASA
SHIPPING DIMS (LxWxD):	30"X19"X19" (762x483x483)mm
GROSS SHIPPING WEIGHT:	26 lbs (12kg)

PART NO GQ2410-06621-11 (GRAY)
PART NO GQ2410-06621-611 (BROWN)
PART NO GQ2410-06621-811 (CHROME)

GALTRONICS P6480-6 OMNI ANTENNA

24"x36" SCALE: NTS
11"x17" SCALE: NTS

1

ELECTROMATE HINGED 3R ENCLOSURE	
DIMENSIONS:	
A	12"
B	12"
C	6"

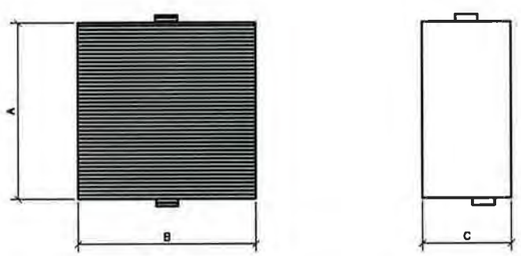

UN-METERED FUSED PANEL

24"x36" SCALE: NTS
11"x17" SCALE: NTS

8

RAYCAP - RSCAC-0533P-120-D

ELECTRICAL	MECHANICAL
SURGE PROTECTION DEVICE (SPD) TYPE TO UL: STRIKESORB 30-A NUMBER OF CIRCUITS PROTECTED: 4 SURGE PROTECTIVE DEVICE (SPD) TYPE PER UL 1449 4TH EDITION: TYPE 2 COMPONENT ASSEMBLY SURGE PROTECTION DEVICE (SPD) CLASS TO IEC 61643-11: CLASS II NOMINAL OPERATING VOLTAGE [UN]: 120 V NOMINAL DISCHARGE CURRENT [IN] PER UL 1449 4TH EDITION: 20 KA 8/20 MS MAXIMUM DISCHARGE CURRENT [IMAX] PER IEC 61643-11 60 KA 8/20 MS MAXIMUM CONTINUOUS OPERATING VOLTAGE [UC] (MCOV) 150V VOLTAGE PROTECTION LEVEL [UP] PER IEC 61643-11: 700V VOLTAGE PROTECTION RATING (VPR): 20 KA 8/20 SUPPRESSION TECHNOLOGY: MOV PROTECTION MODES (DUAL MODE): LINE TO NEUTRAL, NEUTRAL TO GROUND	CONNECTION TERMINAL: COMPRESSION LUG #6 - #14 AWG (13 - 2MM2) TERMINAL BLOCK #10-#26 AWG (5 - 0.14MM2) ENVIRONMENTAL INGRESS PROTECTION (IP) RATING: NEMA 4X OPERATION TEMPERATURE: (°C) -40° C TO +80° C STORAGE TEMPERATURE: (°C) -70° C TO +80° C ENCLOSURE TYPE (OUTDOOR) POLYCARBONATE: UL 94V-0 RATED ENCLOSURE DIMENSION: (L × W × H) 8.58" X 5.06" X 10.08" [217 × 128 × 256 MM] WEIGHT: 2.25 LBS [1.02KG]

SURGE MODULES ARE COMPLIANT TO THE FOLLOWING SURGE PROTECTIVE DEVICE (SPD) STANDARDS: UL 1449 4TH EDITION, 2011 IEC 61643-11 2011 EN 61643-11 2012 IEEE C62.11 2005 IEEE C62.41.2002 IEEE C62.45 2002 NEMA LS-1 CERTIFICATION UL VOC CF

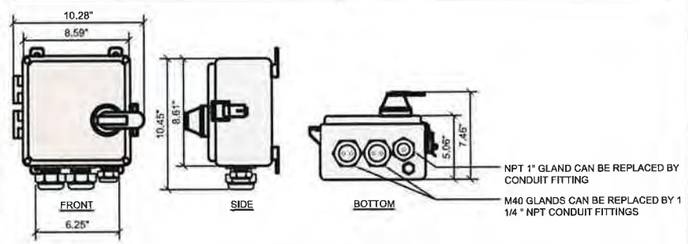

RAYCAP DISCONNECT

24"x36" SCALE: NTS
11"x17" SCALE: NTS

5

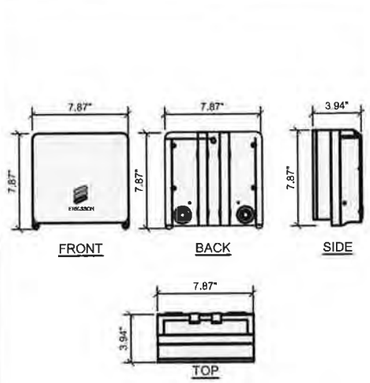

ERICSSON - MICRO RADIO 2203	
MECHANICAL SPECIFICATIONS:	
DIMENSIONS (WxDxH):	7.87"x3.94"x7.87", INCLUDING MOUNTING BRACKET AND ESTHETIC FRONT COVER
VOLUME AND WEIGHT:	4 LITRES AND < 4.5 kg (9.92 lbs)
MOUNTING:	WALL AND POLE MOUNT
INTERFACE SPECIFICATIONS:	
ANTENNA PORTS:	2 x 4 3-10(F)
CPRI:	2 x 2 5/5/10 Gbps (EXCHANGEABLE SFP MODULES)
OPTICAL INDICATORS:	6
EXTERNAL ALARM:	2
FIELD GROUND:	1
ELECTRICAL SPECIFICATIONS:	
POWER SUPPLY:	-48 VCD OR 100-250 VAC
POWER OUTPUT:	97 WATTS MAX
MAX HEAT DISSIPATION:	90 WATTS
MINIMUM AC FUSE RATING:	6 AMP

MICRO RADIO 2203

24"x36" SCALE: NTS
11"x17" SCALE: NTS

2

SQUARE-D HINGED 3R ENCLOSURE # D221NRB	
DIMENSIONS:	
A	7.75"
B	9.63"
C	3.75"

AT&T MOBILITY FUSED DISCONNECT

24"x36" SCALE: NTS
11"x17" SCALE: NTS

9

COVER FEATURES:
- STANDARD LOAD RATING: 20,800 LBS. WHEEL LOAD ON 10"x20" PLATE
- 2 BOLT DOWN LOCATIONS
- STAINLESS STEEL BOX INSERTS
- POLYMER CONCRETE CONSTRUCTION
- NON-SKID SURFACE STANDARD
- 20K TO BE EMBOSSED ON COVER
- APPROXIMATE WEIGHT = 120 LBS.

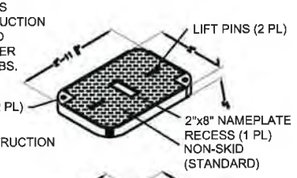

COVER FEATURES:
- POLYMER CONCRETE CONSTRUCTION
- LIGHTWEIGHT
- STACKABLE FOOT
- APPROX. WEIGHT 188 LBS.

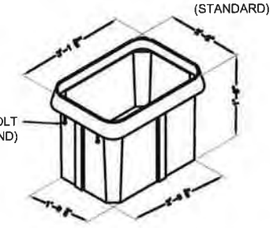

(OR APPROVED EQUAL)

HANDHOLE

24"x36" SCALE: NTS
11"x17" SCALE: NTS

6

CONCEALFAB CONCEALMENT POLE TOP ECCENTRIC	
MECHANICAL SPECIFICATIONS:	
DIMENSIONS (WxDxH):	65"x314"
MOUNTING:	MOUNTS TO TOP OF POLE

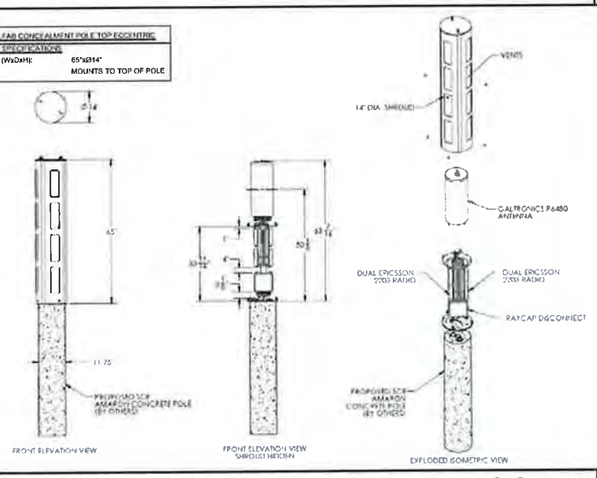

EQUIPMENT SHROUD

24"x36" SCALE: NTS
11"x17" SCALE: NTS

3

at&t

ERICSSON
330 COMMERCE, STE. 200
IRVINE, CA 92602

M SQUARED WIRELESS
1287 CALLE AVANZADO
SAN CLEMENTE CA 92673 (949) 391-0094

DRAWN BY:	DGM
CHECKED BY:	MM

REV	DATE	DESCRIPTION
F	05/25/18	100% CONSTRUCTION
E	02/05/18	100% CONSTRUCTION
D	12/13/17	100% CONSTRUCTION
C	12/07/17	95% CONSTRUCTION
B	12/01/17	PER CLIENT REVIEW
A	11/09/17	90% CONSTRUCTION

IT IS A VIOLATION OF LAW FOR ANY PERSON, UNLESS THEY ARE ACTING UNDER THE DIRECTION OF A LICENSED PROFESSIONAL ENGINEER, TO ALTER THIS DOCUMENT

SITE ID: HBNPB 27A
1055 EL CAMINO DR
COSTA MESA, CA, 92626

SHEET TITLE
DETAILS

SHEET NUMBER
D-1

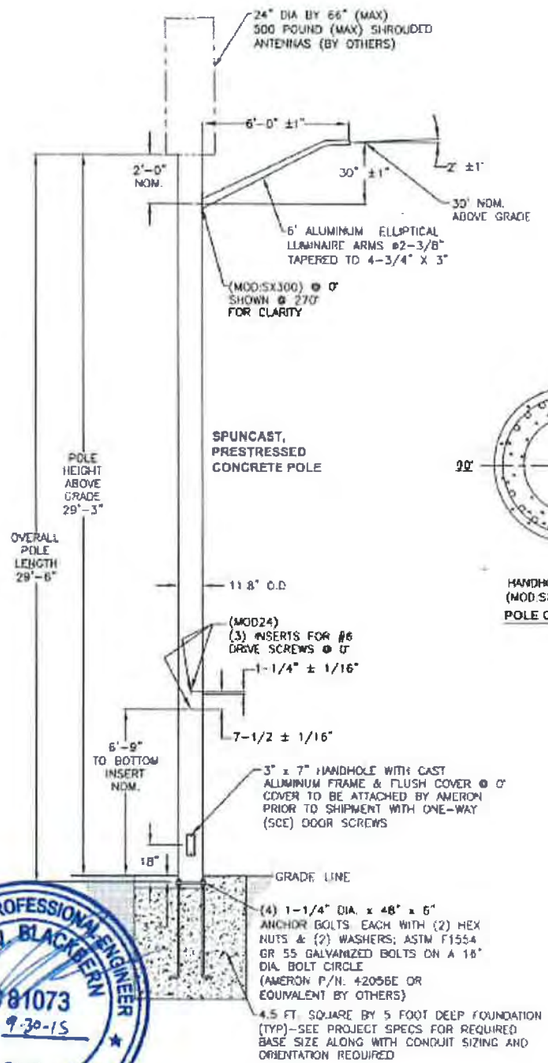

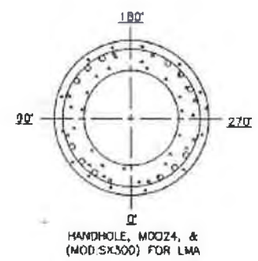

POLE ORIENTATIONS

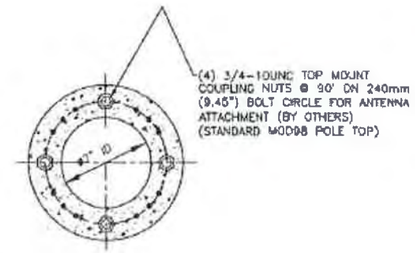

POLE TOP DETAILS

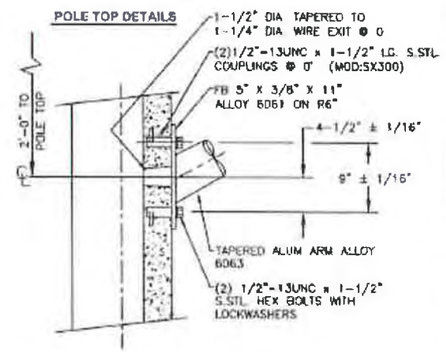

BRACKET ARM TO POLE CONNECTION

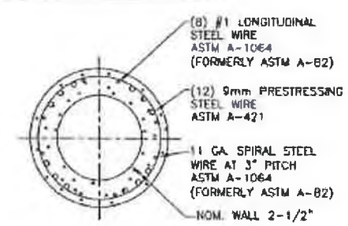

SECTION DETAILS

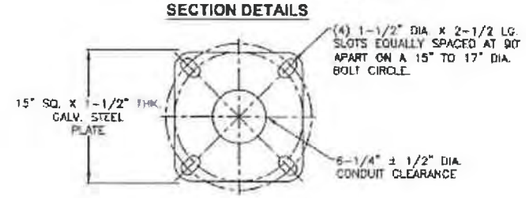

BASE PLATE DETAILS

REV.	DATE	DESCRIPTION	DRN.	APPR.
A	09/07	REDRAWN, ADDED POLE P/N	A.C.	
B	05/08	UPDATED FOR ORACLE	T.L.	
C	02/10	A/B WERE A36M55, NOW A307	J.C.	
D	06/15	UPDATED TO NEW DWG. STDS.	L.P.	

"F" LEVEL CONFIG CODES		
OPTION CLASS	ENTRY	INFO.
COATING	S	
HH COVER	66546E	
DOOR SCRS	SCE	
DRILL IN MOD	MOD24	

"P" LEVEL CONFIG CODES		
OPTION CLASS	ENTRY	INFO.
MIX	81	
FINISH	5	
BASEPLATE	63250E	
COLLAR	NONE	
POLE TOP CON.	MOD98	
CAST-IN MOD	MODSX300	

300MM NON-TAPERED BASE PLATE ROUND POLE

POLE DESIG-NATION	POLE HEIGHT ABOVE GRADE	OVERALL POLE LENGTH	BOLT CIRCLE	BASE O.D.	ULTIMATE G.L. MOMENT (ft.-lbs.)	POLE WEIGHT (lbs.)
BP300X09	29'-3"	29'-6"	16"	11-13/16"	65,000	2900

( ) POLES REQUIRED (P/N: BP300X09-16137), EACH WITH 6' WALL BRACKET ELLIPTICAL ARM (P/N: LAEB6A)

NOTES:

1. MIX (81SS): SCE BLACK & WHITE, LIGHTLY EXPOSED AGGREGATE FINISH WITH FLAT WATER SEALER COATING.
2. ASTM C-150 TYPE III GRAY CEMENT.
3. f'c @ 28 DAYS=7,000 PSI, USING SPUN CYLINDER TEST.
4. f'c @ 28 DAYS=5,000 PSI, USING ASTM C-31 CYLINDER TEST.
5. POLES MANUFACTURED TO ASTM C-1089-13 SPECIFICATIONS.
6. PROTECTIVE COAT EXPOSED P.C. WIRES AT POLE ENDS.
7. THE POLE DEPICTED ON THIS DRAWING IS DESIGNED TO WITHSTAND THE LOADS IMPARTED BY A SINGLE SIDE MOUNTED TAPERED ELLIPTICAL ALUMINUM ARM (NOT TO EXCEED 6' OFFSET, 3.7 SQ. FT. EPA, 25 LBS.) WITH THE ARM HOLDING A DOWNWARD FACING AREA OR PENDENT LUMINAIRE (NOT TO EXCEED 2.0 SQ. FT. EPA, 50 POUNDS); THE POLE ALSO SUPPORTS (1) ANTENNA SHROUD CENTERED 3' ABOVE THE POLE TOP (NOT TO EXCEED 6.3 SQ. FT. EPA, 225 LBS. MAX) AS DESIGNED PER THE 2013 AASHTO LTS-6 (CRITERIA FOR STREET LIGHTING POLES), 2010 CALIFORNIA BUILDING CODE & ASCE7-05 FOR 90 MPH WIND AND SEISMIC ZONE (3-SECOND GUSTS) & SEISMIC CRITERIA Ss=1.75 & S1=0.6. PLEASE CONTACT & ADVISE AMERON ENGINEERING IF THE INTENDED VALUES EXCEED THESE VALUES.
8. DUE TO THE NATURE & CHARACTERISTICS OF CONCRETE, SIDE MOUNT SPACING DIMENSIONS CAN ONLY BE TAKEN TO THE NEAREST 1/8 INCH.

APPROVED BY DATE

REGISTERED PROFESSIONAL ENGINEER
KURT V. BLACKBERN
C 81073
EXP. 9-30-15
CIVIL
STATE OF CALIFORNIA

COMPLIANCE TO ANY CODE NOT EXPLICITLY LISTED ON THIS DRAWING IS NOT GUARANTEED. PLEASE CONTACT AMERON ENGINEERING IF YOU HAVE APPLICABLE CODE REQUIREMENTS.

SOUTHERN CALIFORNIA EDISON
BP300X09 POLE WITH SINGLE 6' ARM

THIS DOCUMENT CONTAINS INFORMATION WHICH IS PROPRIETARY TO AMERON. IT SHALL NOT BE REPRODUCED, USED OR DISCLOSED TO ANYONE WITHOUT THE PRIOR WRITTEN PERMISSION OF AMERON.

AMERON POLE PRODUCTS

DRAWN: SJB	DATE: 10/2003	
SCALE: N.T.S.	DWG. NO. 040-01277	REV D

at&t

ERICSSON
330 COMMERCE, STE. 200
IRVINE, CA 92602

M SQUARED WIRELESS
1587 CALLE AVANZADO
SAN CLEMENTE CA 92673 (949) 361-8924

DRAWN BY: DGM
CHECKED BY: MM

REV	DATE	DESCRIPTION
F	05/25/18	100% CONSTRUCTION
E	02/05/18	100% CONSTRUCTION
D	12/13/17	100% CONSTRUCTION
C	12/07/17	95% CONSTRUCTION
B	12/01/17	PER CLIENT REVIEW
A	11/09/17	90% CONSTRUCTION

IT IS A VIOLATION OF LAW FOR ANY PERSON, UNLESS THEY ARE ACTING UNDER THE DIRECTION OF A LICENSED PROFESSIONAL ENGINEER, TO ALTER THIS DOCUMENT.

SITE ID: HBNPB 27A
1055 EL CAMINO DR
COSTA MESA, CA, 92626

SHEET TITLE
POLE DETAILS

SHEET NUMBER
S-1

MC 890 Foundation Detail for Fiberglass Nostalgic, Fiberglass, Steel, or Concrete Electroliers

Scope MC 890.1 Electrolier Foundation Detail

Figure MC 890–1: Electrolier Foundation Detail

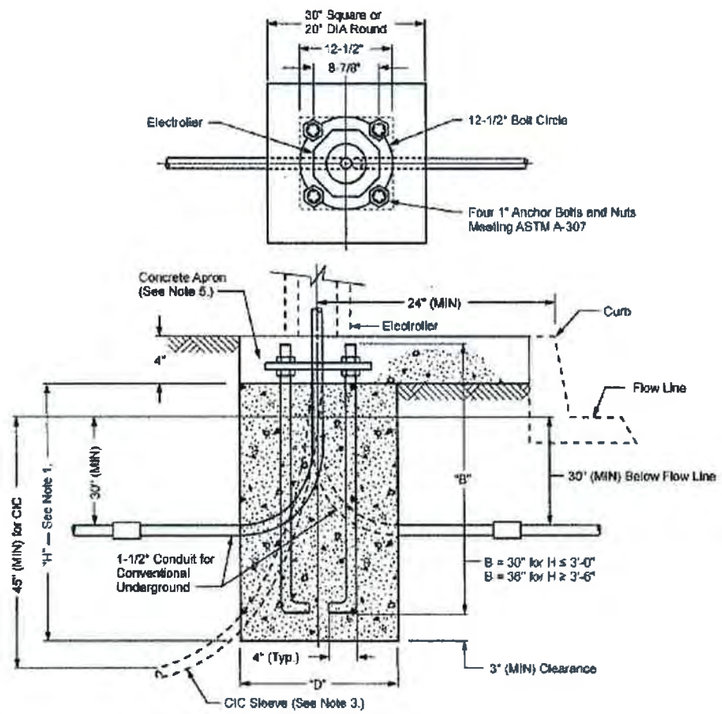

Note(s):

1. The footing depth will vary depending on the type of soil and wind loading requirements. Consult local government agency for requirements. See Table MC 890–1 (Sheet 3) through Table MC 890–4 (Sheet 4).
2. Foundation shall be installed after conduit or CIC (for Underground Service), curbs, and sidewalks are in place and grades are established.
3. 1-1/2" Plastic CIC Sleeve for UG Concrete Electrolier (tape both ends to prevent debris from entering the sleeve).
4. Concrete to reach a minimum compression strength of 2800 psi in 28 days. See UGS 20.3.
5. Place a minimum size concrete apron of 30" x 30" x 4" thick around the pole at the ground level to provide a constrained surface condition when required. Grout to be placed after pole is set and plumbed.

Scope MC 890.3 Electrolier Foundation Requirements

Table MC 890–1: 70 MPH Wind Zone, Constrained Surface Condition

Electrolier Foundation Requirements								
	Soil Type	Fiberglass, Concrete, or Steel				Nostalgic		
		23' Shaft		28' Shaft		All Poles	Fiberglass	Marbelite
	Per UBC[a]	H	D	H	D	H	D	D
I.	Massive Crystalline Bedrock	2'-6"	20" dia.	2'-6"	20" dia.	2'-6"	20" dia.	24" dia.
		2'-6"	30" x 30"	2'-6"	30" x 30"	2'-6"	30" x 30"	30" x 30"
II.	Sedimentary and Foliated Rock	2'-6"	20" dia.	2'-6"	20" dia.	2'-6"	20" dia.	24" dia.
		2'-6"	30" x 30"	2'-6"	30" x 30"	2'-6"	30" x 30"	30" x 30"
III.	Sandy Gravel, Gravel	3'-0"	20" dia.	3'-0"	20" dia.	3'-0"	20" dia.	24" dia
		2'-6"	30" x 30"	2'-6"	30" x 30"	2'-6"	30" x 30"	30" x 30"
IV.	Sand, Silty Sand, Clayey Sand, Silty Gravel, Clayey Gravel	3'-6"	20" dia.	3'-6"	20" dia.	3'-6"	20" dia.	24" dia.
		2'-6"	30" x 30"	2'-6"	30" x 30"	2'-6"	30" x 30"	30" x 30"
V.	Clay, Sands, Sandy Clay, Silty Clay, Clayey Silt	4'-0"	20" dia.	4'-6"	20" dia.	4'-0"	20" dia	24" dia.
		2'-6"	30" x 30"	3'-6"	30" x 30"	2'-6"	30" x 30"	30" x 30"

[a] Uniform Building Code — 1991

Note(s):

1. H = Depth of footing
2. D = Diameter of round footing or the side dimension of square footing.

Table MC 890–2: 70 MPH Wind Zone, Non-Constrained Surface Condition

Electrolier Foundation Requirements								
	Soil Type	Fiberglass, Concrete, or Steel				Nostalgic		
		23' Shaft		28' Shaft		All Poles	Fiberglass	Marbelite
	Per UBC[a]	H	D	H	D	H	D	D
I.	Massive Crystalline Bedrock	2'-6"	20" dia.	2'-6"	20" dia.	2'-6"	20" dia	24" dia.
		2'-6"	30" x 30"	2'-6"	30" x 30"	2'-6"	30" x 30"	30" x 30"
II.	Sedimentary and Foliated Rock	3'-0"	20" dia.	3'-6"	20" dia.	3'-0"	20" dia.	24" dia.
		2'-6"	30" x 30"	2'-6"	30" x 30"	2'-6"	30" x 30"	30" x 30"
III.	Sandy Gravel, Gravel	3'-6"	20" dia.	4'-0"	20" dia.	3'-6"	20" dia.	24" dia
		3'-0"	30" x 30"	3'-0"	30" x 30"	3'-0"	30" x 30"	30" x 30"
IV.	Sand, Silty Sand, Clayey Sand, Silty Gravel, Clayey Gravel	4'-0"	20" dia.	4'-6"	20" dia.	4'-0"	20" dia.	24" dia.
		3'-0"	30" x 30"	3'-6"	30" x 30"	3'-0"	30" x 30"	30" x 30"
V.	Clay, Sands, Sandy Clay, Silty Clay, Clayey Silt	4'-6"	20" dia.	5'-0"	20" dia.	4'-6"	20" dia.	24" dia.
		3'-6"	30" x 30"	4'-0"	30" x 30"	3'-6"	30" x 30"	30" x 30'

[a] Uniform Building Code — 1991

Note(s):

1. H = Depth of footing
2. D = Diameter of round footing or the side dimension of square footing.

at&t

ERICSSON
330 COMMERCE, STE. 200
IRVINE, CA 92602

M SQUARED WIRELESS
1307 CALLE AVANZADO
SAN CLEMENTE CA 92673 (949) 361-6024

DRAWN BY:	DGM
CHECKED BY:	MM

REV	DATE	DESCRIPTION
F	05/25/18	100% CONSTRUCTION
E	02/05/18	100% CONSTRUCTION
D	12/13/17	100% CONSTRUCTION
C	12/07/17	95% CONSTRUCTION
B	12/01/17	PER CLIENT REVIEW
A	11/09/17	90% CONSTRUCTION

IT IS A VIOLATION OF LAW FOR ANY PERSON, UNLESS THEY ARE ACTING UNDER THE DIRECTION OF A LICENSED PROFESSIONAL ENGINEER, TO ALTER THIS DOCUMENT.

SITE ID: HBNPB 27A
1055 EL CAMINO DR
COSTA MESA, CA, 92626

SHEET TITLE
POLE FOUNDATION DETAILS

SHEET NUMBER
S-2

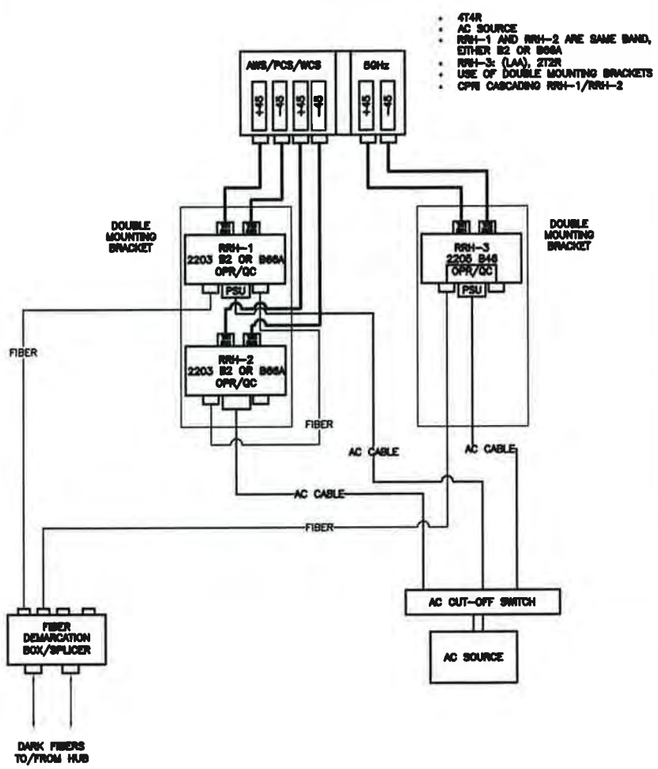

PICO PLUMBING DIAGRAM — 24"x36" SCALE: NTS / 11"x17" SCALE: NTS — 6

NOTE:
ALL GROUND CONDUCTORS TO BE #6 THHN/THWN GREEN STRANDED COPPER UNLESS OTHERWISE NOTED OR REQUIRED BY EQUIPMENT MANUFACTURER.

EXOTHERMIC WELD CONNECTIONS ■
MECHANICAL TYPE CONNECTIONS ●
GROUNDING BAR

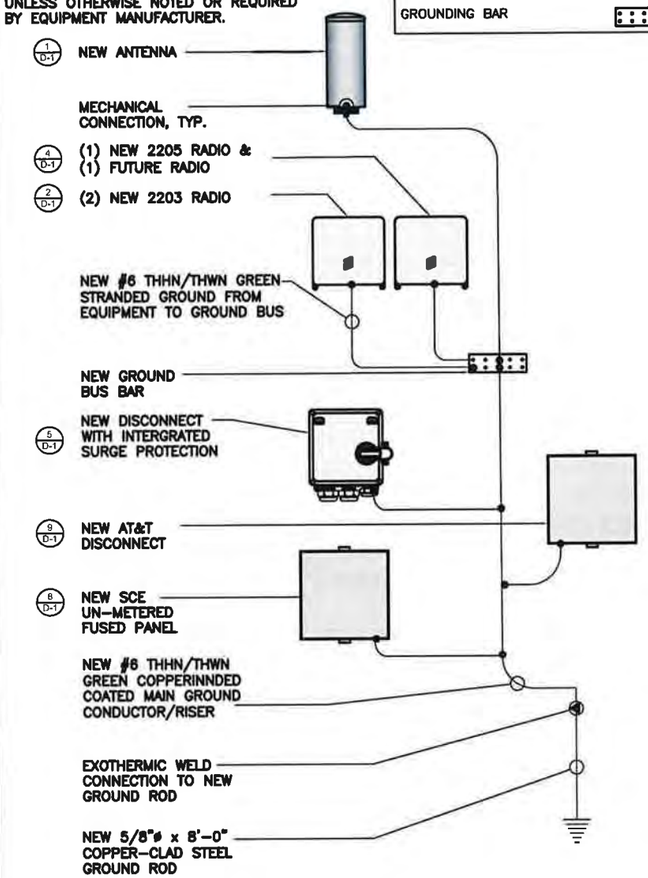

GROUNDING SCHEMATIC — 24"x36" SCALE: NTS / 11"x17" SCALE: NTS — 3

NOTE:
UTILITY DESIGN AND RUNS ARE PRELIMINARY. PENDING FINAL DESIGN FROM UTILITY PROVIDERS

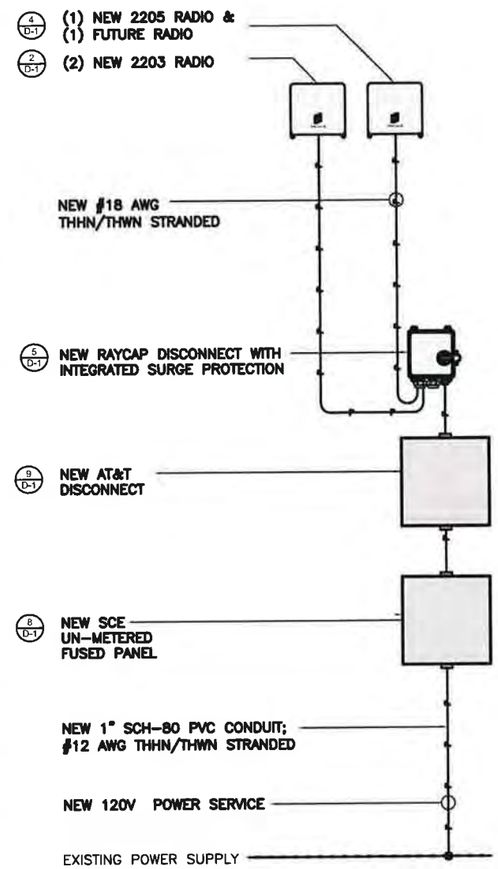

SINGLE LINE DIAGRAM — 24"x36" SCALE: NTS / 11"x17" SCALE: NTS — 1

NOT USED — 24"x36" SCALE: NTS / 11"x17" SCALE: NTS — 7

NOT USED — 24"x36" SCALE: NTS / 11"x17" SCALE: NTS — 4

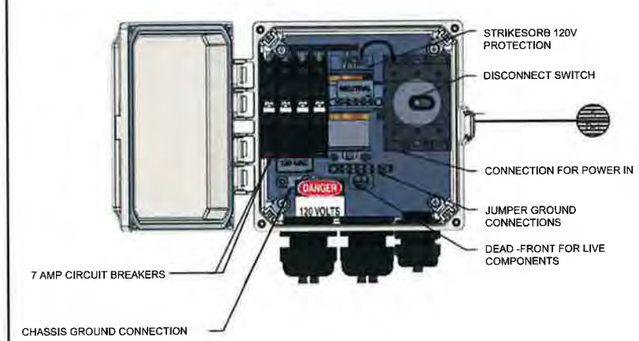

BREAKER SCHEDULE — 24"x36" SCALE: NTS / 11"x17" SCALE: NTS — 2

at&t

ERICSSON
330 COMMERCE, STE. 200
IRVINE, CA 92602

M SQUARED WIRELESS
1307 CALLE AVANZADO
SAN CLEMENTE CA 92673 (949) 361-6024

DRAWN BY:	DGM
CHECKED BY:	MM

REV	DATE	DESCRIPTION
F	05/25/18	100% CONSTRUCTION
E	02/05/18	100% CONSTRUCTION
D	12/13/17	100% CONSTRUCTION
C	12/07/17	95% CONSTRUCTION
B	12/01/17	PER CLIENT REVIEW
A	11/09/17	90% CONSTRUCTION

IT IS A VIOLATION OF LAW FOR ANY PERSON, UNLESS THEY ARE ACTING UNDER THE DIRECTION OF A LICENSED PROFESSIONAL ENGINEER, TO ALTER THIS DOCUMENT.

SITE ID: HBNPB 27A
1055 EL CAMINO DR
COSTA MESA, CA, 92626

SHEET TITLE
ELECTRICAL DETAILS

SHEET NUMBER
E-1

AT&T Mobility
Small Cell Project
Site Name: CRAN_RLOS_HBNPB_028

Background

AT&T Mobility (AT&T) mission is to connect people with their world everywhere they live, work and play. AT&T delivers advance mobile services, high speed internet and smart solutions for people and business. AT&T is the global leader in Technology, Media and Telecommunications industry and is committed to the development, growth and improvement of communications in the United States. AT&T is a nationwide wireless service provider located throughout the United States and in U.S. territories. Millions of wireless connections take advantage of the company's mobile products and services. AT&T is committed to improve the customer experience of their hand-held devices, portable computing, and connected automobiles. The company's commitment is to have a robust network of cell sites that could bring faster data speeds and voice connectivity.

AT&T Mobility is a Telephone Corporation registered with the California Public Utilities Commission. The CPUC registration number is U 3060 C. As a Telephone Corporation, AT&T has a legal right to access public right of way under Section 7901 of the California Public Utilities Code.

Mobile Wireless Services

Traditional macro sites are the fundamental building blocks needed for the provision of wireless voice services and high-speed mobile internet. AT&T uses high-band and low-band spectrum to provide wireless service. Each spectrum band has different propagation characteristics, which may experience varied noise or signal interference at a given location. To increase the service quality and reduce noise and interference to the customer, AT&T uses multiple layers of its licensed spectrum to bring its facilities closer to the end user. Signal interference created by environmental clutter or noise from surrounding sources, degrades the signal quality in a manner that affects data rates, service quality, and ultimately coverage. Placing facilities closer to the end user creates smaller coverage cells that produce faster data rates and produces a more efficient use of the limited spectrum.

Adding macro sites has been the typical design solution to increase coverage, capacity and to off-load existing cell sites in the network. This design alternative consists of multiple antennas mounted to a large support structure and a base station of several radio cabinets. The topography of a given area, dense concentration of buildings, the lack of available real estate, the high construction costs and other environmental factors has made it more difficult to bring wireless services closer to the end user in order to reduce weak signals and noise interference, and to increase the data rates which support existing and future demands for optimal user experience of mobile devices.

AT&T solution to increase the densification of wireless signals and coverage capacity of its network in any given geographical area is the implementation of small cells within the public rights-of-way. Small cells are lightweight and low power antenna solutions designed to cover a radius of up to 1,500 feet. The typical configuration is a single omni directional antenna or a set of small antennas mounted to existing right-of-way infrastructure, including utility poles, replacement streetlights or other infrastructure. Remote radios are also used with the omni-directional antenna to connect the small cell to nearby macro locations or head-end stations via fiber connections. Small cell installations are non-intrusive to the local community and can easily blend-in with the natural urban or suburban landscape.

Project Description

AT&T engineers have identified several locations in Costa Mesa that require stronger signal densification in order to increase throughput rates and to meet the existing and future demands. These locations are shown on the enclosed Small Cell Network map, The map includes approximate coverage for each location shown in red circles and the special relationship from each other. Additional areas may be identified in the future as the engineers continue to monitor the network service quality and capacity.

The subject project is located at the intersection of Presido Drive and De Soto Avenue. AT&T proposes to install a 10-inch diameter omni-directional antenna and a 12-inch diameter shroud for the radios to be installed on a replaced SCE streetlight. The design is a complete antenna and radio concealment that will be compatible with the overall diameter of the replaced streetlight. The new installation will be painted gray to match the final aggregate light pole. The proposed installation is small in scale and will blend with the existing street landscape.

The project scope will consist of the following:

- Removal and replacement of a streetlight by SCE.
- Installation of a single omni-directional antenna.
- Installation of four remote radio units and raycap disconnect switch within a shroud.
- Installation of power and fiber handholds.

Plans depicting the project location, design, height and style with the new wireless antenna installation are enclosed. Photographic simulations showing the final antenna installation are also enclosed.

Construction and Maintenance

Construction of the proposed project will take approximately 30-days. All construction will be done in a manner that minimizes impact to residents and business in the area. Existing underground or overhead power and fiber connections will be used with minimal trenching. Directional boring will be used when deemed appropriate for each specific location.

Maintenance of the subject facility is minimal. The majority of the monitoring is done from AT&T's switching offices. If needed, a site visit to change any radio equipment will be coordinated with the existing utility providers and city.

Project Code Compliance

The subject project complies with the City of Costa Mesa Telecommunication Regulatory Ordinance in the Public Right-of-Way, Section 19-15 in the following ways:

1. The proposed wireless facility is a small cell installation to be placed on a replaced SCE streetlight in the public right-of-way.
2. The proposed facility is small in scale and is visually compatible with the surrounding development.
3. The project is allowed subject to the city's approval of a Minor Conditional Use Permit.
4. The proposed installation will not interfere with the use of the existing right-of-way. No ground mounted equipment is being proposed.
5. The proposed facility is a low powered antenna designed to work in conjunction with other small cell sites in the area and to off-load capacity from an existing macro facility. The installation will comply with applicable regulations of the Federal Communications Commission as demonstrated on the enclosed FCC Local Official Guide to RF – Appendix A.
6. As stated in the project description, the purpose for the deployment of small cells is to increase the signal quality and capacity to the identified area near the site. As such, implementation of the small cell project will reduce a data signal gap that currently existing at this location.
7. The applicant will conform to all City of Costa Mesa requirements.

EDISON
CARRIER SOLUTIONS℠
A Division of SOUTHERN CALIFORNIA EDISON℠

Brian P. Ryan
Principle Manager
Telephone: 909-274-1949
Brian.Ryan@sce.com

March 1, 2018

To Whom It May Concern:

Since 1994, Southern California Edison (SCE) has assisted wireless service providers in expanding their networks to meet customers' needs for telecommunications service. SCE makes available existing structures that can be used to co-locate the wireless service providers' equipment, while lessening the visual impacts on the community and constituency that is served. This letter requests that you help us in this endeavor.

In an effort to minimize the potential clutter that new vertical structures would produce, many California jurisdictions have adopted ordinances and policies encouraging wireless facilities to be mounted on street light poles within the public rights of way.

As you are aware, SCE owns and maintains street light poles in your jurisdiction pursuant to our LS-1 tariff. In order to accommodate the increasing demand for micro-cell site locations, SCE has agreed to allow wireless service providers to attach their antennas to some of these streetlight poles, and contractually requires the wireless service provider to comply with certain requirements, including a requirement that the facility will not impact SCE's ability to provide street lighting service.

Costa Mesa has and retains full control over the entitlement and permitting process for these and future sites. The wireless service providers also pay for electrical usage resulting from their sites. This electrical service is metered and billed separately, and the Jurisdiction is not impacted.

While SCE believes this approach benefits local governments as well as their constituency, we would not engage in this solution if doing so resulted in extra costs to SCE or Costa Mesa. We would therefore appreciate confirmation that Costa Mesa consents to use of its public rights of way for the purpose of licensing space on an SCE Streetlight Pole # **1410546E** located at: **981 Presidio Drive**. **AT&T** Site number:
SCL HBNPB 028
PTN# 3551A0DQGM
FA# 14345606.

Please sign this letter to indicate your consent and return it to me at the below address. If you have any questions, please feel free to call Alexandra Martin (714) 323-5951.

Regards,

Brian P. Ryan

Signature _____

Name _____

Title _____

Date: _____

SCE Edison Carrier Solutions
2 Innovation Way 1st Floor
Pomona, CA 91768

EDISON
CARRIER SOLUTIONS℠
A Division of SOUTHERN CALIFORNIA EDISON℠

Brian Ryan
Principal Manager Telecom Sales
Edison Carrier Solutions
e-mail: Brian.Ryan@sce.com

March 1, 2018

Costa Mesa Planning / Permitting Department

To Whom It May Concern:

Re: Letter of Authorization

SCE streetlight identified as – SCE Streetlight Pole # **1410546E** located adjacent: **981 Presidio Drive**. **AT&T** Site Name: **SCL HBNPB 028**
PTN# 3551A0DQGM
FA# 14345606.

Southern California Edison Company (SCE) is the owner of the Light Pole, located in Costa Mesa, CA. AT&T "Carrier" has requested that SCE replace the existing Light Pole so that it can be used for operating a wireless communications facility, ("Site").

SCE has reviewed Carrier's preliminary plans for this Site and believe these plans are compatible with SCE's use of this Light Pole. Thus, as a representative of SCE, I hereby authorize Carrier, and its representatives, to seek and secure all right(s), including any environmental review associated with granting such rights, that are needed from the Jurisdiction to use the Light Pole and other property for this purpose as long as there are no costs to SCE.

Notwithstanding this authorization, SCE reserves the right to reject Carrier's request for use of its Light Pole for any reason, including imposed conditions or required changes to the light pole by the Jurisdiction, are unacceptable to SCE.

All correspondence and/or notices regarding use of SCE's Light Pole by Carrier, or any later requests by the Carrier for authorizations or approvals needed for construction, operation or maintenance of an approved Site, should include a copy to SCE.

If you have any questions concerning this project, please contact Alexandra Martin 714-323-5951.

Sincerely,

Brian P. Ryan

2 Innovation Way, 1st Floor
Pomona, CA 91768

PLEASE TRANSFER LETTER TO CITY LETTERHEAD

Date

Brian Ryan
Southern California Edison
Carrier Solutions Division
2 Innovation Way 1st Floor
Pomona, Ca 91768

Dear Mr. Ryan:

This letter authorizes Southern California Edison (SCE) to disconnect the SCE streetlight identified as – SCE Streetlight Pole **#1410546E** located adjacent: **981 Presidio Drive**. **AT&T** Site number: **SCL HBNPB 028**
PTN# 3551A0DQGM
FA# 14345606 so that work can be performed to replace the existing Streetlight.

AT&T (Wireless Carrier) has requested that SCE replace the Southern California Edison streetlight with a new streetlight that will be used for operating the wireless communications facility identified as SCE Light Pole **#1410546E** located adjacent: 981 Presidio Drive. **AT&T** Site number: **SCL HBNPB 028**
PTN# 3551A0DQGM
FA# 14345606.

Please coordinate the disconnecting of the streetlight directly with Costa Mesa, (please provide County Contact Name, Phone) so that the light will be out only for the above referenced work to be completed.

If you have any questions, please do not hesitate to call me.

Sincerely,

Name
Public Agency

SOUTHERN CALIFORNIA EDISON STREETLIGHT AUTHORIZATION

DEVELOPER/APPLICANT MUST PROVIDE THIS FORM
COMPLETED BY THE PUBLIC AUTHORITY
FOR ANY SCE-OWNED STREETLIGHT INSTALLATION, REMOVAL OR CHANGE REQUESTS
Incomplete forms will be returned and not processed

PUBLIC AUTHORITY NAME: City of Costa Mesa

Builder/Developer Name: AT&T / Ericsson **Phone #:** (281) 995-3829

Tract/Ref # leave blank **Streetlight Location** Pole #1410546E, 981 Presido Drive, HBNPB_28A

Please Check one: ☐ **Installation** ☐ **Removal** ☑ **Change**

Number of Lamp(s)	Lamp Size	Lamp Type
1	70 Watts	Sodium Vapor

New Installations
Public Authority Responsibility for Streetlight Monthly Billing
Please Check one and fill out applicable dates:

____**Upon Energizing**
☐ **If Public Authority is collecting Builder/Developer Advanced Energy Payment, indicate date collected. (_____)**

Monthly Billing: ____**Establish new Service Account (SA)** **Use existing SA #**_____

____ **Commitment Date-**
Date Agreed upon by SCE and Public Authority (_____) or no later than 36 months from first streetlight energized whichever is earlier.

Monthly Billing: ____**Establish new Service Account (SA)** **Use existing SA #**_____

x ___**Public Authority is not responsible**
____**HOA Area** **Name**_____ **Other Entity (please define)** AT&T

Public Authority Notes:
Please notify Mohcine Chirar at (714) 754-5140 when scheduling disconnect of existing streetlight.

0 day outage requested; City of Costa Mesa retains responsibility for LS-1 lighting electrical payment; AT&Tcovers costs of pole replacement

Authorized Public Authority Agent

_____ _____ _____
Print name **Date** **Signature**

Phone #_____ _____
Title

TO BE COMPLETED BY SCE
ACTION: ENTER TRACT/REF# ON DM PROGRAM NAME FIELD.

District _____ **Planning AOR**_____ _____ **PLANNER NAME (PRINT)**

DM SR # _____ **Product #**_____ **(one per SLA)**

FORWARD COMPLETED COPIES OF THE SLA FORM, MAP AND CSD272 CONTRACT, IF APPLICABLE TO:
"Street & Outdoor Lighting Organization" Santa Ana Bldg. D

Radio Frequency – Electromagnetic Energy (RF-EME) Compliance Report

Analysis Completed For:
Site No. CRAN_RLOS_HBNPB_020
MRLOS045170
HBNPB 20B
3590 Harbor Gateway North
Costa Mesa, California 92626
Orange County
33.701857; -117.923339 NAD83
Utility Pole

Note that these results can also be applied to other Costa Mesa locations using the same antenna and power configurations with a greater than or equal to antenna radiation center.

The proposed AT&T installation will be in compliance with FCC regulations upon proper installation of recommended signage.

EBI Project No. 6218004289
June 19, 2018

Prepared for:

AT&T Mobility, LLC
100 West Alondra Boulevard
Gardena, California 90248

Prepared by:

EBI Consulting
environmental | engineering | due diligence

TABLE OF CONTENTS

EXECUTIVE SUMMARY 1
1.0 FEDERAL COMMUNICATIONS COMMISSION (FCC) REQUIREMENTS 3
2.0 AT&T RF EXPOSURE POLICY REQUIREMENTS 5
3.0 WORST-CASE PREDICTIVE MODELING 6
4.0 RECOMMENDED SIGNAGE/COMPLIANCE PLAN 7
5.0 SUMMARY AND CONCLUSIONS 8
6.0 LIMITATIONS 8

APPENDICES

Appendix A Personnel Certifications
Appendix B Compliance/Signage Plan

EXECUTIVE SUMMARY

Purpose of Report

EnviroBusiness Inc. (dba EBI Consulting) has been contracted by AT&T Mobility, LLC to conduct radio frequency electromagnetic (RF-EME) modeling for AT&T Site CRAN_RLOS_HBNPB_020 located at 3590 Harbor Gateway North in Costa Mesa, California to determine RF-EME exposure levels from proposed AT&T wireless communications equipment at this site. As described in greater detail in Section 1.0 of this report, the Federal Communications Commission (FCC) has developed Maximum Permissible Exposure (MPE) Limits for general public exposures and occupational exposures. This report summarizes the results of RF-EME modeling in relation to relevant FCC RF-EME compliance standards for limiting human exposure to RF-EME fields.

This report contains a detailed summary of the RF EME analysis for the site, including the following:

- Site Plan with antenna locations
- Graphical representation of theoretical MPE fields based on modeling
- Graphical representation of recommended signage and/or barriers

This document addresses the compliance of AT&T's transmitting facilities independently and in relation to all collocated facilities at the site.

Statement of Compliance

A site is considered out of compliance with FCC regulations if there are areas that exceed the FCC exposure limits <u>and</u> there are no RF hazard mitigation measures in place. Any carrier which has an installation that contributes more than 5% of the applicable MPE must participate in mitigating these RF hazards.

As presented in the sections below, based on worst-case predictive modeling, there are no modeled exposures on any accessible utility line level and ground walking/working surface related to ATT's proposed antennas that exceed the FCC's occupational and/or general public exposure limits at this site.

As such, the proposed AT&T installation is in compliance with FCC regulations upon proper installation of recommended signage and/or barriers.

AT&T Recommended Signage/Compliance Plan

AT&T's RF Exposure: Responsibilities, Procedures & Guidelines document, dated October 28, 2014, requires that:

1. All sites must be analyzed for RF exposure compliance;
2. All sites must have that analysis documented; and
3. All sites must have any necessary signage and barriers installed.

Site compliance recommendations have been developed based upon protocols presented in AT&T's RF Exposure: Responsibilities, Procedures & Guidelines document, dated October 28, 2014, additional guidance provided by AT&T, EBI's understanding of FCC and OSHA requirements, and common industry practice. Barrier locations have been identified (when required) based on guidance presented in AT&T's RF Exposure: Responsibilities, Procedures & Guidelines document, dated October 28, 2014.

The following signage is recommended at this site:

- Blue NOTICE decals posted around the bottom of the radome of the antenna.

The signage proposed for installation at this site complies with AT&T's RF Exposure: Responsibilities, Procedures & Guidelines document and therefore complies with FCC and OSHA requirements. Barriers are not recommended on this site. More detailed information concerning site compliance recommendations is presented in Section 4.0 and Appendix B of this report.

1.0 FEDERAL COMMUNICATIONS COMMISSION (FCC) REQUIREMENTS

The FCC has established Maximum Permissible Exposure (MPE) limits for human exposure to Radiofrequency Electromagnetic (RF-EME) energy fields, based on exposure limits recommended by the National Council on Radiation Protection and Measurements (NCRP) and, over a wide range of frequencies, the exposure limits developed by the Institute of Electrical and Electronics Engineers, Inc. (IEEE) and adopted by the American National Standards Institute (ANSI) to replace the 1982 ANSI guidelines. Limits for localized absorption are based on recommendations of both ANSI/IEEE and NCRP.

The FCC guidelines incorporate two separate tiers of exposure limits that are based upon occupational/controlled exposure limits (for workers) and general public/uncontrolled exposure limits for members of the general public.

Occupational/controlled exposure limits apply to situations in which persons are exposed as a consequence of their employment and in which those persons who are exposed have been made fully aware of the potential for exposure and can exercise control over their exposure. Occupational/ controlled exposure limits also apply where exposure is of a transient nature as a result of incidental passage through a location where exposure levels may be above general public/uncontrolled limits (see below), as long as the exposed person has been made fully aware of the potential for exposure and can exercise control over his or her exposure by leaving the area or by some other appropriate means.

General public/uncontrolled exposure limits apply to situations in which the general public may be exposed or in which persons who are exposed as a consequence of their employment may not be made fully aware of the potential for exposure or cannot exercise control over their exposure. Therefore, members of the general public would always be considered under this category when exposure is not employment-related, for example, in the case of a telecommunications tower that exposes persons in a nearby residential area.

Table 1 and Figure 1 (below), which are included within the FCC's OET Bulletin 65, summarize the MPE limits for RF emissions. These limits are designed to provide a substantial margin of safety. They vary by frequency to take into account the different types of equipment that may be in operation at a particular facility and are "time-averaged" limits to reflect different durations resulting from controlled and uncontrolled exposures.

The FCC's MPEs are measured in terms of power (mW) over a unit surface area (cm^2). Known as the power density, the FCC has established an occupational MPE of 5 milliwatts per square centimeter (mW/cm^2) and an uncontrolled MPE of 1 mW/cm2 for equipment operating in the 1900 MHz frequency range. For the AT&T equipment operating at 850 MHz, the FCC's occupational MPE is 2.83 mW/cm^2 and an uncontrolled MPE of 0.57 mW/cm^2. For the AT&T equipment operating at 700 MHz, the FCC's occupational MPE is 2.33 mW/cm^2 and an uncontrolled MPE of 0.47 mW/cm^2. These limits are considered protective of these populations.

Table 1: Limits for Maximum Permissible Exposure (MPE)

(A) Limits for Occupational/Controlled Exposure

Frequency Range (MHz)	Electric Field Strength (E) (V/m)	Magnetic Field Strength (H) (A/m)	Power Density (S) (mW/cm^2)	Averaging Time $[E]^2$, $[H]^2$, or S (minutes)
0.3-3.0	614	1.63	(100)*	6
3.0-30	1842/f	4.89/f	($900/f^2$)*	6
30-300	61.4	0.163	1.0	6
300-1,500	--	--	f/300	6

Table 1: Limits for Maximum Permissible Exposure (MPE)				
(A) Limits for Occupational/Controlled Exposure				
Frequency Range (MHz)	**Electric Field Strength (E) (V/m)**	**Magnetic Field Strength (H) (A/m)**	**Power Density (S) (mW/cm^2)**	**Averaging Time $[E]^2$, $[H]^2$, or S (minutes)**
1,500-100,000	--	--	5	6
(B) Limits for General Public/Uncontrolled Exposure				
Frequency Range (MHz)	**Electric Field Strength (E) (V/m)**	**Magnetic Field Strength (H) (A/m)**	**Power Density (S) (mW/cm^2)**	**Averaging Time $[E]^2$, $[H]^2$, or S (minutes)**
0.3-1.34	614	1.63	(100)*	30
1.34-30	824/f	2.19/f	($180/f^2$)*	30
30-300	27.5	0.073	0.2	30
300-1,500	--	--	f/1,500	30
1,500-100,000	--	--	1.0	30

f = Frequency in (MHz)
* Plane-wave equivalent power density

Figure 1. FCC Limits for Maximum Permissible Exposure (MPE)
Plane-wave Equivalent Power Density

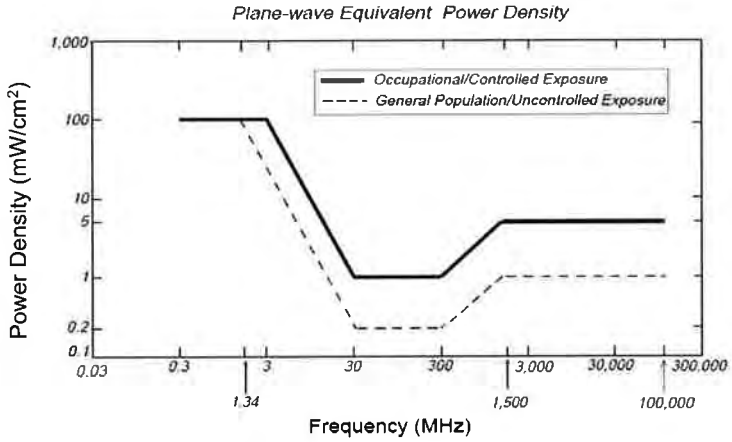

Based on the above, the most restrictive thresholds for exposures of unlimited duration to RF energy for several personal wireless services are summarized below:

Personal Wireless Service	Approximate Frequency	Occupational MPE	Public MPE
Personal Communication (PCS)	1,950 MHz	5.00 mW/cm^2	1.00 mW/cm^2
Cellular Telephone	870 MHz	2.90 mW/cm^2	0.58 mW/cm^2
Specialized Mobile Radio	855 MHz	2.85 mW/cm^2	0.57 mW/cm^2
Long Term Evolution (LTE)	700 MHz	2.33 mW/cm^2	0.47 mW/cm^2
Most Restrictive Freq. Range	30-300 MHz	1.00 mW/cm^2	0.20 mW/cm^2

MPE limits are designed to provide a substantial margin of safety. These limits apply for continuous exposures and are intended to provide a prudent margin of safety for all persons, regardless of age, gender, size, or health.

Personal Communication (PCS) facilities used by AT&T in this area operate within a frequency range of 700-1900 MHz. Facilities typically consist of: 1) electronic transceivers (the radios or cabinets) connected to wired telephone lines; and 2) antennas that send the wireless signals created by the transceivers to be received by individual subscriber units (PCS telephones). Transceivers are typically connected to antennas by coaxial cables.

Because of the short wavelength of PCS services, the antennas require line-of-site paths for good propagation, and are typically installed above ground level. Antennas are constructed to concentrate energy towards the horizon, with as little energy as possible scattered towards the ground or the sky. This design, combined with the low power of PCS facilities, generally results in no possibility for exposure to approach Maximum Permissible Exposure (MPE) levels, with the exception of areas directly in front of the antennas.

2.0 AT&T RF Exposure Policy Requirements

AT&T's RF Exposure: Responsibilities, Procedures & Guidelines document, dated October 28, 2014, requires that:

1. All sites must be analyzed for RF exposure compliance;
2. All sites must have that analysis documented; and
3. All sites must have any necessary signage and barriers installed.

Pursuant to this guidance, worst-case predictive modeling was performed for the site. This modeling is described below in Section 3.0. Lastly, based on the modeling and survey data, EBI has produced a Compliance Plan for this site that outlines the recommended signage and barriers. The recommended Compliance Plan for this site is described in Section 4.0.

3.0 WORST-CASE PREDICTIVE MODELING

In accordance with AT&T's RF Exposure policy, EBI performed theoretical modeling using RoofView® software to estimate the worst-case power density at the site utility line level and ground-level resulting from operation of the antennas. RoofView® is a widely-used predictive modeling program that has been developed by Richard Tell Associates to predict both near field and far field RF power density values for roof-top and tower telecommunications sites produced by vertical collinear antennas that are typically used in the cellular, PCS, paging and other communications services. The models utilize several operational specifications for different types of antennas to produce a plot of spatially-averaged power densities that can be expressed as a percentage of the applicable exposure limit.

For this report, EBI utilized antenna and power data provided by AT&T, and compared the resultant worst-case MPE levels to the FCC's occupational/controlled exposure limits outlined in OET Bulletin 65. For this report, EBI utilized antenna and power data provided by AT&T and compared the resultant worst-case MPE levels to the FCC's occupational/controlled exposure limits outlined in OET Bulletin 65. The assumptions used in the modeling are based upon information provided by AT&T and information gathered from other sources. There are no other wireless carriers with equipment installed at this site.

Based on worst-case predictive modeling, there are no modeled exposures on any accessible utility line level and ground walking/working surface related to ATT's proposed antennas that exceed the FCC's occupational and/or general public exposure limits at this site.

At the nearest walking/working surfaces to the AT&T antenna, the maximum power density generated by the AT&T antenna is approximately 57.10 percent of the FCC's general public limit (11.42 percent of the FCC's occupational limit). The composite exposure level from all carriers on this site is approximately 57.10 percent of the FCC's general public limit (11.42 percent of the FCC's occupational limit) at the nearest walking/working surface to each antenna. Based on worst-case predictive modeling, there are no areas at ground level related to the proposed AT&T antenna that exceed the FCC's occupational or general public exposure limits at this site. At ground level, the maximum power density generated by the antenna is approximately 1.00 percent of the FCC's general public limit (0.20 percent of the FCC's occupational limit).

A graphical representation of the RoofView® modeling results is presented in Appendix B. It should be noted that RoofView® is not suitable for modeling microwave dish antennas; however, these units are designed for point-to-point operations at the elevations of the installed equipment rather than ground-level coverage. Based on AT&T's RF Exposure: Responsibilities, Procedures & Guidelines document, dated October 28, 2014, microwave antennas are considered compliant if they are higher than 20 feet above any accessible walking/working surface. There are no microwaves installed at this site.

4.0 RECOMMENDED SIGNAGE/COMPLIANCE PLAN

Signs are the primary means for control of access to areas where RF exposure levels may potentially exceed the MPE. As presented in the AT&T guidance document, the signs must:

- Be posted at a conspicuous point;
- Be posted at the appropriate locations;
- Be readily visible; and
- Make the reader aware of the potential risks prior to entering the affected area.

The table below presents the signs that may be used for AT&T installations.

Informational Signs		Alerting Signs	
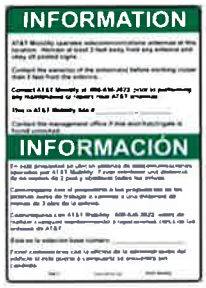	INFO 1	NOTICE 1	NOTICE 2
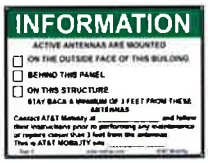	INFO 2	NOTICE DECAL	
at&t	INFO 3	CAUTION 1 – ROOFTOP	CAUTION 2 - ROOFTOP
	INFO 4	CAUTION - TOWER	WARNING

Based upon protocols presented in AT&T's RF Exposure: Responsibilities, Procedures & Guidelines document, dated October 28, 2014, and additional guidance provided by AT&T, the following signage is recommended on the site:

- Blue NOTICE decals posted around the bottom of the radome of the antenna.

No barriers are required for this site. The signage is graphically represented in the Signage Plan presented in Appendix B.

5.0 SUMMARY AND CONCLUSIONS

EBI has prepared this Radiofrequency Emissions Compliance Report for the proposed AT&T telecommunications equipment at the site located at 3590 Harbor Gateway North in Costa Mesa, California.

EBI has conducted theoretical modeling to estimate the worst-case power density from AT&T antennas to document potential MPE levels at this location and ensure that site control measures are adequate to meet FCC and OSHA requirements, as well as AT&T's corporate RF safety policies. As presented in the preceding sections, based on worst-case predictive modeling, there are no modeled exposures on any accessible utility line level and ground walking/working surface related to ATT's proposed antennas that exceed the FCC's occupational and/or general public exposure limits at this site.

Signage is recommended at the site as presented in Section 4.0 and Appendix B. Posting of the signage brings the site into compliance with FCC rules and regulations and AT&T's corporate RF safety policies.

6.0 LIMITATIONS

This report was prepared for the use of AT&T Mobility, LLC to meet requirements outlined in AT&T's corporate RF safety guidelines. It was performed in accordance with generally accepted practices of other consultants undertaking similar studies at the same time and in the same locale under like circumstances. The conclusions provided by EBI are based solely on the information provided by the client. The observations in this report are valid on the date of the investigation. Any additional information that becomes available concerning the site should be provided to EBI so that our conclusions may be revised and modified, if necessary. This report has been prepared in accordance with Standard Conditions for Engagement and authorized proposal, both of which are integral parts of this report. No other warranty, expressed or implied, is made.

Appendix A

Personnel Certifications

Reviewed and Approved by:

REGISTERED PROFESSIONAL ENGINEER
MICHAEL A. McGUIRE
E18898
EXP. 30 SEP 19
ELECTRICAL
STATE OF CALIFORNIA

sealed 6jun2018

Michael McGuire
Electrical Engineer

Note that EBI's scope of work is limited to an evaluation of the Radio Frequency – Electromagnetic Energy (RF-EME) field generated by the antennas and broadcast equipment noted in this report. The engineering and design of the structure, as well as the impact of the antennas and broadcast equipment on the structural integrity of the structure, are specifically excluded from EBI's scope of work.

Preparer Certification

I, Ryan Eaton, state that:

- I am an employee of EnviroBusiness Inc. (d/b/a EBI Consulting), which provides RF-EME safety and compliance services to the wireless communications industry.
- I have successfully completed RF-EME safety training, and I am aware of the potential hazards from RF-EME and would be classified "occupational" under the FCC regulations.
- I am familiar with the FCC rules and regulations as well as OSHA regulations both in general and as they apply to RF-EME exposure.
- I have been trained in on the procedures outlined in AT&T's RF Exposure: Responsibilities, Procedures & Guidelines document (dated October 28, 2014) and on RF-EME modeling using RoofView® modeling software.
- I have reviewed the data provided by the client and incorporated it into this Site Compliance Report such that the information contained in this report is true and accurate to the best of my knowledge.

Appendix B

Compliance/Signage Plan

At the nearest walking/working surfaces to the AT&T antenna, the maximum power density generated by the AT&T antenna is approximately 57.10 percent of the FCC's general public limit (11.42 percent of the FCC's occupational limit). The composite exposure level from all carriers on this site is approximately 57.10 percent of the FCC's general public limit (11.42 percent of the FCC's occupational limit) at the nearest walking/working surface to each antenna. Based on worst-case predictive modeling, there are no areas at ground level related to the proposed AT&T antenna that exceed the FCC's occupational or general public exposure limits at this site. At ground level, the maximum power density generated by the AT&T antenna is approximately 1.00 percent of the FCC's general public limit (0.20 percent of the FCC's occupational limit).

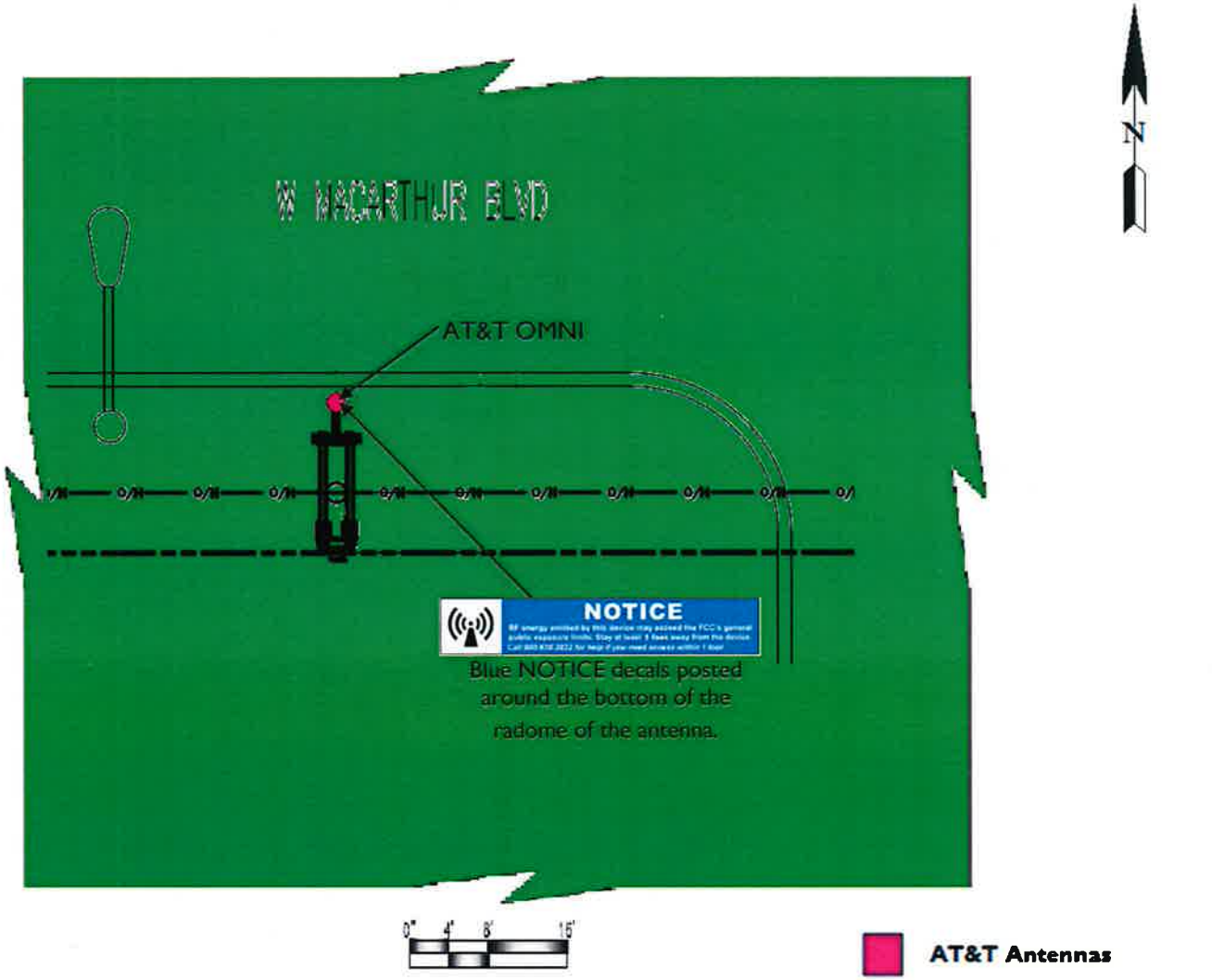

% FCC Public Exposure Limit
Exposure Level ≥ 5,000
500 < Exposure Level ≤ 5,000
100 < Exposure Level ≤ 500
Exposure Level ≤ 100

Sign Identification Legend			
	Denotes AT&T Information Sign 1		Denotes AT&T NOTICE Sign
	Denotes AT&T Information Sign 2		Denotes AT&T CAUTION Sign
	Denotes AT&T Information Sign 3		Denotes AT&T CAUTION Tower Sign
	Denotes AT&T Information Sign 4		Denotes AT&T WARNING Sign

Compliance/Signage Plan

Facility Operator: AT&T Mobility
Site Name: HBNPB 20B
AT&T Site Number: CRAN_RLOS_HBNPB_020
USID Number: 188431
Report Date: 06-19-18

EBI Consulting
environmental | engineering | due diligence

Statement of CLEC and CPUC Status

New Cingular Wireless PCS LLC ("NCW") dba AT&T Mobility is a telephone corporation that provides wireless service in the City of Costa Mesa pursuant to a Wireless Identification Registration Number, U 3060 C, issued by the California Public Utilities Commission. Section 7901 of the California Public Utilities Code authorizes telephone corporations to construct facilities in the public right of way. Thus, as a registered wireless carrier, NCW is allowed to construct facilities in the public right of way.

NCW does not have and is not required to have a Certificate of Public Convenience and Necessity (CPCN). The CPUC terminated the requirement for wireless carriers to have CPCNs in 1994 and replaced it with the registration process. Please see Section 1013 of the Cal. Pub. Util. Code and attached letter from CPUC.

Under Cal. Pub. Utils. Code §§ 7901 & 7901.1 (excerpted below), AT&T has an affirmative right to deploy its facilities in public right-of-way subject to the city's police power to control the location and manner of an installation. The city police power, however, is limited, and it must exercise this authority in a reasonable and nondiscriminatory manner. See 7901.1.

PUBLIC UTILITIES CODE SECTION 7901-7901.1

7901. Telegraph or telephone corporations may construct lines of telegraph or telephone lines along and upon any public road or highway, along or across any of the waters or lands within this State, and may erect poles, posts, piers, or abutments for supporting the insulators, wires, and other necessary fixtures of their lines, in such manner and at such points as not to incommode the public use of the road or highway or interrupt the navigation of the waters.

7901.1. (a) It is the intent of the Legislature, consistent with Section 7901, that municipalities shall have the right to exercise reasonable control as to the time, place, and manner in which roads, highways, and waterways are accessed.
(b) The control, to be reasonable, shall, at a minimum, be applied to all entities in an equivalent manner.
(c) Nothing in this section shall add to or subtract from any existing authority with respect to the imposition of fees by municipalities.

STATE OF CALIFORNIA

ARNOLD SCHWARZENEGGER, GOVERNOR

PUBLIC UTILITIES COMMISSION
505 VAN NESS AVENUE
SAN FRANCISCO, CA 94102-3298

To: CMSR Registration Applicant

Subject: Information Required to Obtain Wireless Identification Registration (WIR) Number (U Number).

Dear Applicant,

For your information, Commission Decision 94-10-031, (issued on October 12, 1994) established a wireless registration process for all Commercial Mobile Radiotelephone Services (CMRS) providers within California. The Commission has eliminated the Certificate of Public Necessity and Convenience (CPCN) for all CMRS providers. This policy change is a result of action by Congress in the Omnibus Budget Reconciliation Act of 1993, which removed states authority to regulate entry and rates of CMRS providers effective August 10, 1994.

In lieu of the CPCN, the Commission now requires CMRS providers who did not hold a CPCN prior to August 10, 1994, and who intend to offer intrastate wireless telecommunications services within California, to file a Wireless Identification Registration containing the following information concurrent with undertaking such service. This information must be on company letterhead, type of service to be offered, and signed by at least one officer of the company.

1. The legal name of the business offering such service.
2. Any fictitious or other names under which such service will be offered.
3. The local business address for the utility, if any.
4. The home office business address if different than the local business address.
5. The name and address of the designated agent for service of process.
6. Name, title, address, and telephone number of the person to be contacted regarding the reported information.
7. The identity of the directors and principal officers of the business.
8. Names of all affiliated companies and their relationship, indicating if the affiliate is a regulated public utility.
9. Telephone numbers to which service or other customer complaints should be directed.

The information should be filed with the Telecommunications Division. Service can be commenced upon receiving the WIN from the CPUC. You should receive a WIN within a few days after the Commission receives the registration information.

Within 30 days of a change in the status of any of the information items listed above, the carrier shall notify the Telecommunications Division of such change in writing.

If you have questions or need further clarification please call Rudy Sastra at (415) 703-2673.

Sincerely,

Jack Leutza, Director
Telecommunications Division

PLEASE SEND THIS INFORMATION TO:

Rudy Sastra
Carrier Branch
Telecommunications Division
California Public Utilities Commission
505 Van Ness Avenue
San Francisco, CA 94102
(415) 703-2673

CRAN_RLOS_HBNPB_028

981 Presido Drive
Costa Mesa, CA 92626

Location Map

Existing Site Conditions

Proposed Site Build

View 1

CRAN_RLOS_HBNPB_028

981 Presido Drive
Costa Mesa, CA 92626

Location Map

Existing Site Conditions

Proposed Site Build

View 2

CRAN_RLOS_HBNPB_028

981 Presido Drive
Costa Mesa, CA 92626

Location Map

Existing Site Conditions

Proposed Site Build

View 3

SITE NAME: HBNPB 28A
SITE NUMBER: CRAN_RLOS_HBNPB_028
PROJECT: CRAN/ SMALL CELL
USID: 188439
PACE: MRLOS045310

at&t

POLE TYPE: (N) CONCRETE LIGHT POLE
POLE ID #: 1410546E
SITE ADDRESS: 981 PRESIDIO DR, COSTA MESA, CA 92626

MINOR CONDITIONAL USE PERMIT
ADMINISTRATIVE ADJUSTMENT NO. ZA-15-15
Approval in Concept
SUBJECT TO CONDITIONS
CITY OF COSTA MESA
PLANNING DEPT.
BY JWA DATE 12/05/15

APPROVALS

THE FOLLOWING PARTIES HEREBY APPROVE AND ACCEPT THESE DOCUMENTS & AUTHORIZE THE SUBCONTRACTOR TO PROCEED WITH THE CONSTRUCTION DESCRIBED HEREIN. ALL DOCUMENTS ARE SUBJECT TO REVIEW BY THE LOCAL BUILDING DEPARTMENT & MAY IMPOSE CHANGES OR MODIFICATIONS.

APPROVED BY:	INITIALS:	DATE:
AT&T RF ENGINEER:		
AT&T OPERATIONS:		
SITE ACQUISITION MANAGER:		
PROJECT MANAGER:		
ZONING VENDOR:		
LEASING VENDOR:		
CONSTRUCTION MANAGER:		
A/E MANAGER:		
PROPERTY OWNER:		
UTILITY MANAGER:		

PROJECT DESCRIPTION

AT&T PROPOSES TO INSTALL A NEW WIRELESS INSTALLATION LOCATED IN THE PUBLIC RIGHT OF WAY TO (N) CONCRETE LIGHT POLE.

THE SCOPE WILL CONSIST OF THE FOLLOWING:

* SCE TO REMOVE (1) EXISTING CONCRETE STREETLIGHT
* SCE TO INSTALL (1) 29'-3" CONCRETE STREETLIGHT
* AT&T TO INSTALL (4) NEW AT&T REMOTE RADIO UNITS
* AT&T TO INSTALL (1) NEW AT&T OMNI-DIRECTIONAL ANTENNA
* AT&T TO INSTALL (1) NEW AT&T 14" DIAMETER ANTENNA SHROUD
* AT&T TO INSTALL (1) NEW RAYCAP DISCONNECT
* AT&T TO INSTALL (1) NEW HANDHOLE

PROJECT SITE INFORMATION

PUBLIC/PRIVATE:	PUBLIC RIGHT-OF-WAY
ADDRESS:	981 PRESIDIO DR, COSTA MESA, CA 92626
APPLICANT:	AT&T
ADDRESS:	1452 EDINGER AVE TUSTIN, CA 92780
LATITUDE (NAD 83):	33.671746
LONGITUDE (NAD 83):	-117.899108
LAT/LONG TYPE:	NAD-83
GROUND ELEVATION (NAVD 88)	±47.01'
ADJACENT TO APN #:	141-555-06
JURISDICTION:	CITY OF COSTA MESA
CURRENT ZONING:	PUBLIC RIGHT OF WAY
PROPOSED USE:	UNMANNED TELECOMMUNICATIONS
POWER COMPANY:	SCE
ADDRESS:	1 INNOVATION WAY POMONA, CA 91768

PROJECT TEAM

PROJECT MANAGER:
M SQUARED WIRELESS
1387 CALLE AVANZADO
SAN CLEMENTE, CA 92673

SAC/ZONING/PERMITTING:
M SQUARED WIRELESS
1387 CALLE AVANZADO
SAN CLEMENTE, CA 92673

RF ENGINEER:
AT&T
1452 EDINGER AVE.
TUSTIN, CA 92618
CONTACT: KARLO DAVINAGRACIA
PHONE: (714) 566-7310
EMAIL: KD270J@ATT.COM

ENGINEER:
M SQUARED WIRELESS
1387 CALLE AVANZADO
SAN CLEMENTE, CA 92673

SENIOR TECHNICAL PROJECT MANAGER:
AT&T
1452 EDINGER AVE.
TUSTIN, CA 92618
CONTACT: OMAR MERE
PHONE: (562) 293-6429
EMAIL: OM5039@ATT.COM

AREA MAPS

VICINITY MAP

LOCATION MAP

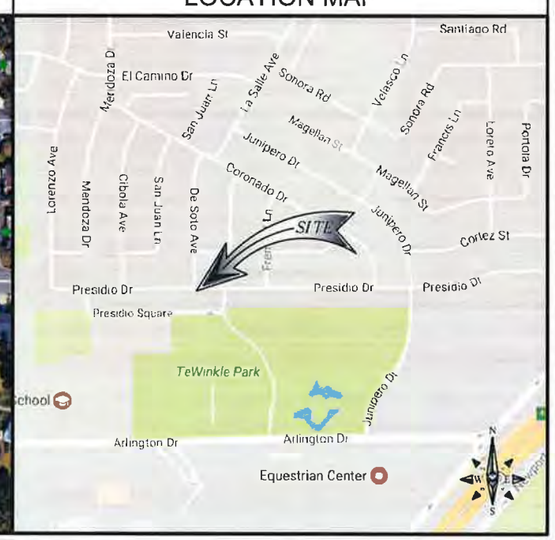

DRIVING DIRECTIONS

DIRECTIONS FROM AT&T OFFICE:

DIRECTION ARE TAKEN FROM
1452 EDINGER AVE.
TUSTIN, CA 92780

1. TURN LEFT ONTO EDINGER AVE
2. TURN LEFT ONTO 55 S
3. CONTINUE ONTO NEWPORT BLVD
4. CONTINUE ONTO W BALBOA BLVD
5. TURN RIGHT ONTO F ST

DESTINATION WILL BE ON THE LEFT.
981 PRESIDIO DR,
COSTA MESA, CA 92626

DIG ALERT

811

Dig Alert
Know what's below.
Call before you dig.

CALIFORNIA SOUTH
Call Two Working Days Before You Dig!
811 / 800-227-2600

DO NOT SCALE DRAWINGS

SUBCONTRACTOR SHALL VERIFY ALL PLANS & EXISTING DIMENSIONS & CONDITIONS ON THE JOB SITE & SHALL IMMEDIATELY NOTIFY THE ENGINEER IN WRITING OF ANY DISCREPANCIES BEFORE PROCEEDING WITH THE WORK OR BE RESPONSIBLE FOR SAME.

CONSTRUCTION DRAWING

IF USING 11"x17" PLOT, DRAWING WILL BE HALF SCALE

DRAWING INDEX

SHEET NO:	SHEET TITLE
T-1	TITLE SHEET
GN-1	GENERAL NOTES
A-1	SITE PLAN
A-2	ELEVATIONS
A-3	ELEVATIONS
A-4	SITE IMAGE
D-1	DETAILS
S-1	POLE DETAILS
S-2	POLE FOUNDATION DETAILS
E-1	ELECTRICAL DETAILS
TCP-1	TRAFFIC CONTROL NOTES
TCP-2	TRAFFIC CONTROL PLAN (PHASE 1)
TCP-3	TRAFFIC CONTROL PLAN (PHASE 2)
TCP-4	TRAFFIC CONTROL PLAN (PHASE 3)

CODE COMPLIANCE

ALL WORK AND MATERIALS SHALL BE PERFORMED AND INSTALLED IN ACCORDANCE WITH THE CURRENT EDITIONS OF THE FOLLOWING CODES AS ADOPTED BY THE LOCAL GOVERNING AUTHORITIES. NOTHING IN THESE PLANS IS TO BE CONSTRUCTED TO PERMIT WORK NOT CONFORMING TO THESE CODES.

1. 2016 CALIFORNIA ADMINISTRATIVE CODE
2. 2016 CALIFORNIA BUILDING CODE
3. 2016 CALIFORNIA ELECTRIC CODE
4. 2016 CALIFORNIA MECHANICAL CODE
5. 2016 CALIFORNIA PLUMBING CODE
6. 2016 CALIFORNIA FIRE CODE
7. ANY LOCAL BUILDING CODE AMENDMENTS TO THE ABOVE
8. CITY/COUNTY ORDINANCES

HANDICAP REQUIREMENTS:

FACILITY IS UNMANNED AND NOT FOR HUMAN HABITATION. HANDICAPPED ACCESS NOT REQUIRED IN ACCORDANCE WITH CALIFORNIA ADMINISTRATIVE STATE CODE PART 2, TITLE 24, CHAPTER 11B, SECTION 1103B.

GENERAL NOTES

THE FACILITY IS UNMANNED AND NOT FOR HUMAN HABITATION. A TECHNICIAN WILL VISIT THE SITE AS REQUIRED FOR ROUTINE MAINTENANCE. THE PROJECT WILL NOT RESULT IN ANY SIGNIFICANT DISTURBANCE OR EFFECT ON DRAINAGE: NO SANITARY SEWER SERVICE, POTABLE WATER, OR TRASH DISPOSAL IS REQUIRED AND NO COMMERCIAL SIGNAGE IS NEW.

at&t

ERICSSON
330 COMMERCE, STE. 200
IRVINE, CA 92602

M SQUARED WIRELESS
1387 CALLE AVANZADO
SAN CLEMENTE CA 92673 (949) 391-6924

DRAWN BY:	AMF
CHECKED BY:	MM

REV	DATE	DESCRIPTION
E	02/16/18	100% CONSTRUCTION
D	02/05/18	100% CONSTRUCTION
C	12/14/17	100% CONSTRUCTION
B	12/07/17	95% CONSTRUCTION
A	11/03/17	90% CONSTRUCTION

IT IS A VIOLATION OF LAW FOR ANY PERSON, UNLESS THEY ARE ACTING UNDER THE DIRECTION OF A LICENSED PROFESSIONAL ENGINEER, TO ALTER THIS DOCUMENT.

SITE ID: HBNPB 28A
981 PRESIDIO DR
COSTA MESA, CA, 92626

SHEET TITLE
TITLE SHEET

SHEET NUMBER
T-1

NEW ANTENNA	
EXISTING ANTENNA	
GROUND ROD	
GROUND BUS BAR	
MECHANICAL GRND. CONN.	
CADWELD	
GROUND ACCESS WELL	
ELECTRIC BOX	
TELEPHONE BOX	
LIGHT POLE	
FND. MONUMENT	
SPOT ELEVATION	
SET POINT	
REVISION	
GRID REFERENCE	
DETAIL REFERENCE	
ELEVATION REFERENCE	
SECTION REFERENCE	

	GROUT OR PLASTER
	(E) BRICK
	(E) MASONRY
	CONCRETE
	EARTH
	GRAVEL
	PLYWOOD
	SAND
	WOOD CONT.
	WOOD BLOCKING
	STEEL
	CENTERLINE
	PROPERTY/LEASE LINE
	MATCH LINE
	WORK POINT
	GROUND CONDUCTOR
A	COAXIAL CABLE
OU	OVERHEAD SERVICE CONDUCTORS
X	CHAIN LINK FENCING
	OVERHEAD TELEPHONE/OVERHEAD POWER
	OVERHEAD TELEPHONE LINE
	OVERHEAD POWER LINE
E	POWER RUN
F/P	FIBER/POWER RUN

T T	TELCO RUN
T/E	POWER/TELCO RUN
G G	GROUNDING CONDUCTOR
	GROUNDING CONDUCTOR
	CONDUIT UNDERGROUND
	FUSE, SIZE AND TYPE AS INDICATED.
	SAFETY SWITCH, 2P-240V-60A W/60A FUSES, NEMA 3R ENCLOSURE, SQ D CATALOG NO. H222NRB
	MANUAL TRANSFER SWITCH, 2P-240V-200A, NO FUSE, NEMA 3R ENCLOSURE
	LIGHTING FIXTURE, FLUORESCENT, 10.94" x 4'-0", 2/40W, SURFACE MOUNTING TYPE, HUBBELL LIGHTING CATALOG #WSW232T
	LIGHTING FIXTURE, FLUORESCENT, 10.94" x 8'-0", 2/95W, SURFACE MOUNTING TYPE, HUBBELL LIGHTING CATALOG #TWSM232T
	LIGHTING FIXTURE, HIGH PRESSURE SODIUM, 1/70W, WALL MOUNTING TYPE, HUBBELL LIGHTING CATALOG #NRG-307 OR 1/50W, HUBBELL LIGHTING CATALOG #NRG-121
	EXIT SIGN, THERMOPLASTIC LED, SINGLE FACE, UNIVERSAL MOUNTING, W/BATTERY PACK, HUBBELL LIGHTING CATALOG #PRB
EXIT	COMBINATION, EXIT SIGN & EMERGENCY LIGHTING, HUBBELL LIGHTING CATALOG #PRC
	EMERGENCY LIGHTING, 2/50W, HUBBELL LIGHTING CATALOG #HE6-50-2-R91
	LIGHTING FIXTURE, INCANDESCENT, 1/100W, WALL MOUNTING TYPE, HUBBELL LIGHTING CATALOG #BRH-100-06-1
	LIGHTING FIXTURE, HALOGEN, QUARTZ, 1/300W, HUBBELL LIGHTING CATALOG #QL-505
	LIGHTING FIXTURE, 1/175W. METAL HALIDE, HUBBELL CAT #MIC-0175H-336
	5/8" X 10'-0" ,CU. GND ROD 30" MIN. BELOW GRADE.

	5/8" X 10'-0" ,CU. GND ROD IN TEST WELL 30" MIN. BELOW GRADE.
	CHEMICAL GROUND ROD (XIT GROUND ROD)
	CADWELD CONNECTION
	MECHANICAL CONNECTION
	HALO GROUND CONNECTION
	CIRCUIT BREAKER
	UTILITY METER BASE
	TRANSFORMER
T	STEPDOWN TRANSFORMER
	RECEPTACLE, 2P-3W-125V-15A, DUPLEX, GROUND TYPE, HUBBEL CATALOG #5362
S	TOGGLE SWITCH, 1P-125V-15A, HUBBELL CATALOG #HBL 1201CN
S_{WP}	TOGGLE SWITCH, 1P-120V-15A, "WP"
S	IONIZATION SMOKE DETECTOR W/ALARM HORN & AUXILIARY CONTACT, 120 VAC, GENTEX PART NO. 7100F
	POLE
	(N) POLE MOUNTED XFMER
	(E) POLE MOUNTED XFMR
	(N) PAD MOUNTED XFMER
	(E) PAD MOUNTED XFMER

ABBREVIATIONS

1

A	AMPERE
A.B.	ANCHOR BOLT
ABV.	ABOVE
AC	ALTERNATE CURRENT/AIR CONDITIONER
ACCA	ANTENNA CABLE COVER ASSEMBLY
ADD'L.	ADDITIONAL
A.F.F.	ABOVE FINISHED FLOOR
A.F.G.	ABOVE FINISHED GRADE
AIC	AMPERE INTERRUPTING CAPACITY
ALUM.	ALUMINUM
ALT.	ALTERNATE
ANT.	ANTENNA
APPROX.	APPROXIMATE(LY)
ARCH.	ARCHITECT(URAL)
AT.	AMPERE TRIP
AWG.	AMERICAN WIRE GAUGE
BATT.	BATTERY
BD.	BOARD
BLDG.	BUILDING
BLK.	BLOCK
BLKG.	BLOCKING
BM.	BEAM
B.N.	BOUNDARY NAILING
BR.	BRANCH
BRKR.	BREAKER
BTCW.	BARE TINNED COPPER WIRE
BTS.	BASE TRANSMISSION SYSTEM
B.O.F.	BOTTOM OF FOOTING
B/U	BACK-UP CABINET
C	CONDUIT
CAB.	CABINET
CANT.	CANTILEVER(ED)
CB.	CIRCUIT BREAKER
CDMA	CODE-DIVISION MULTIPLE ACCESS (2G & 3G)
CDUK	CONSOLIDATION DISTRIBUTION UNIT KIT
C.I.P.	CAST IN PLACE
CKT.	CIRCUIT
CLG.	CEILING
CLR.	CLEAR
CMU	CONCRETE MASONRY UNIT (JAMB BLOCKS)
COL.	COLUMN
CONC.	CONCRETE
CONN.	CONNECTION(OR)
CONST.	CONSTRUCTION
CONT.	CONTINUOUS
d	PENNY (NAILS)
DBL.	DOUBLE
DC	DIRECT CURRENT
DEM.	DEMAND
DEPT.	DEPARTMENT
D.F.	DOUGLAS FIR
DIA.	DIAMETER
DIAG.	DIAGONAL
DIM.	DIMENSION
DWG.	DRAWING(S)
DWL.	DOWEL(S)
EA.	EACH
EGR.	EMERGENCY GENERATOR RECEPTACLE
EL.	ELEVATION
ELEC.	ELECTRICAL
ELEV.	ELEVATOR

EMT.	ELECTRICAL METALLIC TUBING
E.N.	EDGE NAIL
ENCL.	ENCLOSURE
ENG.	ENGINEER
EQ.	EQUAL
EXST.(E)	EXISTING
EXP.	EXPANSION
EXT.	EXTERIOR
FAB.	FABRICATION(OR)
FAC.	FACTOR
F/A	FIRE ALARM
F.F.	FINISH FLOOR
F.G.	FINISH GRADE
FIN.	FINISH(ED)
FLR.	FLOOR
FLUOR	FLUORESCENT
FDN.	FOUNDATION
F.O.C.	FACE OF CONCRETE
F.O.M.	FACE OF MASONRY
F.O.S.	FACE OF STUD
F.O.W.	FACE OF WALL
F.S.	FINISH SURFACE
FT.(')	FOOT (FEET)
FTG.	FOOTING
FU	FUSE
G	GROUND
GR	GROWTH (CABINET)
GA.	GAUGE
GEN.	GENERATOR
GI.	GALVANIZE(D)
G.F.C. I.	GROUND FAULT CIRCUIT INTERRUPTER
GLB. (GLU-LAM)	GLUE LAMINATED BEAM
GND	GROUND
GPS	GLOBAL POSITIONING SYSTEM
GRND.	GROUND
GSM	GLOBAL SYSTEM MOBILE (2G+ MOBILE TECH.)
HDBC	HARD DRAWN COPPER WIRE
HDR.	HEADER
HGR.	HANGER
HPS	HIGH PRESSURE SODIUM
HT.	HEIGHT
ICGB.	ISOLATED COPPER GROUND BUS
IN.(")	INCH(ES)
INT.	INTERIOR
LB.(#)	POUND(S)
L.B.	LAG BOLTS
L.F.	LINEAR FEET (FOOT)
LG.	LENGTH
L.	LONG(ITUDINAL)
LPS	LOW PRESSURE SODIUM
LTE	LONG TERM EVOLUTION (4G MOBILE TECH.)
MAS.	MASONRY
MAX.	MAXIMUM
M.B.	MACHINE BOLT
MECH.	MECHANICAL
MFR.	MANUFACTURER
MIN.	MINIMUM
MISC.	MISCELLANEOUS
MLO	MAIN LUGS ONLY

MTD.	MOUNTED
MTG.	MOUNTING
MTL.	METAL
MTS.	MANUAL TRANSFER SWITCH
N	NEUTRAL
(N)	NEW
NEMA	NATIONAL ELECTRICAL MANUFACTURERS ASSOC.
NO.(#)	NUMBER
N.T.S.	NOT TO SCALE
OBIF	OPTICAL BASEBAND INTERFACE
OH	OVERHEAD
O.C.	ON CENTER
OPNG.	OPENING
P	POLE
P/C	PRECAST CONCRETE
PCS	PERSONAL COMMUNICATION SERVICES
PH	PHASE
PLY.	PLYWOOD
PNLBD	PANELBOARD
PPC	POWER PROTECTION CABINET
PRC	PRIMARY RADIO CABINET
PRI	PRIMARY
P.S.F.	POUNDS PER SQUARE FOOT
P.S.I.	POUNDS PER SQUARE INCH
P.T.	PRESSURE TREATED
PWR.	POWER (CABINET)
QTY.	QUANTITY
RAD.(R)	RADIUS
RBS	RADIO BASE STATION (BASE STATION 3G NETWORKS)
RCPT.	RECEPTACLE
REF.	REFERENCE
REINF.	REINFORCEMENT(ING)
REQ'D.	REQUIRED
RGS.	RIGID GALVANIZED STEEL
RRU	REMOTE RADIO UNIT (RADIO TRANSCEIVER)
RX-AIT	RECEIVER AIR INTERFACE TRAY
SAF	SAFETY
SCH.	SCHEDULE
SDBC	SOFT DRAWN BARE COPPER
SEC	SECONDARY
SHT.	SHEET
SIM.	SIMILAR
S.N.	SOLID NEUTRAL
SPEC.	SPECIFICATION(S)
SQ.	SQUARE
S.S.	STAINLESS STEEL
STD.	STANDARD
STL.	STEEL
STRUC.	STRUCTURAL
SURF	SURFACE
SW	SWITCH
TEL.	TELEPHONE
TEMP.	TEMPORARY
THK.	THICK(NESS)
TMAS	TOWER MOUNTED AMPLIFIER (DC SUPPLY VOLTAGE)
T.N.	TOE NAIL
T.O.A.	TOP OF ANTENNA
T.O.C.	TOP OF CURB

T.O.F.	TOP OF FOUNDATION
T.O.P.	TOP OF PLATE (PARAPET)
T.O.S.	TOP OF STEEL
T.O.W.	TOP OF WALL
TYP.	TYPICAL
U.G.	UNDER GROUND
U.L.	UNDERWRITERS LABORATORY INC.
UMTS	UNIVERSAL MOBIL TECH. SYS. (3G MOBILE TECH.)
U.N.O.	UNLESS NOTED OTHERWISE
V	VOLT
VAC	VOLT ALTERNATING CURRENT
V.I.F.	VERIFY IN FIELD
W	WATT OR WIRE
WD	WIDE(WIDTH)
W/	WITH
W/O	WITHOUT
WD.	WOOD
W.P.	WEATHERPROOF
WT.	WEIGHT
XFER	TRANSFER
XFMR	TRANSFORMER
XLPE	CROSS-LINK POLYETHYLENE
℄	CENTERLINE
⅊	PLATE, PROPERTY LINE

ABBREVIATIONS

2

NOTES FOR EXISTING AT&T CELL SITES:

1. PRIOR TO THE SUBMISSION OF BIDS, THE BIDDING SUBCONTRACTOR SHALL VISIT THE CELL SITE TO FAMILIARIZE WITH THE EXISTING CONDITIONS AND TO CONFIRM THAT THE WORK CAN BE ACCOMPLISHED AS SHOWN ON THE CONSTRUCTION DRAWINGS. ANY DISCREPANCY FOUND SHALL BE BROUGHT TO THE ATTENTION OF CONTRACTOR.
2. SUBCONTRACTOR SHALL VERIFY ALL EXISTING DIMENSIONS AND CONDITIONS PRIOR TO COMMENCING ANY WORK. ALL DIMENSIONS OF EXISTING CONSTRUCTION SHOWN ON THE DRAWINGS MUST BE VERIFIED. SUBCONTRACTOR SHALL NOTIFY THE CONTRACTOR OF ANY DISCREPANCIES PRIOR TO ORDERING MATERIAL OR PROCEEDING WITH CONSTRUCTION.
3. THE EXISTING CELL SITE IS IN FULL COMMERCIAL OPERATION. ANY CONSTRUCTION WORK BY SUBCONTRACTOR SHALL NOT DISRUPT THE EXISTING NORMAL OPERATION. ANY WORK ON EXISTING EQUIPMENT MUST BE COORDINATED WITH CONTRACTOR. ALSO, WORK SHOULD BE SCHEDULED FOR AN APPROPRIATE MAINTENANCE WINDOW USUALLY IN LOW TRAFFIC PERIODS AFTER MIDNIGHT.
4. SINCE THE CELL SITE IS ACTIVE, ALL SAFETY PRECAUTIONS MUST BE TAKEN WHEN WORKING AROUND HIGH LEVELS OF ELECTROMAGNETIC RADIATION. EQUIPMENT SHOULD BE SHUTDOWN PRIOR TO PERFORMING ANY WORK THAT COULD EXPOSE THE WORKERS TO DANGER. PERSONAL RF EXPOSURE MONITORS ARE ADVISED TO BE WORN TO ALERT OF ANY DANGEROUS EXPOSURE LEVELS.
5. SUBCONTRACTOR SHALL DETERMINE ACTUAL ROUTING OF CONDUIT, POWER AND T1 CABLES, GROUNDING CABLES AS SHOWN ON THE POWER, GROUNDING AND TELCO PLAN DRAWING. SUBCONTRACTOR SHALL UTILIZE EXISTING TRAYS AND/OR SHALL ADD NEW TRAYS AS NECESSARY. SUBCONTRACTOR SHALL CONFIRM THE ACTUAL ROUTING WITH THE CONTRACTOR.
6. SUBCONTRACTOR SHALL LEGALLY AND PROPERLY DISPOSE OF ALL SCRAP MATERIALS SUCH AS COAXIAL CABLES AND OTHER ITEMS REMOVED FROM THE EXISTING FACILITY. ANTENNAS REMOVED SHALL BE RETURNED TO THE OWNER'S DESIGNATED LOCATION.

EXISTING AT&T CELL SITE NOTES

3

1. THE FACILITY IS AN UNOCCUPIED DIGITAL TELECOMMUNICATION FACILITY.
2. PLANS ARE NOT TO BE SCALED AND ARE INTENDED TO BE A DIAGRAMMATIC OUTLINE ONLY, UNLESS NOTED OTHERWISE. THE WORK SHALL INCLUDE FURNISHING MATERIALS, EQUIPMENT, APPURTENANCES AND LABOR NECESSARY TO COMPLETE ALL INSTALLATIONS AS INDICATED ON THE DRAWINGS.
3. PRIOR TO THE SUBMISSION OF BIDS, THE CONTRACTORS SHALL VISIT THE JOB SITE AND BE RESPONSIBLE FOR ALL CONTRACT DOCUMENTS, FIELD CONDITIONS AND DIMENSIONS, AND CONFIRMING THAT THE WORK MAY BE ACCOMPLISHED AS SHOWN PRIOR TO PROCEEDING WITH CONSTRUCTION. ANY DISCREPANCIES ARE TO BE BROUGHT TO THE ATTENTION OF THE IMPLEMENTATION ENGINEER AND ENGINEER PRIOR TO PROCEEDING WITH THE WORK.
4. THE CONTRACTOR SHALL OBTAIN, IN WRITING, AUTHORIZATION TO PROCEED BEFORE STARTING WORK ON ANY ITEM NOT CLEARLY DEFINED OR IDENTIFIED BY THE CONTRACT DOCUMENTS.
5. THE CONTRACTOR SHALL INSTALL ALL EQUIPMENT AND MATERIALS IN ACCORDANCE WITH MANUFACTURER'S RECOMMENDATIONS UNLESS SPECIFICALLY INDICATED OTHERWISE OR WHERE LOCAL CODES OR REGULATIONS TAKE PRECEDENCE.
6. ALL WORK PERFORMED AND MATERIALS INSTALLED SHALL BE IN STRICT ACCORDANCE WITH ALL APPLICABLE CODES, REGULATIONS AND ORDINANCES. CONTRACTOR SHALL GIVE ALL NOTICES AND COMPLY WITH ALL LAWS, ORDINANCES, RULES, REGULATIONS AND LAWFUL ORDERS OF ANY PUBLIC AUTHORITY REGARDING THE PERFORMANCE OF THE WORK. MECHANICAL AND ELECTRICAL SYSTEMS SHALL BE INSTALLED IN ACCORDANCE WITH ALL APPLICABLE MUNICIPAL AND UTILITY COMPANY SPECIFICATIONS, AND LOCAL AND STATE JURISDICTIONAL CODES, ORDINANCES AND APPLICABLE REGULATIONS.
7. THE GENERAL CONTRACTOR SHALL SUPERVISE AND DIRECT THE WORK, USING THE BEST SKILLS AND ATTENTION. THE CONTRACTOR SHALL BE SOLELY RESPONSIBLE FOR ALL CONSTRUCTION MEANS, METHODS, TECHNIQUES, SEQUENCES AND PROCEDURES AND FOR COORDINATING ALL PORTIONS OF THE WORK UNDER THE CONTRACT INCLUDING CONTACT AND COORDINATION WITH THE IMPLEMENTATION ENGINEER AND WITH THE LANDLORD'S AUTHORIZED REPRESENTATIVE.
8. SEAL PENETRATIONS THROUGH FIRE RATED AREAS WITH U.L. LISTED AND FIRE CODE APPROVED MATERIALS.
9. PROVIDE A PORTABLE FIRE EXTINGUISHER WITH A RATING OF NOT LESS THAN 2-A OR 2-A10BC WITHIN 75 FEET TRAVEL DISTANCE TO ALL PORTIONS OF THE PROJECT AREA DURING CONSTRUCTION.
10. DETAILS ARE INTENDED TO SHOW END RESULT OF DESIGN. MINOR MODIFICATIONS MAY BE REQUIRED TO SUIT JOB DIMENSIONS OR CONDITIONS, AND SUCH MODIFICATIONS SHALL BE INCLUDED AS PART OF THE WORK.
11. REPRESENTATIONS OF TRUE NORTH, OTHER THAN THOSE FOUND ON THE PLOT OF SURVEY DRAWING (SHEET LS1 OR SHEET C-1), SHALL NOT BE USED TO IDENTIFY OR ESTABLISH THE BEARING OF TRUE NORTH AT THE SITE. THE CONTRACTOR SHALL RELY SOLELY ON THE PLOT OF SURVEY DRAWING AND ANY SURVEYOR'S MARKINGS AT THE SITE FOR THE ESTABLISHMENT OF TRUE NORTH, AND SHALL NOTIFY THE ENGINEER PRIOR TO PROCEEDING WITH THE WORK IF ANY DISCREPANCY IS FOUND BETWEEN THE VARIOUS ELEMENTS OF THE WORKING DRAWINGS AND THE TRUE NORTH ORIENTATION AS DEPICTED ON THE CIVIL SURVEY. THE CONTRACTOR SHALL ASSUME SOLE LIABILITY FOR ANY FAILURE TO NOTIFY THE ENGINEER.
12. THE CONTRACTOR SHALL MAKE NECESSARY PROVISIONS TO PROTECT EXISTING IMPROVEMENTS, PAVING, CURBS, VEGETATION, GALVANIZED SURFACES, ETC., AND UPON COMPLETION OF WORK REPAIR ANY DAMAGE THAT OCCURRED DURING CONSTRUCTION TO THE SATISFACTION OF AT&T.
13. KEEP GENERAL AREA CLEAN, HAZARD FREE, AND DISPOSE OF ALL DIRT, DEBRIS, RUBBISH AND REMOVE EQUIPMENT NOT SPECIFIED AS REMAINING ON THE PROPERTY. LEAVE PREMISES IN CLEAN CONDITION AND FREE FROM PAINT SPOTS, DUST OR SMUDGES OF ANY NATURE.
14. PENETRATIONS OF ROOF MEMBRANES SHALL BE PATCHED/FLASHED AND MADE WATERTIGHT USING LIKE MATERIALS IN ACCORDANCE WITH NRCA ROOFING STANDARDS AND DETAILS. CONTRACTOR SHALL OBTAIN DETAILING CLARIFICATION FOR SITE-SPECIFIC CONDITIONS FROM ENGINEER, IF NECESSARY, BEFORE PROCEEDING.
15. BEFORE ORDERING AND/OR BEFORE FABRICATING/CONSTRUCTING/INSTALLING ANY ITEMS, VERIFY THE TYPES AND QUANTITIES.
16. CONTRACTOR SHALL PROVIDE SITE FOREMAN WITH A CELLULAR PHONE AND PAGER, AND KEEP SAME ON SITE WHENEVER PERSONNEL ARE ON SITE.
17. THE CONTRACTOR SHALL VERIFY ALL DIMENSIONS AND CONDITIONS ON THE SITE AND NOTIFY THE PROJECT MANAGER OF ANY DISCREPANCIES BEFORE STARTING ANY WORK.
18. CONTRACTOR TO PROVIDE COMPLETE SET OF AS BUILT DRAWINGS WITHIN 10 WORKING DAYS OF PROJECT COMPLETION.
19. CONTRACTOR IS TO EXCAVATE 6" BELOW EXISTING GRADE AND SPRAY WITH WEED CONTROL. REPLACE WITH CLASS II AGGREGATE BASE AND CRUSHED WASHED ROCK. AS SPECIFIED ON SITE PLAN.
20. CONTRACTOR SHALL PROVIDE TOILET FACILITY DURING ALL PHASES OF CONSTRUCTION.
21. PRIOR TO THE COMMENCEMENT OF CONSTRUCTION OR THE FABRICATION OF MATERIALS TO BE INSTALLED AT THE SITE, THE CONTRACTOR SHALL FIELD VERIFY ALL DIMENSIONS INCLUDING AS-BUILT DIMENSIONS OF EXISTING STRUCTURES OR STRUCTURAL ELEMENTS HAVING A BEARING ON THE SCOPE OF THE WORK TO BE PERFORMED. IF ANY DISCREPANCY IS FOUND BETWEEN THE VARIOUS ELEMENTS OF THE WORKING DRAWINGS AND THE DIMENSIONS OR CONDITIONS FOUND TO BE EXISTING IN THE FIELD, THE CONTRACTOR SHALL NOTIFY THE ENGINEER AND OBTAIN DESIGN RESOLUTION PRIOR TO PROCEEDING WITH THE PORTION(S) OF THE WORK AFFECTED. THE CONTRACTOR SHALL ASSUME SOLE LIABILITY FOR ANY FAILURE TO SO NOTIFY THE ENGINEER AND OBTAIN RESOLUTION BEFORE PROCEEDING.

GENERAL NOTES

4

at&t

ERICSSON
330 COMMERCE, STE. 200
IRVINE, CA 92602

M SQUARED WIRELESS
1357 CALLE AVANZADO
SAN CLEMENTE CA 92673 (949) 361-6634

DRAWN BY:	AMF
CHECKED BY:	MM

REV	DATE	DESCRIPTION
E	02/16/18	100% CONSTRUCTION
D	02/05/18	100% CONSTRUCTION
C	12/14/17	100% CONSTRUCTION
B	12/07/17	95% CONSTRUCTION
A	11/03/17	90% CONSTRUCTION

IT IS A VIOLATION OF LAW FOR ANY PERSON, UNLESS THEY ARE ACTING UNDER THE DIRECTION OF A LICENSED PROFESSIONAL ENGINEER TO ALTER THIS DOCUMENT

SITE ID: HBNPB 28A
981 PRESIDIO DR
COSTA MESA, CA, 92626

SHEET TITLE
GENERAL NOTES

SHEET NUMBER
GN-1

[redacted]

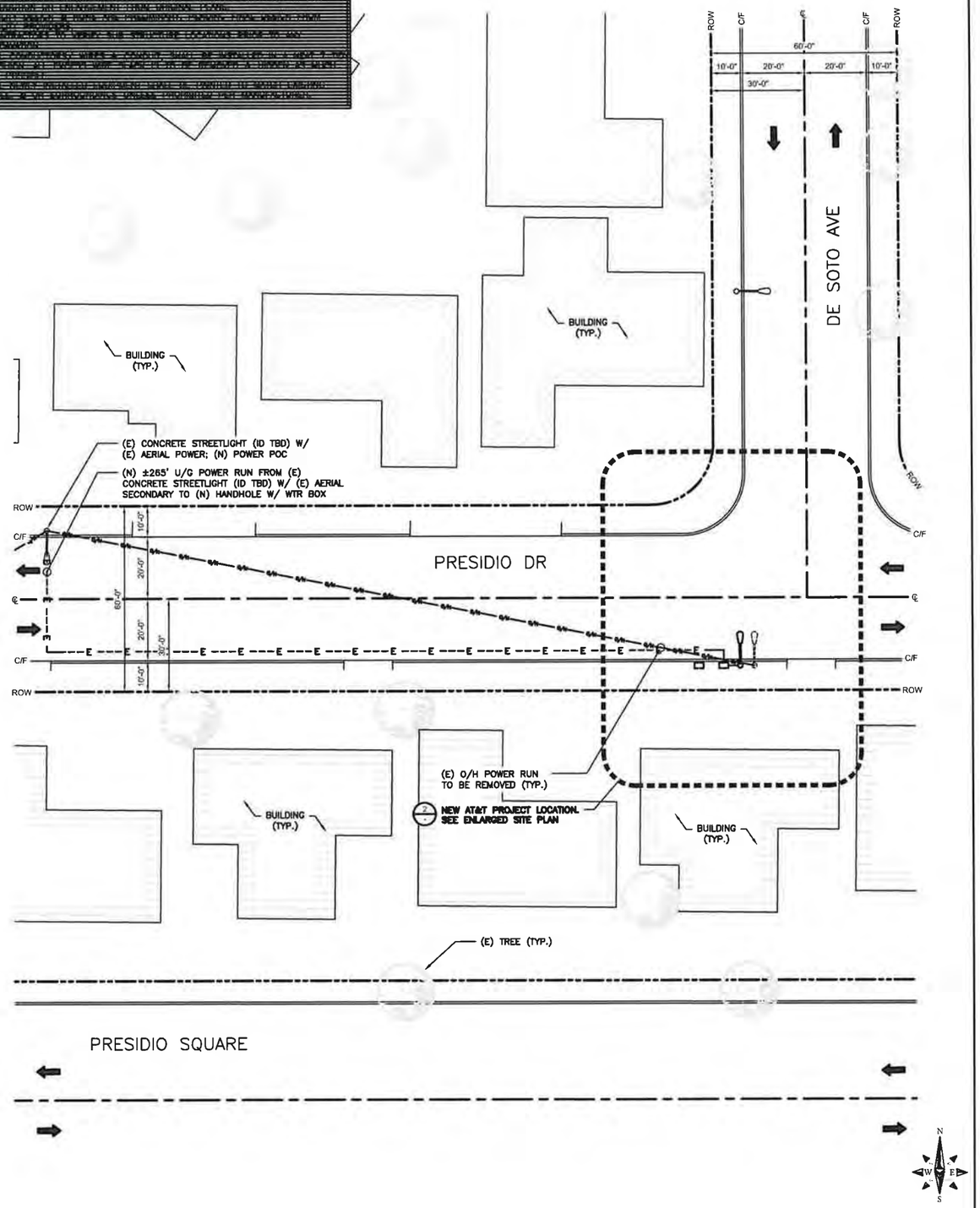

SITE PLAN

24"x36" SCALE: 1" = 20'-0"
11"x17" SCALE: 1" = 40'-0"
0" 10' 20' 40'

1

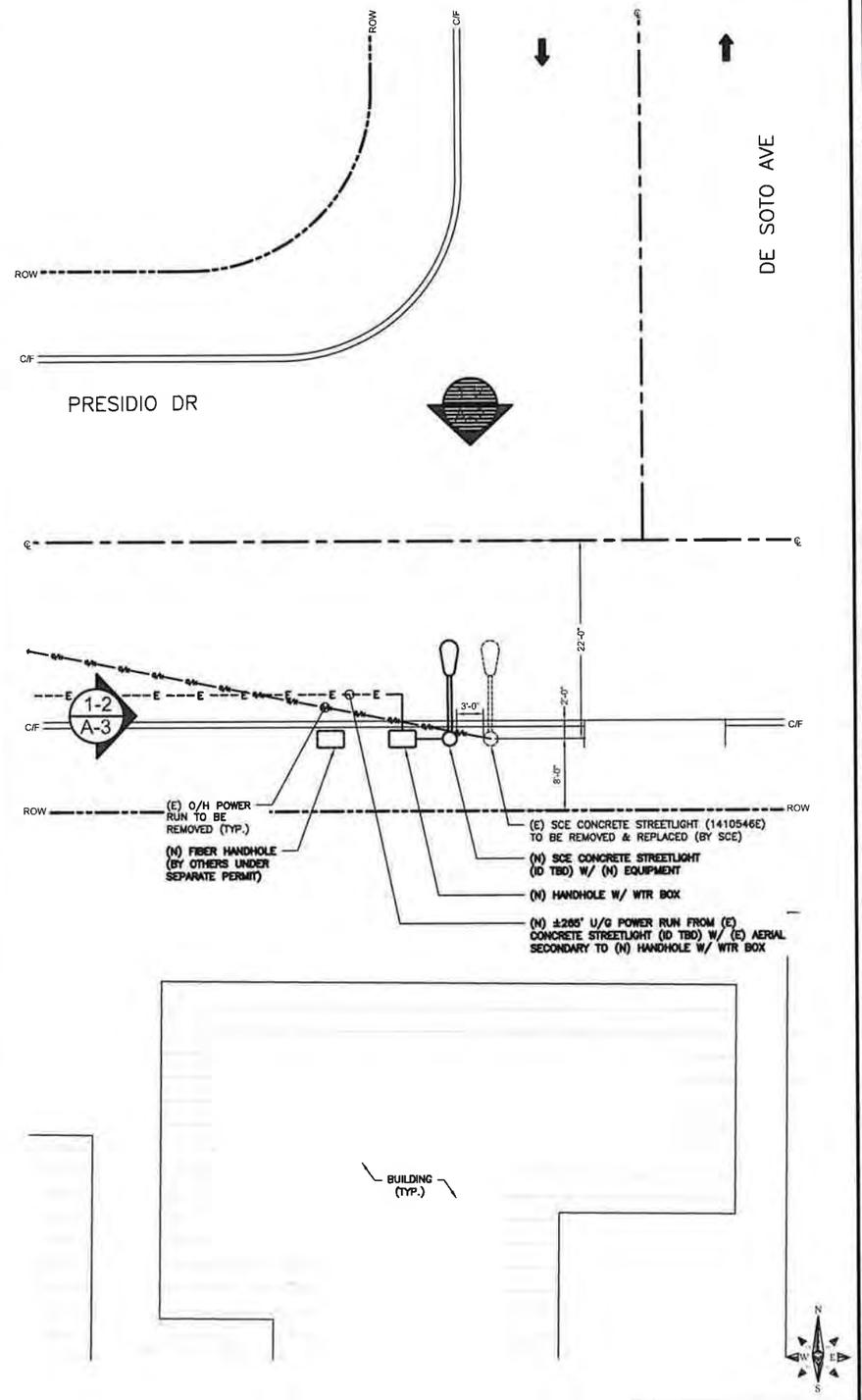

ENLARGED SITE PLAN

24"x36" SCALE: 1/8" = 1'-0"
11"x17" SCALE: 1/16" = 1'-0"
0" 4' 8' 16'

2

at&t

ERICSSON
330 COMMERCE, STE. 200
IRVINE, CA 92602

M SQUARED WIRELESS
1367 CALLE AVANZADO
SAN CLEMENTE CA 92673 (949) 391-9934

DRAWN BY:	AMF
CHECKED BY:	MM

REV	DATE	DESCRIPTION
E	02/16/18	100% CONSTRUCTION
D	02/05/18	100% CONSTRUCTION
C	12/14/17	100% CONSTRUCTION
B	12/07/17	95% CONSTRUCTION
A	11/03/17	90% CONSTRUCTION

IT IS A VIOLATION OF LAW FOR ANY PERSON, UNLESS THEY ARE ACTING UNDER THE DIRECTION OF A LICENSED PROFESSIONAL ENGINEER, TO ALTER THIS DOCUMENT.

SITE ID: HBNPB 28A
981 PRESIDIO DR
COSTA MESA, CA, 92626

SHEET TITLE
SITE PLAN

SHEET NUMBER
A-1

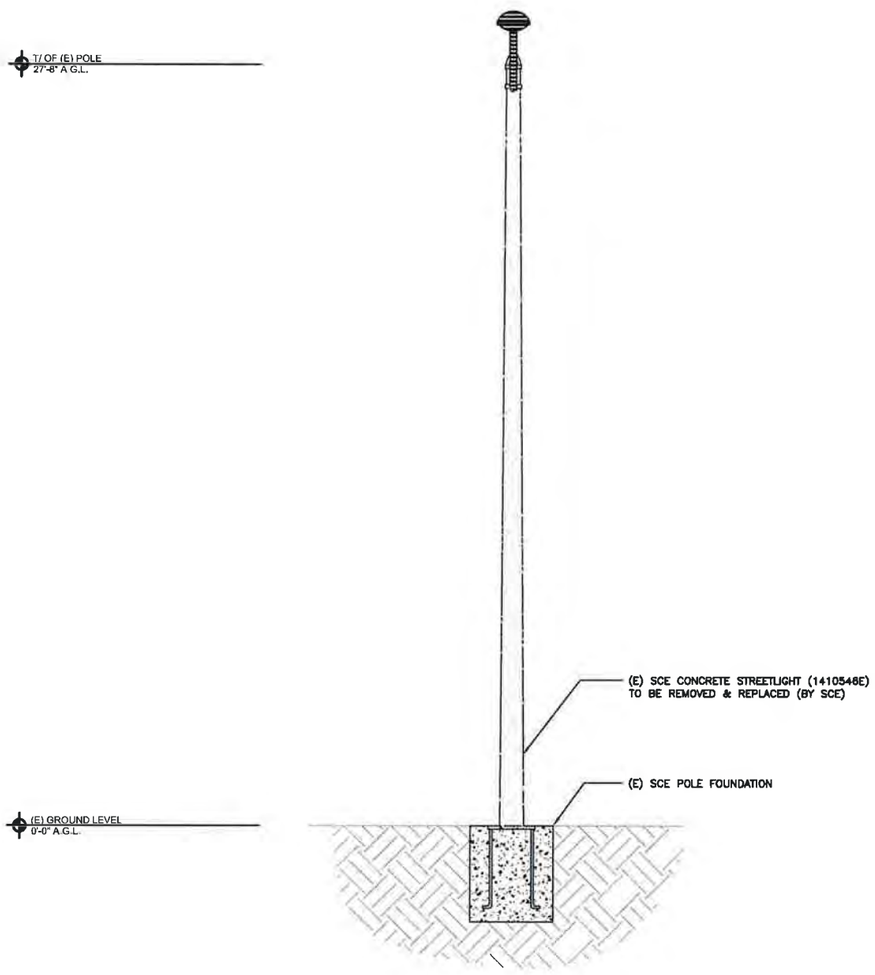

EXISTING SOUTH ELEVATION

24"x36" SCALE: 3/8" = 1'-0"
11"x17" SCALE: 3/16" = 1'-0"

0" 1' 2' 4'

2

NOTE:
ALL NEW EQUIPMENT SHALL BE PAINTED TO MATCH NEW POLE

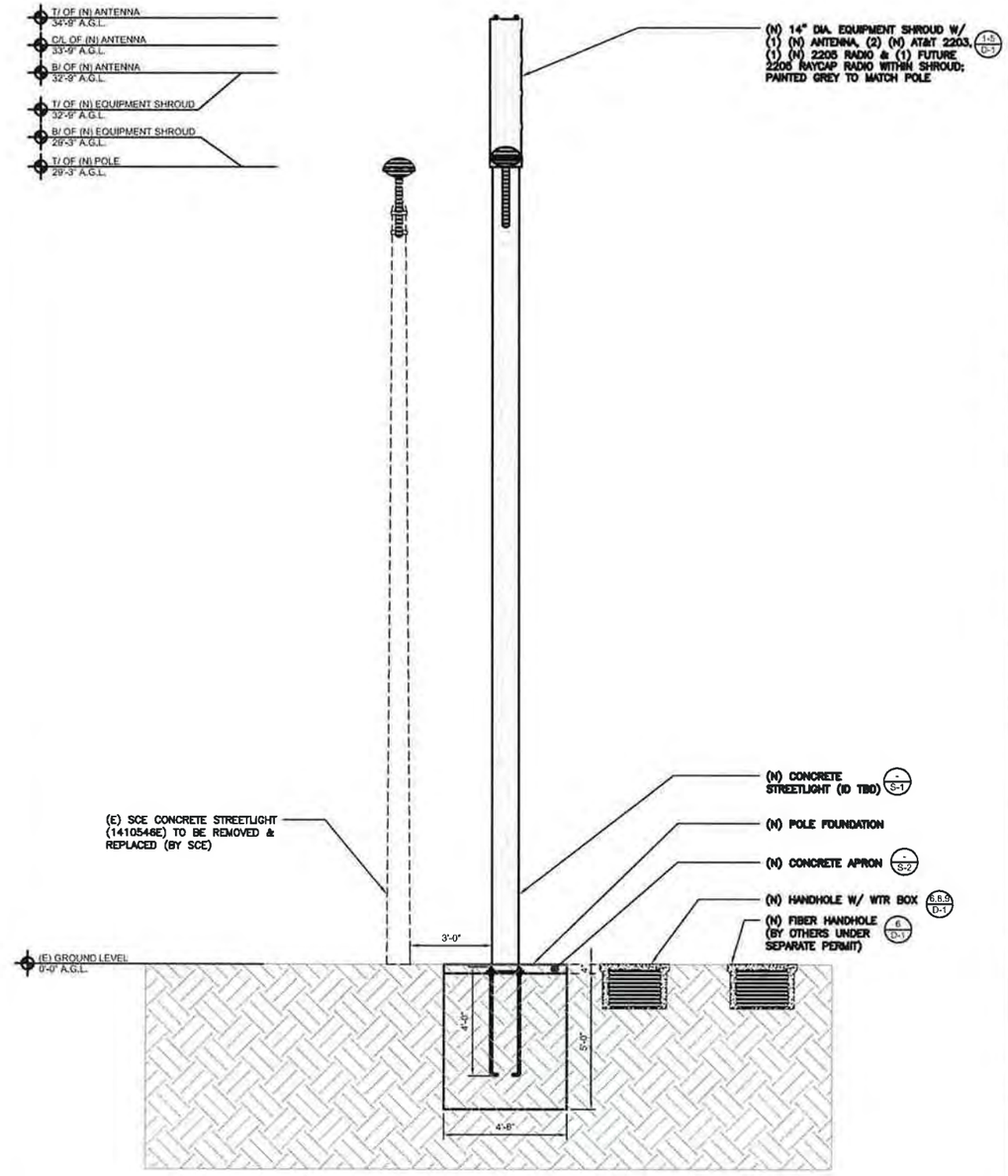

NEW SOUTH ELEVATION

24"x36" SCALE: 3/8" = 1'-0"
11"x17" SCALE: 3/16" = 1'-0"

0" 1' 2' 4'

1

at&t

ERICSSON
330 COMMERCE, STE. 200
IRVINE, CA 92602

M SQUARED WIRELESS
1367 CALLE AVANZADO
SAN CLEMENTE CA 92673 (949) 551-6024

DRAWN BY:	AMF
CHECKED BY:	MM

REV	DATE	DESCRIPTION
E	02/16/18	100% CONSTRUCTION
D	02/05/18	100% CONSTRUCTION
C	12/14/17	100% CONSTRUCTION
B	12/07/17	95% CONSTRUCTION
A	11/03/17	90% CONSTRUCTION

IT IS A VIOLATION OF LAW FOR ANY PERSON, UNLESS THEY ARE ACTING UNDER THE DIRECTION OF A LICENSED PROFESSIONAL ENGINEER, TO ALTER THIS DOCUMENT.

SITE ID: HBNPB 28A
981 PRESIDIO DR
COSTA MESA, CA, 92626

SHEET TITLE
ELEVATIONS

SHEET NUMBER
A-2

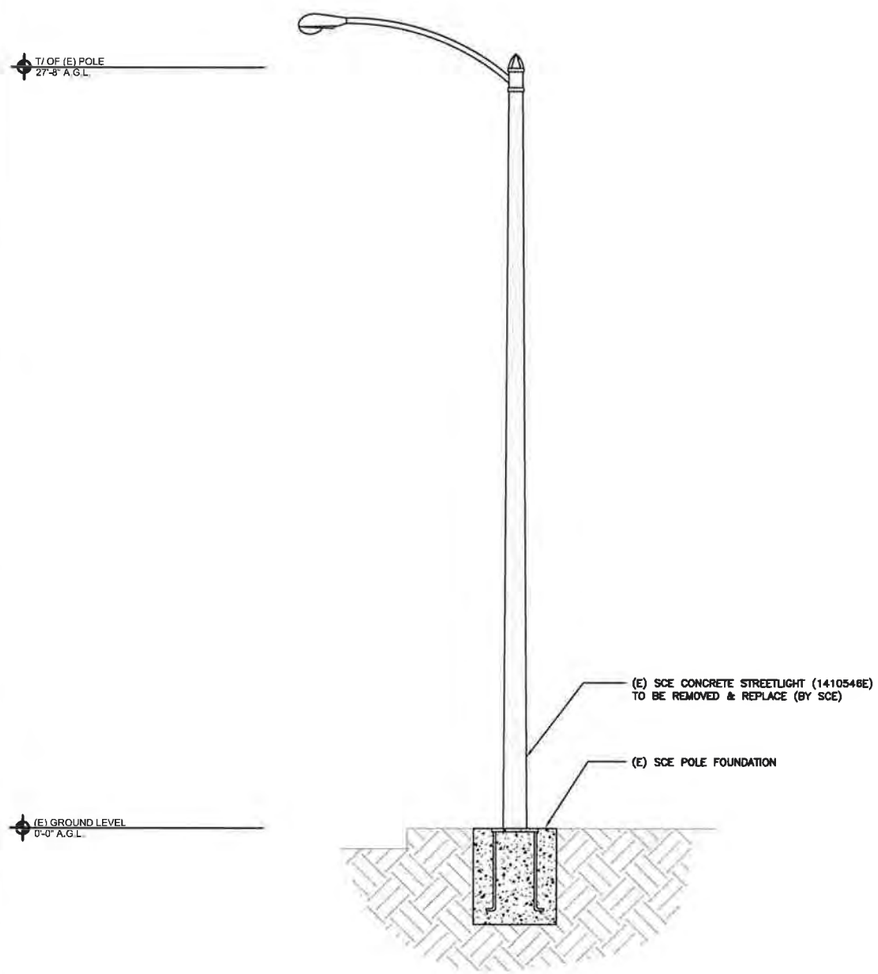

EXISTING WEST ELEVATION

24"x36" SCALE: 3/8" = 1'-0"
11"x17" SCALE: 3/16" = 1'-0"

2

NOTE:
ALL NEW EQUIPMENT SHALL BE PAINTED TO MATCH NEW POLE

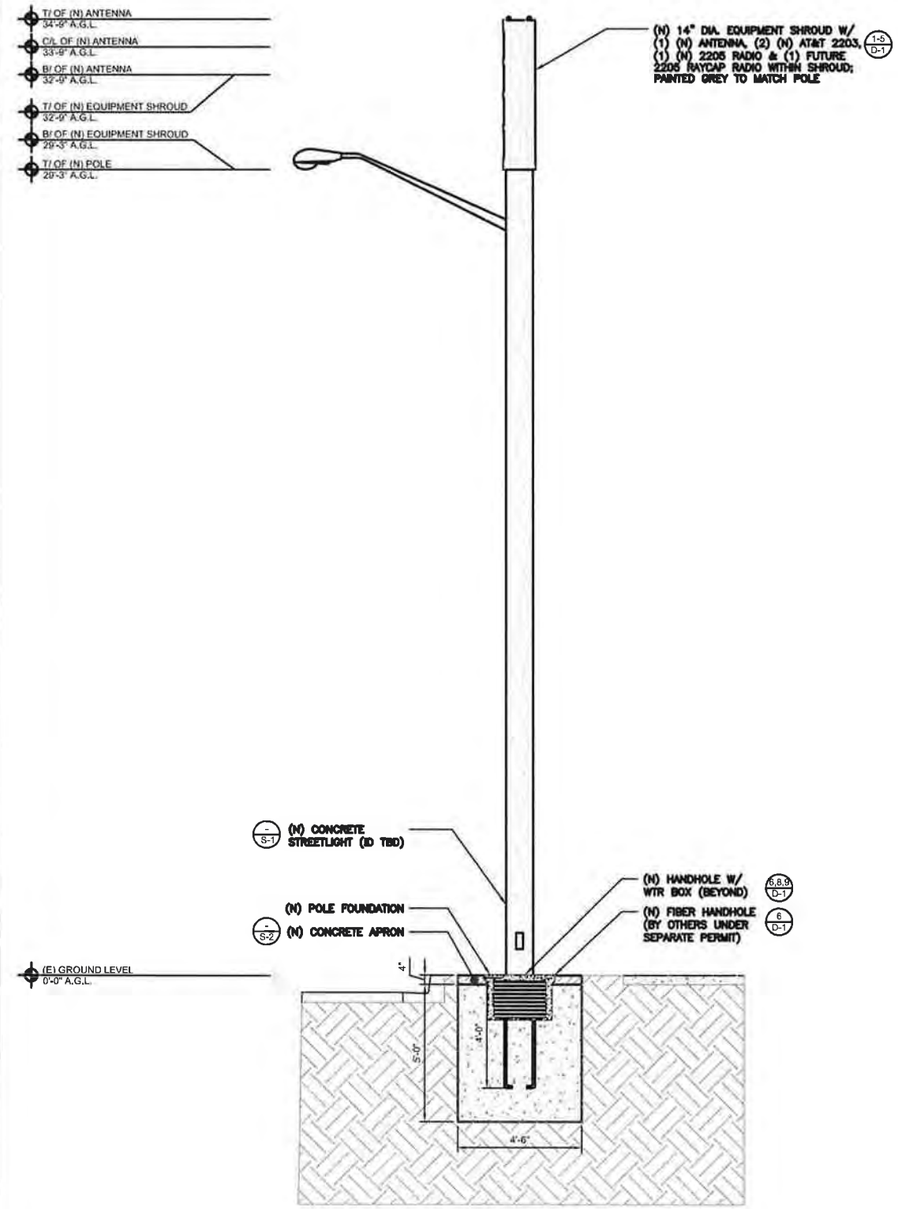

NEW WEST ELEVATION

24"x36" SCALE: 3/8" = 1'-0"
11"x17" SCALE: 3/16" = 1'-0"

1

at&t

ERICSSON
330 COMMERCE, STE. 200
IRVINE, CA 92602

M SQUARED WIRELESS
1367 CALLE AVANZADO
SAN CLEMENTE CA 92673 (949) 361-0024

DRAWN BY:	AMF
CHECKED BY:	MM

REV	DATE	DESCRIPTION
E	02/16/18	100% CONSTRUCTION
D	02/05/18	100% CONSTRUCTION
C	12/14/17	100% CONSTRUCTION
B	12/07/17	95% CONSTRUCTION
A	11/03/17	90% CONSTRUCTION

IT IS A VIOLATION OF LAW FOR ANY PERSON, UNLESS THEY ARE ACTING UNDER THE DIRECTION OF A LICENSED PROFESSIONAL ENGINEER, TO ALTER THIS DOCUMENT

SITE ID: HBNPB 28A
981 PRESIDIO DR
COSTA MESA, CA, 92626

SHEET TITLE
ELEVATIONS

SHEET NUMBER
A-3

PROPOSED SITE LOCATION LOOKING WEST

1

at&t

ERICSSON
330 COMMERCE, STE. 200
IRVINE, CA 92602

M SQUARED WIRELESS
1357 CALLE AVANZADO
SAN CLEMENTE CA 92673 (949) 361-6034

DRAWN BY:	AMF
CHECKED BY:	MM

REV	DATE	DESCRIPTION
E	02/16/18	100% CONSTRUCTION
D	02/05/18	100% CONSTRUCTION
C	12/14/17	100% CONSTRUCTION
B	12/07/17	95% CONSTRUCTION
A	11/03/17	90% CONSTRUCTION

IT IS A VIOLATION OF LAW FOR ANY PERSON, UNLESS THEY ARE ACTING UNDER THE DIRECTION OF A LICENSED PROFESSIONAL ENGINEER, TO ALTER THIS DOCUMENT.

SITE ID: HBNPB 28A
981 PRESIDIO DR
COSTA MESA, CA, 92626

SHEET TITLE
SITE IMAGE

SHEET NUMBER
A-4

AVAILABLE FROM EXCEL SIGN AND DECAL:
http://www.weneedsigns.com/home.php?cal+1135 AND CLICK ON AT&T
PH: 510-651-0445
N01-DC-16 1"X6" NOTICE DECAL
"For 1 Foot Distance" VINYL DECAL WITH ADHEDSIVE BACKING

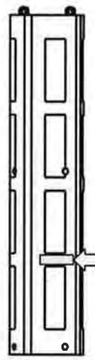

NOTICE

RF energy emitted by this device may exceed the FCC's general public exposure limits. Stay at least 1 foot away from the device.
Call 800-638-2822 for help if you need access within 1 foot

Place 3 NOTICE sticker at the bottom of the front of the radome of each antenna.

ANTENNA DISCLAIMER LABEL

24"x36" SCALE: NTS
11"x17" SCALE: NTS

7

ERICSSON - MICRO RADIO 2205	
MECHANICAL SPECIFICATIONS:	
DIMENSIONS (WxDxH):	7.87"x3.94"x7.87", INCLUDING MOUNTING BRACKET AND ESTHETIC FRONT COVER
VOLUME AND WEIGHT:	4 LITRES AND < 4 kg (8.82 lbs.)
MOUNTING:	WALL AND POLE MOUNT
INTERFACE SPECIFICATIONS:	
ANTENNA PORTS:	2 x 4 3-10(F)
CPRI:	2 x 2 5/5/10 Gbps (EXCHANGEABLE SFP MODULES)
OPTICAL INDICATORS:	6
EXTERNAL ALARM:	2
FIELD GROUND:	1
ELECTRICAL SPECIFICATIONS:	
POWER SUPPLY:	-48 VCD OR 100 -250 VAC
POWER OUTPUT:	97 WATTS MAX
MAX HEAT DISSIPATION:	90 WATTS
MINIMUM AC FUSE RATING:	6 AMP

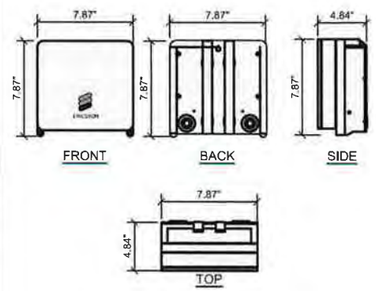

MICRO RADIO 2205

24"x36" SCALE: NTS
11"x17" SCALE: NTS

4

GALTRONICS: GQ2410-06621 PSEUDO OMNI CANISTER ANTENNA	
MECHANICAL SPECIFICATIONS:	
DIMENSIONS (HxD):	24.9 x 10 INCHES (643 x 255 mm)
WEIGHT EXCL MOUNTING BRACKETS:	17.7lbs (9 kg)
NO OF CONNECTORS:	10 X 4 3-10 DIN FEMALE
CONNECTOR TYPE & FREQUENCY BAND [MHz]:	4 X 4 3-10 DIN FEMALE (1695-2360) MHz 4 X 4 3-10 DIN FEMALE (3550-3700) MHz 2 X 4 3-10 DIN FEMALE (5150-5950) MHz
MAX WIND SPEED:	150 mph
RADOME MATERIAL:	ASA
SHIPPING DIMS (LxWxD):	30"X19"X19" (762x483x483)mm
GROSS SHIPPING WEIGHT:	26 lbs (12kg)

PART NO. GQ2410-06621-11 (GRAY)
PART NO. GQ2410-06621-611 (BROWN)
PART NO. GQ2410-06621-811 (CHROME)

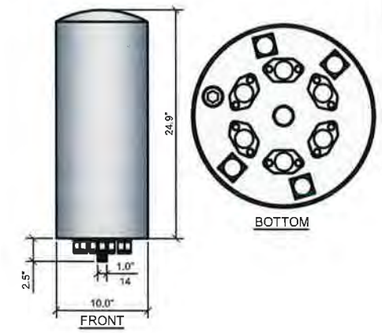

GALTRONICS P6480-6 OMNI ANTENNA

24"x36" SCALE: NTS
11"x17" SCALE: NTS

1

ELECTROMATE HINGED 3R ENCLOSURE	
DIMENSIONS:	
A	12"
B	12"
C	6"

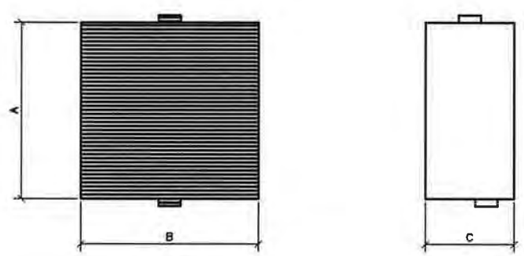

UN-METERED FUSED PANEL

24"x36" SCALE: NTS
11"x17" SCALE: NTS

8

RAYCAP - RSCAC-633-P-120-D	
ELECTRICAL	MECHANICAL
SURGE PROTECTION DEVICE (SPD) TYPE TO UL: STRIKESORB 30-A NUMBER OF CIRCUITS PROTECTED: 4 SURGE PROTECTIVE DEVICE (SPD) TYPE PER UL 1449 4TH EDITION: TYPE 2 COMPONENT ASSEMBLY SURGE PROTECTION DEVICE (SPD) CLASS TO IEC 61643-11: CLASS II NOMINAL OPERATING VOLTAGE (UN): 120 V NOMINAL DISCHARGE CURRENT (IN) PER UL 1449 4TH EDITION: 20 KA 8/20 MS MAXIMUM DISCHARGE CURRENT (IMAX) PER IEC 61643-11 65 KA 8/20 MS MAXIMUM CONTINUOUS OPERATING VOLTAGE (UC) (MCOV) 150V VOLTAGE PROTECTION LEVEL (UP) PER IEC 61643-11: 700V VOLTAGE PROTECTION RATING (VPR): 20 KA 8/20 SUPPRESSION TECHNOLOGY: MOV PROTECTION MODES (DUAL MODE): LINE TO NEUTRAL, NEUTRAL TO GROUND STRIKESORB MODULES ARE COMPLIANT TO THE FOLLOWING SURGE PROTECTIVE DEVICE (SPD) STANDARDS: UL 1449 4TH EDITION: 2011 IEC 61643-11: 2011 EN 61643-11: 2012 IEEE C62.11: 2005 IEEE C62.41: 2002 IEEE C62.45: 2002 NEMA LS-1 CERTIFICATION UL VOV: Q2	CONNECTION TERMINAL: COMPRESSION LUG #6 - #14 AWG (13 - 2MM2) TERMINAL BLOCK #10-#26 AWG (5 - 0 14MM2) ENVIRONMENTAL INGRESS PROTECTION (IP) RATING: NEMA 4X OPERATION TEMPERATURE: (°C) -40° C TO +80° C STORAGE TEMPERATURE: (°C) -70° C TO +80° C ENCLOSURE TYPE (OUTDOOR) POLYCARBONATE: UL 94V-0 RATED ENCLOSURE DIMENSION: (L * W * H) 8.58" X 5.06" X 10.08" [217 * 128 * 256 MM] WEIGHT: 2.25 LBS [1.02KG]

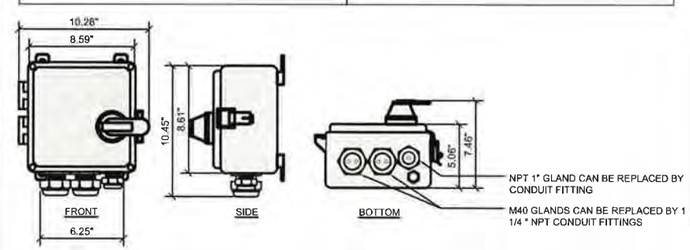

RAYCAP DISCONNECT

24"x36" SCALE: NTS
11"x17" SCALE: NTS

5

ERICSSON - MICRO RADIO 2203	
MECHANICAL SPECIFICATIONS:	
DIMENSIONS (WxDxH):	7.87"x3.94"x7.87", INCLUDING MOUNTING BRACKET AND ESTHETIC FRONT COVER
VOLUME AND WEIGHT:	4 LITRES AND < 4.5 kg (8.92 lbs)
MOUNTING:	WALL AND POLE MOUNT
INTERFACE SPECIFICATIONS:	
ANTENNA PORTS:	2 x 4 3-10(F)
CPRI:	2 x 2 5/5/10 Gbps (EXCHANGEABLE SFP MODULES)
OPTICAL INDICATORS:	6
EXTERNAL ALARM:	2
FIELD GROUND:	1
ELECTRICAL SPECIFICATIONS:	
POWER SUPPLY:	-48 VCD OR 100 -250 VAC
POWER OUTPUT:	97 WATTS MAX
MAX HEAT DISSIPATION:	90 WATTS
MINIMUM AC FUSE RATING:	6 AMP

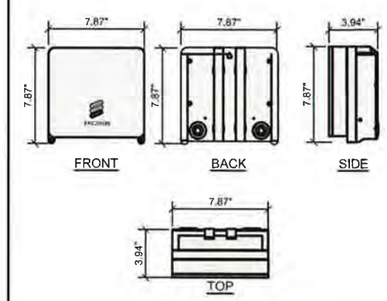

MICRO RADIO 2203

24"x36" SCALE: NTS
11"x17" SCALE: NTS

2

SQUARE-D HINGED 3R ENCLOSURE # D221NRB	
DIMENSIONS:	
A	7.75"
B	9.63"
C	3.75"

AT&T MOBILITY FUSED DISCONNECT

24"x36" SCALE: NTS
11"x17" SCALE: NTS

9

COVER FEATURES:
- STANDARD LOAD RATING: 20,800 LBS. WHEEL LOAD ON 10"x20" PLATE
- 2 BOLT DOWN LOCATIONS
- STAINLESS STEEL BOX INSERTS
- POLYMER CONCRETE CONSTRUCTION
- NON-SKID SURFACE STANDARD
- 20K TO BE EMBOSSED ON COVER
- APPROXIMATE WEIGHT = 120 LBS.

COVER FEATURES:
- POLYMER CONCRETE CONSTRUCTION
- LIGHTWEIGHT
- STACKABLE FOOT
- APPROX. WEIGHT 188 LBS.

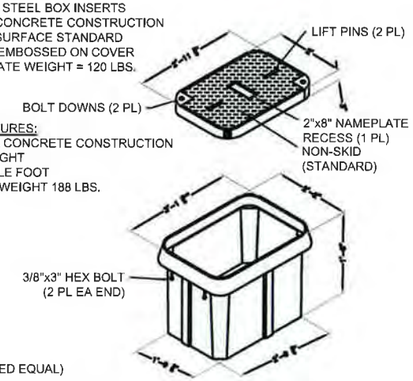

(OR APPROVED EQUAL)

HANDHOLE

24"x36" SCALE: NTS
11"x17" SCALE: NTS

6

CONCEALEAR CONCEALMENT POLE TOP ECCENTRIC	
MECHANICAL SPECIFICATIONS:	
DIMENSIONS (WxDxH):	65"x014"
MOUNTING:	MOUNTS TO TOP OF POLE

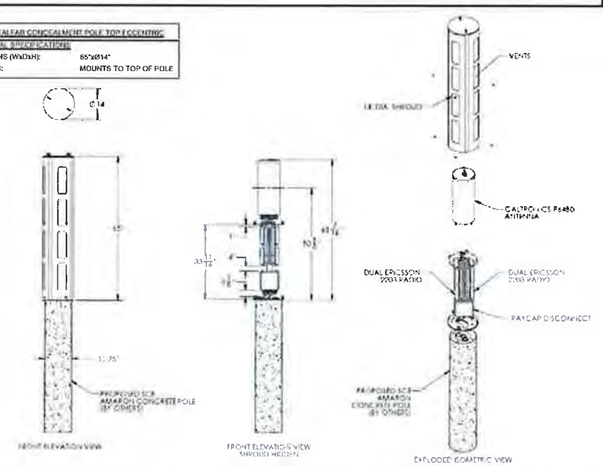

EQUIPMENT SHROUD

24"x36" SCALE: NTS
11"x17" SCALE: NTS

3

at&t

ERICSSON
330 COMMERCE, STE. 200
IRVINE, CA 92602

M SQUARED WIRELESS
1867 CALLE AVANZADO
SAN CLEMENTE CA 92673 (949) 361-0924

DRAWN BY:	AMF
CHECKED BY:	MM

REV	DATE	DESCRIPTION
E	02/16/18	100% CONSTRUCTION
D	02/05/18	100% CONSTRUCTION
C	12/14/17	100% CONSTRUCTION
B	12/07/17	95% CONSTRUCTION
A	11/03/17	90% CONSTRUCTION

IT IS A VIOLATION OF LAW FOR ANY PERSON, UNLESS THEY ARE ACTING UNDER THE DIRECTION OF A LICENSED PROFESSIONAL ENGINEER, TO ALTER THIS DOCUMENT.

SITE ID: HBNPB 28A
981 PRESIDIO DR
COSTA MESA, CA, 92626

SHEET TITLE
DETAILS

SHEET NUMBER
D-1

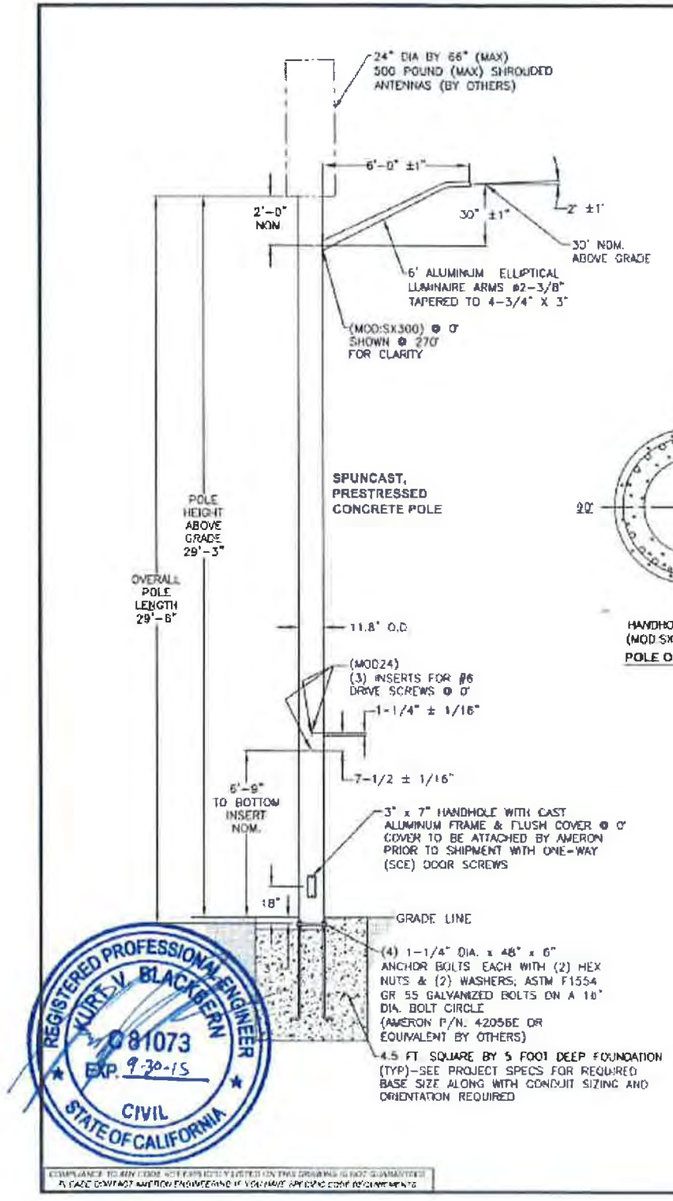

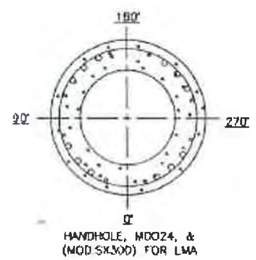

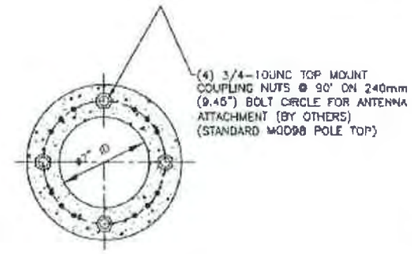

POLE TOP DETAILS

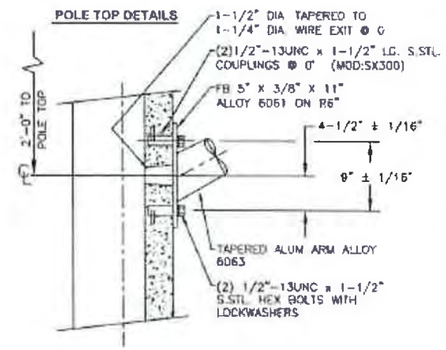

BRACKET ARM TO POLE CONNECTION

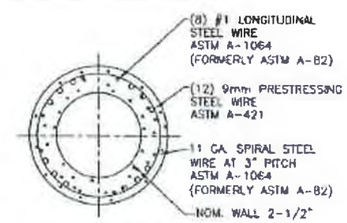

SECTION DETAILS

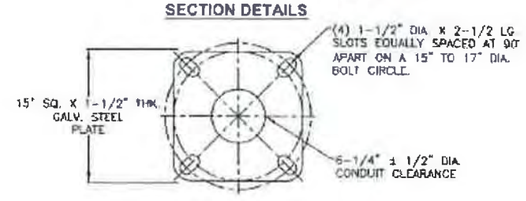

BASE PLATE DETAILS

REV.	DATE	DESCRIPTION	DRN.	APPR.
A	09/07	REDRAWN, ADDED POLE P/N	A.C.	
B	05/08	UPDATED FOR ORACLE	T.L.	
C	02/10	A/B WERE A36M55, NOW A307	J.C.	
D	06/15	UPDATED TO NEW DWG. STDS.	L.P.	

"F" LEVEL CONFIG CODES		
OPTION CLASS	ENTRY	INFO.
COATING	S	
HH COVER	66546E	
DOOR SCRS	SCE	
DRILL IN MOD	MOD24	

"P" LEVEL CONFIG CODES		
OPTION CLASS	ENTRY	INFO.
MIX	B1	
FINISH	5	
BASEPLATE	63250E	
COLLAR	NONE	
POLE TOP CON.	MOD98	
CAST-IN MOD	MODSX300	

300MM NON-TAPERED BASE PLATE ROUND POLE

POLE DESIG-NATION	POLE HEIGHT ABOVE GRADE	OVERALL POLE LENGTH	BOLT CIRCLE	BASE O.D.	ULTIMATE G.L. MOMENT (ft.-lbs.)	POLE WEIGHT (lbs.)
BP300X09	29'-3"	29'-6"	16"	11-13/16"	65,000	2900

( ) POLES REQUIRED (P/N: BP300X09-16137), EACH WITH 6' WALL BRACKET ELLIPTICAL ARM (P/N: LAEB6A)

NOTES:
1. MIX (B15S): SCE BLACK & WHITE, LIGHTLY EXPOSED AGGREGATE FINISH WITH FLAT WATER SEALER COATING.
2. ASTM C-150 TYPE III GRAY CEMENT.
3. f'c @ 28 DAYS=7,000 PSI, USING SPUN CYLINDER TEST.
4. f'c @ 28 DAYS=5,000 PSI, USING ASTM C-31 CYLINDER TEST.
5. POLES MANUFACTURED TO ASTM C-1089-13 SPECIFICATIONS.
6. PROTECTIVE COAT EXPOSED P.C. WIRES AT POLE ENDS
7. THE POLE DEPICTED ON THIS DRAWING IS DESIGNED TO WITHSTAND THE LOADS IMPARTED BY A SINGLE SIDE MOUNTED TAPERED ELLIPTICAL ALUMINUM ARM (NOT TO EXCEED 6' OFFSET, 3.7 SQ. FT. EPA, 25 LBS.) WITH THE ARM HOLDING A DOWNWARD FACING AREA OR PENDENT LUMINAIRE (NOT TO EXCEED 2.0 SQ. FT. EPA, 50 POUNDS); THE POLE ALSO SUPPORTS (1) ANTENNA SHROUD CENTERED 3' ABOVE THE POLE TOP (NOT TO EXCEED 6.3 SQ. FT. EPA, 225 LBS. MAX) AS DESIGNED PER THE 2013 AASHTO LTS-6 (CRITERIA FOR STREET LIGHTING POLES), 2010 CALIFORNIA BUILDING CODE & ASCE7-05 FOR 90 MPH WIND AND SEISMIC ZONE (3-SECOND GUSTS) & SEISMIC CRITERIA Ss=1.75 & S1=0.6. PLEASE CONTACT & ADVISE AMERON ENGINEERING IF THE INTENDED VALUES EXCEED THESE VALUES.
8. DUE TO THE NATURE & CHARACTERISTICS OF CONCRETE, SIDE MOUNT SPACING DIMENSIONS CAN ONLY BE TAKEN TO THE NEAREST 1/8 INCH.

APPROVED BY DATE

REGISTERED PROFESSIONAL ENGINEER
KURT V. BLACKBERN
C 81073
EXP. 9-30-15
CIVIL
STATE OF CALIFORNIA

COMPLIANCE TO ANY CODE NOT EXPRESSLY LISTED ON THIS DRAWING IS NOT GUARANTEED
PLEASE CONTACT AMERON ENGINEERING IF YOU HAVE ANY CODE REQUIREMENTS

SOUTHERN CALIFORNIA EDISON
BP300X09 POLE WITH SINGLE 6' ARM

THIS DOCUMENT CONTAINS INFORMATION WHICH IS PROPRIETARY TO AMERON. IT SHALL NOT BE REPRODUCED, USED OR DISCLOSED TO ANYONE WITHOUT THE PRIOR WRITTEN PERMISSION OF AMERON.

AMERON POLE PRODUCTS

DRAWN: SJB	DATE: 10/2003	
SCALE: N.T.S.	DWG. NO. 040-01277	REV D

at&t

ERICSSON
330 COMMERCE, STE. 200
IRVINE, CA 92602

M SQUARED WIRELESS
1267 CALLE AVANZADO
SAN CLEMENTE CA 92673 (949) 361-9024

DRAWN BY: AMF
CHECKED BY: MM

REV	DATE	DESCRIPTION
E	02/16/18	100% CONSTRUCTION
D	02/05/18	100% CONSTRUCTION
C	12/14/17	100% CONSTRUCTION
B	12/07/17	95% CONSTRUCTION
A	11/03/17	90% CONSTRUCTION

IT IS A VIOLATION OF LAW FOR ANY PERSON, UNLESS THEY ARE ACTING UNDER THE DIRECTION OF A LICENSED PROFESSIONAL ENGINEER, TO ALTER THIS DOCUMENT.

SITE ID: HBNPB 28A
981 PRESIDIO DR
COSTA MESA, CA, 92626

SHEET TITLE
POLE DETAILS

SHEET NUMBER
S-1

MC 890 Foundation Detail for Fiberglass Nostalgic, Fiberglass, Steel, or Concrete Electroliers

Scope MC 890.1 Electrolier Foundation Detail

Figure MC 890–1: Electrolier Foundation Detail

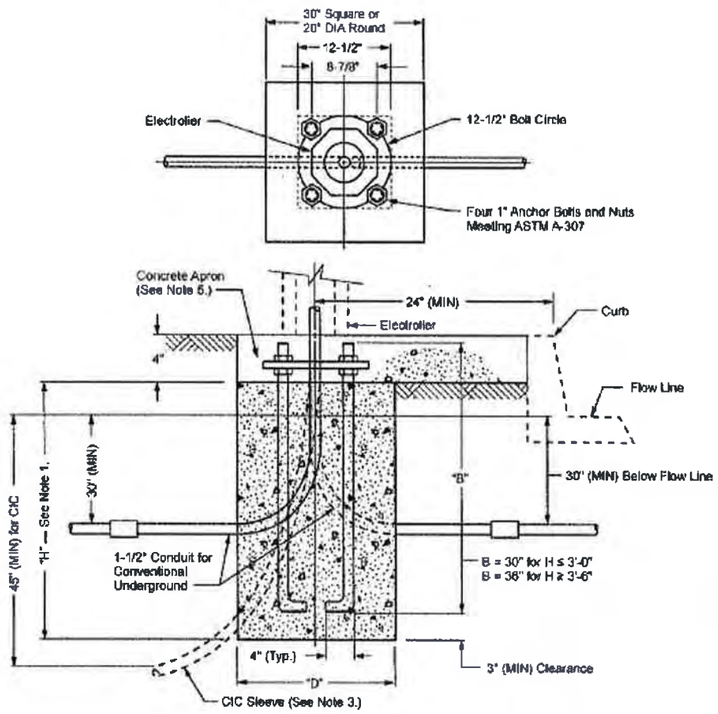

Note(s):

1. The footing depth will vary depending on the type of soil and wind loading requirements. Consult local government agency for requirements. See Table MC 890–1 (Sheet 3) through Table MC 890–4 (Sheet 4).
2. Foundation shall be installed after conduit or CIC (for Underground Service), curbs, and sidewalks are in place and grades are established.
3. 1-1/2" Plastic CIC Sleeve for UG Concrete Electrolier (tape both ends to prevent debris from entering the sleeve).
4. Concrete to reach a minimum compression strength of 2800 psi in 28 days. See UGS 20.3.
5. Place a minimum size concrete apron of 30" x 30" x 4" thick around the pole at the ground level to provide a constrained surface condition when required. Grout to be placed after pole is set and plumbed.

Scope MC 890.3 Electrolier Foundation Requirements

Table MC 890–1: 70 MPH Wind Zone, Constrained Surface Condition

Electrolier Foundation Requirements								
	Soil Type	Fiberglass, Concrete, or Steel				Nostalgic		
		23' Shaft		28' Shaft		All Poles	Fiberglass	Marbelite
	Per UBC[a]	H	D	H	D	H	D	D
I.	Massive Crystalline Bedrock	2'-6"	20" dia.	2'-6"	20" dia.	2'-6"	20" dia.	24" dia.
		2'-6"	30" x 30"	2'-6"	30" x 30"	2'-6"	30" x 30"	30" x 30"
II.	Sedimentary and Foliated Rock	2'-6"	20" dia.	2'-6"	20" dia.	2'-6"	20" dia.	24" dia.
		2'-6"	30" x 30"	2'-6"	30" x 30"	2'-6"	30" x 30"	30" x 30"
III.	Sandy Gravel, Gravel	3'-0"	20" dia.	3'-0"	20" dia.	3'-0"	20" dia.	24" dia.
		2'-6"	30" x 30"	2'-6"	30" x 30"	2'-6"	30" x 30"	30" x 30"
IV.	Sand, Silty Sand, Clayey Sand, Silty Gravel, Clayey Gravel	3'-6"	20" dia.	3'-6"	20" dia.	3'-6"	20" dia.	24" dia.
		2'-6"	30" x 30"	2'-6"	30" x 30"	2'-6"	30" x 30"	30" x 30"
V.	Clay, Sands, Sandy Clay, Silty Clay, Clayey Silt	4'-0"	20" dia.	4'-6"	20" dia.	4'-0"	20" dia.	24" dia.
		2'-6"	30" x 30"	3'-6"	30" x 30"	2'-6"	30" x 30"	30" x 30"

[a] Uniform Building Code — 1991

Note(s):

1. H = Depth of footing
2. D = Diameter of round footing or the side dimension of square footing.

Table MC 890–2: 70 MPH Wind Zone, Non-Constrained Surface Condition

Electrolier Foundation Requirements								
	Soil Type	Fiberglass, Concrete, or Steel				Nostalgic		
		23' Shaft		28' Shaft		All Poles	Fiberglass	Marbelite
	Per UBC[a]	H	D	H	D	H	D	D
I.	Massive Crystalline Bedrock	2'-6"	20" dia.	2'-6"	20" dia.	2'-6"	20" dia.	24" dia.
		2'-6"	30" x 30"	2'-6"	30" x 30"	2'-6"	30" x 30"	30" x 30"
II.	Sedimentary and Foliated Rock	3'-0"	20" dia.	3'-6"	20" dia.	3'-0"	20" dia.	24" dia.
		2'-6"	30" x 30"	2'-6"	30" x 30"	2'-6"	30" x 30"	30" x 30"
III.	Sandy Gravel, Gravel	3'-6"	20" dia.	4'-0"	20" dia.	3'-6"	20" dia.	24" dia.
		3'-0"	30" x 30"	3'-0"	30" x 30"	3'-0"	30" x 30"	30" x 30"
IV.	Sand, Silty Sand, Clayey Sand, Silty Gravel, Clayey Gravel	4'-0"	20" dia.	4'-6"	20" dia.	4'-0"	20" dia.	24" dia.
		3'-0"	30" x 30"	3'-6"	30" x 30"	3'-0"	30" x 30"	30" x 30"
V.	Clay, Sands, Sandy Clay, Silty Clay, Clayey Silt	4'-6"	20" dia.	5'-0"	20" dia.	4'-6"	20" dia.	24" dia.
		3'-6"	30" x 30"	4'-0"	30" x 30"	3'-6"	30" x 30"	30" x 30"

[a] Uniform Building Code — 1991

Note(s):

1. H = Depth of footing
2. D = Diameter of round footing or the side dimension of square footing

at&t

ERICSSON
330 COMMERCE, STE. 200
IRVINE, CA 92602

M SQUARED WIRELESS
1267 CALLE AVANZADO
SAN CLEMENTE CA 92673 (949) 201-0024

DRAWN BY: AMF
CHECKED BY: MM

REV	DATE	DESCRIPTION
E	02/16/18	100% CONSTRUCTION
D	02/05/18	100% CONSTRUCTION
C	12/14/17	100% CONSTRUCTION
B	12/07/17	95% CONSTRUCTION
A	11/03/17	90% CONSTRUCTION

IT IS A VIOLATION OF LAW FOR ANY PERSON, UNLESS THEY ARE ACTING UNDER THE DIRECTION OF A LICENSED PROFESSIONAL ENGINEER, TO ALTER THIS DOCUMENT.

SITE ID: HBNPB 28A
981 PRESIDIO DR
COSTA MESA, CA, 92626

SHEET TITLE
POLE FOUNDATION DETAILS

SHEET NUMBER
S-2

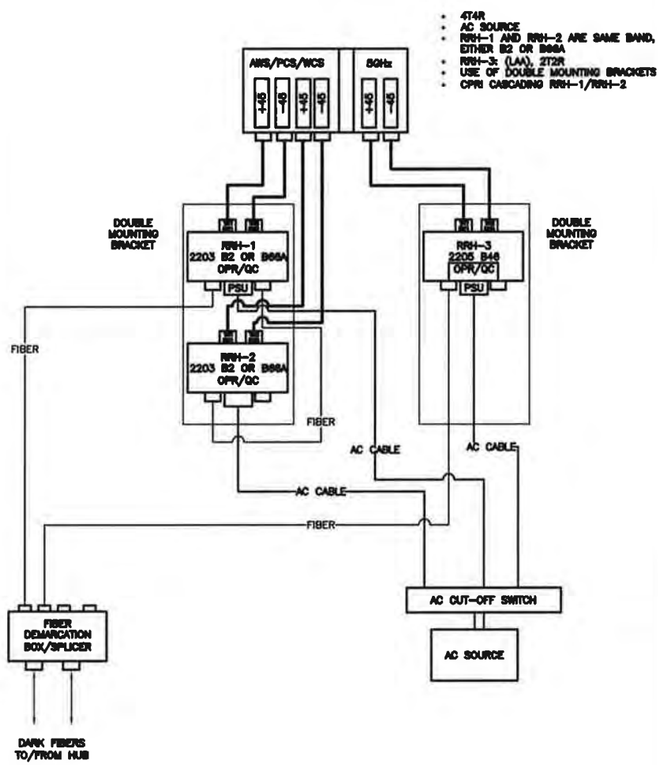

PICO PLUMBING DIAGRAM — 24"x36" SCALE: NTS / 11"x17" SCALE: NTS — 6

NOTE:
ALL GROUND CONDUCTORS TO BE #6 THHN/THWN GREEN STRANDED COPPER UNLESS OTHERWISE NOTED OR REQUIRED BY EQUIPMENT MANUFACTURER.

EXOTHERMIC WELD CONNECTIONS ■
MECHANICAL TYPE CONNECTIONS ●
GROUNDING BAR

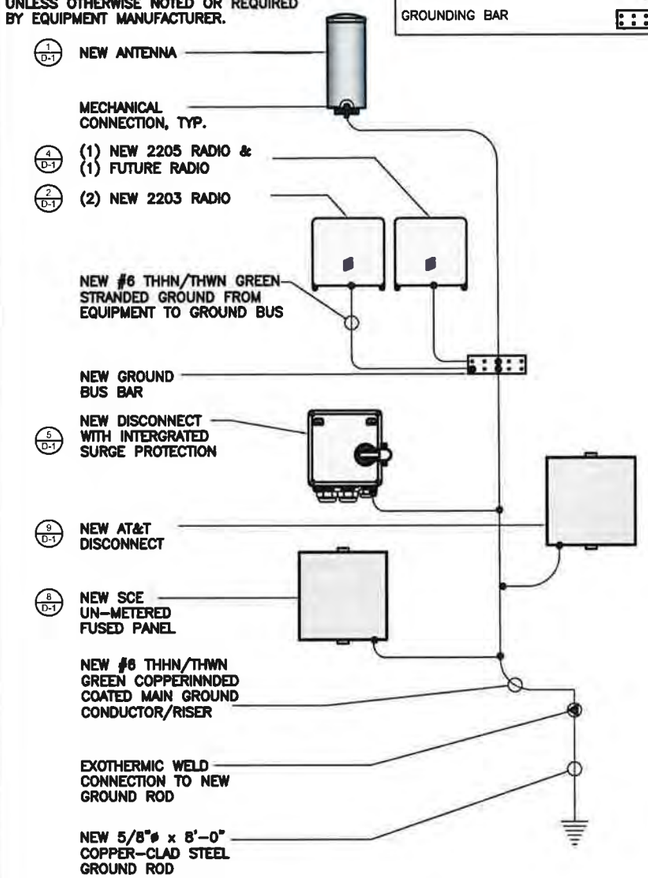

GROUNDING SCHEMATIC — 24"x36" SCALE: NTS / 11"x17" SCALE: NTS — 3

NOTE:
UTILITY DESIGN AND RUNS ARE PRELIMINARY. PENDING FINAL DESIGN FROM UTILITY PROVIDERS

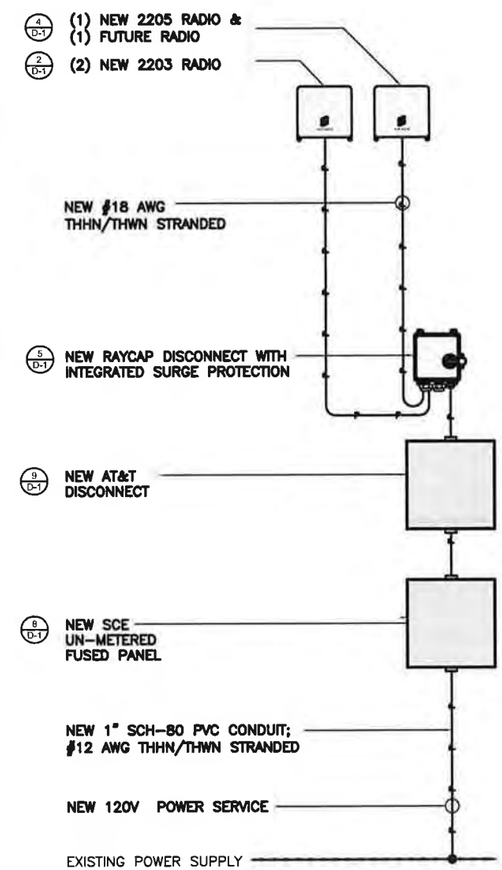

SINGLE LINE DIAGRAM — 24"x36" SCALE: NTS / 11"x17" SCALE: NTS — 1

NOT USED — 24"x36" SCALE: NTS / 11"x17" SCALE: NTS — 7

NOT USED — 24"x36" SCALE: NTS / 11"x17" SCALE: NTS — 4

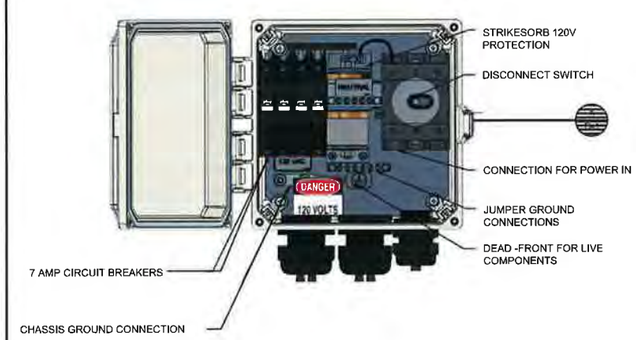

BREAKER SCHEDULE — 24"x36" SCALE: NTS / 11"x17" SCALE: NTS — 2

at&t

ERICSSON
330 COMMERCE, STE. 200
IRVINE, CA 92602

M SQUARED WIRELESS
1367 CALLE AVANZADO
SAN CLEMENTE CA 92673 (949) 391-9984

DRAWN BY:	AMF
CHECKED BY:	MM

REV	DATE	DESCRIPTION
E	02/16/18	100% CONSTRUCTION
D	02/05/18	100% CONSTRUCTION
C	12/14/17	100% CONSTRUCTION
B	12/07/17	95% CONSTRUCTION
A	11/03/17	90% CONSTRUCTION

IT IS A VIOLATION OF LAW FOR ANY PERSON, UNLESS THEY ARE ACTING UNDER THE DIRECTION OF A LICENSED PROFESSIONAL ENGINEER, TO ALTER THIS DOCUMENT.

SITE ID: HBNPB 28A
981 PRESIDIO DR
COSTA MESA, CA, 92626

SHEET TITLE
ELECTRICAL DETAILS

SHEET NUMBER
E-1

ATTACHMENT 5

AT&T Mobility
Small Cell Project
Site Name: CRAN_RLOS_HBNPB_024

Background

AT&T Mobility (AT&T) mission is to connect people with their world everywhere they live, work and play. AT&T delivers advance mobile services, high speed internet and smart solutions for people and business. AT&T is the global leader in Technology, Media and Telecommunications industry and is committed to the development, growth and improvement of communications in the United States. AT&T is a nationwide wireless service provider located throughout the United States and in U.S. territories. Millions of wireless connections take advantage of the company's mobile products and services. AT&T is committed to improve the customer experience of their hand-held devices, portable computing, and connected automobiles. The company's commitment is to have a robust network of cell sites that could bring faster data speeds and voice connectivity.

AT&T Mobility is a Telephone Corporation registered with the California Public Utilities Commission. The CPUC registration number is U 3060 C. As a Telephone Corporation, AT&T has a legal right to access public right of way under Section 7901 of the California Public Utilities Code.

Mobile Wireless Services

Traditional macro sites are the fundamental building blocks needed for the provision of wireless voice services and high-speed mobile internet. AT&T uses high-band and low-band spectrum to provide wireless service. Each spectrum band has different propagation characteristics, which may experience varied noise or signal interference at a given location. To increase the service quality and reduce noise and interference to the customer, AT&T uses multiple layers of its licensed spectrum to bring its facilities closer to the end user. Signal interference created by environmental clutter or noise from surrounding sources, degrades the signal quality in a manner that affects data rates, service quality, and ultimately coverage. Placing facilities closer to the end user creates smaller coverage cells that produce faster data rates and produces a more efficient use of the limited spectrum.

Adding macro sites has been the typical design solution to increase coverage, capacity and to off-load existing cell sites in the network. This design alternative consists of multiple antennas mounted to a large support structure and a base station of several radio cabinets. The topography of a given area, dense concentration of buildings, the lack of available real estate, the high construction costs and other environmental factors has made it more difficult to bring wireless services closer to the end user in order to reduce weak signals and noise interference, and to increase the data rates which support existing and future demands for optimal user experience of mobile devices.

AT&T solution to increase the densification of wireless signals and coverage capacity of its network in any given geographical area is the implementation of small cells within the public rights of way. Small cells are lightweight and low power antenna solutions designed to cover a radius of up to 1,500 feet. The typical configuration is a single omni directional antenna or a set of small antennas mounted to existing right-of-way infrastructure, including utility poles, replacement streetlights or other infrastructure. Remote radios are also used with the omni-directional antenna to connect the small cell to nearby macro locations or head-end stations via fiber connections. Small cell installations are non-intrusive to the local community and can easily blend-in with the natural urban or suburban landscape.

Project Description

AT&T engineers have identified several locations in Costa Mesa that require stronger signal densification in order to increase throughput rates and to meet the existing and future demands. These locations are shown on the enclosed Small Cell Network map, which includes approximate coverage for each location shown in red circles. Additional areas may be identified in the future as the engineers continue to monitor the network service quality and capacity.

The subject project is located on the intersection of Baker Street and Filmore Way. AT&T proposes to install a single omni-directional antenna mounted on an extension arm attached to an existing wood utility pole. The associated radios, and surge suppressor switch will be install within the support arm. Additional conduits for fiber and power risers will be installed on the subject wood pole. All portions of the installation will be painted brown to match the color of the existing utility pole. The proposed installation is small in scale and will blend with the existing street landscape.

The project scope will consist of the following:

- Installation of a support cross arms.
- Installation of a single omni-directional antenna.
- Installation of four radio units and raycap disconnect switch.
- Installation of disconnect power switches on the existing utility pole.
- Installation of power and fiber conduit risers.
- Installation of a grounding rod.

Plans depicting the project location, design, height and style with the new wireless antenna installation are enclosed. Photographic simulations showing the final antenna installation on the wooden pole is also enclosed. All portions of the antenna, radios, disconnect device will be painted to match.

Alternative Analysis

No alternative analysis is being provided for this type and scale antenna installation within the public right-of-way. Alternatives to this proposal would generally include

building additional towers in the general area, which would create a greater visual impact to the community.

Conformance with FCC Regulations

The proposed low powered antenna installation attached to the utility pole is considered categorical excluded by the FCC based on the analysis included in the FCC Optional Checklist for Determination of the Local Official's Guide to RF (attached). Installation that are categorically excluded are considered to meet or exceed the FCC standards for RF Emissions.

Construction and Maintenance

Construction of the proposed project will take approximately 30-days. All construction will be done in a manner that minimizes impact to residents and business in the area. Existing underground or overhead power and fiber connections will be used with minimal trenching. Directional boring will be used when deemed appropriate for each specific location.

Maintenance of the subject facility is minimal. The majority of the monitoring is done from AT&T's switching offices. If needed, a site visit to change any radio equipment will be coordinated with the existing utility providers and city.

Project Code Compliance

The subject project complies with the City of Costa Mesa Telecommunication Regulatory Ordinance in the Public Right-of-Way, Section 19-15 in the following ways:

1. The proposed wireless facility is a small cell installation to be placed on a utility pole in the public right-of-way and is visually compatible with the surrounding development.
2. The project is allowed subject to the city's approval of a Minor Conditional Use Permit and Encroachment Permit. The proposed installation will not interfere with the use of the existing right-of-way. No ground mounted equipment is proposed.
3. The proposed facility is a low powered antenna designed to work in conjunction with other small cell sites in the area and to off-load capacity from an existing macro facility. The installation will comply with applicable regulations of the Federal Communications Commission as demonstrated in the enclosed FCC Local Official Guide to RF – Appendix A.
4. As stated in the project description, the purpose for the deployment of small cells is to increase the signal quality and capacity to the identified commercial development in this portion of Costa Mesa. As such, implementation of the small cell project will reduce a data signal gap that currently existing at this location.
5. The applicant will conform to all City of Costa Mesa requirements.

EDISON
CARRIER SOLUTIONS℠
A Division of SOUTHERN CALIFORNIA EDISON℠

Brian P. Ryan
Principle Manager
Telephone: 909-274-1949
Brian.Ryan@sce.com

March 1, 2018

To Whom It May Concern:

Since 1994, Southern California Edison (SCE) has assisted wireless service providers in expanding their networks to meet customers' needs for telecommunications service. SCE makes available existing structures that can be used to co-locate the wireless service providers' equipment, while lessening the visual impacts on the community and constituency that is served. This letter requests that you help us in this endeavor.

In an effort to minimize the potential clutter that new vertical structures would produce, many California jurisdictions have adopted ordinances and policies encouraging wireless facilities to be mounted on street light poles within the public rights of way.

As you are aware, SCE owns and maintains street light poles in your jurisdiction pursuant to our LS-1 tariff. In order to accommodate the increasing demand for micro-cell site locations, SCE has agreed to allow wireless service providers to attach their antennas to some of these streetlight poles, and contractually requires the wireless service provider to comply with certain requirements, including a requirement that the facility will not impact SCE's ability to provide street lighting service.

Costa Mesa has and retains full control over the entitlement and permitting process for these and future sites. The wireless service providers also pay for electrical usage resulting from their sites. This electrical service is metered and billed separately, and the Jurisdiction is not impacted.

While SCE believes this approach benefits local governments as well as their constituency, we would not engage in this solution if doing so resulted in extra costs to SCE or Costa Mesa. We would therefore appreciate confirmation that Costa Mesa consents to use of its public rights of way for the purpose of licensing space on an SCE Streetlight Pole **# 2047169E** located at: **2850 Fairview Rd**. **AT&T** Site number:
SCL HBNPB 024
PTN# 3551A0DQGH
FA# 14345606.

Please sign this letter to indicate your consent and return it to me at the below address. If you have any questions, please feel free to call Alexandra Martin (714) 323-5951.

Regards,

Brian P. Ryan

Signature _____

Name _____

Title _____

Date: _____

SCE Edison Carrier Solutions
2 Innovation Way 1st Floor
Pomona, CA 91768

EDISON
CARRIER SOLUTIONS℠
A Division of SOUTHERN CALIFORNIA EDISON℠

Brian Ryan
Principal Manager Telecom Sales
Edison Carrier Solutions
e-mail: Brian.Ryan@sce.com

March 1, 2018

Costa Mesa Planning / Permitting Department

To Whom It May Concern:

Re: Letter of Authorization

SCE streetlight identified as – SCE Streetlight Pole # **2047169E** located adjacent: **2850 Fairview Rd**. **AT&T** Site Name: **SCL HBNPB 024**
PTN# 3551A0DQGH
FA# 14345606.

Southern California Edison Company (SCE) is the owner of the Light Pole, located in Costa Mesa, CA. AT&T "Carrier" has requested that SCE replace the existing Light Pole so that it can be used for operating a wireless communications facility, ("Site").

SCE has reviewed Carrier's preliminary plans for this Site and believe these plans are compatible with SCE's use of this Light Pole. Thus, as a representative of SCE, I hereby authorize Carrier, and its representatives, to seek and secure all right(s), including any environmental review associated with granting such rights, that are needed from the Jurisdiction to use the Light Pole and other property for this purpose as long as there are no costs to SCE.

Notwithstanding this authorization, SCE reserves the right to reject Carrier's request for use of its Light Pole for any reason, including imposed conditions or required changes to the light pole by the Jurisdiction, are unacceptable to SCE.

All correspondence and/or notices regarding use of SCE's Light Pole by Carrier, or any later requests by the Carrier for authorizations or approvals needed for construction, operation or maintenance of an approved Site, should include a copy to SCE.

If you have any questions concerning this project, please contact Alexandra Martin 714-323-5951.

Sincerely,

Brian P. Ryan

2 Innovation Way, 1st Floor
Pomona, CA 91768

PLEASE TRANSFER LETTER TO CITY LETTERHEAD

Date

Brian Ryan
Southern California Edison
Carrier Solutions Division
2 Innovation Way 1st Floor
Pomona, Ca 91768

Dear Mr. Ryan:

This letter authorizes Southern California Edison (SCE) to disconnect the SCE streetlight identified as – SCE Streetlight Pole **#2047169E** located adjacent: **2850 Fairview Rd**. **AT&T** Site number: **SCL HBNPB 024**
PTN# 3551A0DQGH
FA# 14345606 so that work can be performed to replace the existing Streetlight.

AT&T (Wireless Carrier) has requested that SCE replace the Southern California Edison streetlight with a new streetlight that will be used for operating the wireless communications facility identified as SCE Light Pole **#2047169E** located adjacent: 2850 Fairview Rd. **AT&T** Site number: **SCL HBNPB 024**
PTN# 3551A0DQGH
FA# 14345606.

Please coordinate the disconnecting of the streetlight directly with Costa Mesa, (please provide County Contact Name, Phone) so that the light will be out only for the above referenced work to be completed.

If you have any questions, please do not hesitate to call me.

Sincerely,

Name
Public Agency

SOUTHERN CALIFORNIA EDISON STREETLIGHT AUTHORIZATION

DEVELOPER/APPLICANT MUST PROVIDE THIS FORM
COMPLETED BY THE PUBLIC AUTHORITY
FOR ANY SCE-OWNED STREETLIGHT INSTALLATION, REMOVAL OR CHANGE REQUESTS
Incomplete forms will be returned and not processed

PUBLIC AUTHORITY NAME: City of Costa Mesa

Builder/Developer Name: AT&T / Ericsson **Phone #:** (281) 995-3829

Tract/Ref # leave blank **Streetlight Location** Pole # 2047169E, 2850 Faiview Road, HBNPB_24A

Please Check one: ☐ **Installation** ☐ **Removal** ☑ **Change**

Number of Lamp(s)	Lamp Size	Lamp Type
1	200 watts	Sodium Vapor

New Installations
Public Authority Responsibility for Streetlight Monthly Billing
Please Check one and fill out applicable dates:

____**Upon Energizing**
☐ **If Public Authority is collecting Builder/Developer Advanced Energy Payment, indicate date collected. (_____)**

Monthly Billing: ____**Establish new Service Account (SA)** **Use existing SA #**_____

____ **Commitment Date-**
Date Agreed upon by SCE and Public Authority (_____) or no later than 36 months from first streetlight energized whichever is earlier.

Monthly Billing: ____**Establish new Service Account (SA)** **Use existing SA #**_____

x ___**Public Authority is not responsible**
____**HOA Area** **Name**_____ **Other Entity (please define)** AT&T

Public Authority Notes:
Please notify Mohcine Chirar at (714) 754-5140 when scheduling disconnect of existing streetlight.

0 day outage requested; City of Costa Mesa retains responsibility for LS-1 lighting electrical payment; AT&Tcovers costs of pole replacement

Authorized Public Authority Agent

_____ _____ _____
Print name **Date** **Signature**

Phone #_____ _____
Title

TO BE COMPLETED BY SCE
ACTION: ENTER TRACT/REF# ON DM PROGRAM NAME FIELD.

District _____ **Planning AOR**_____ _____
PLANNER NAME (PRINT)

DM SR # _____ **Product #**_____ **(one per SLA)**

FORWARD COMPLETED COPIES OF THE SLA FORM, MAP AND CSD272 CONTRACT, IF APPLICABLE TO:
"Street & Outdoor Lighting Organization" Santa Ana Bldg. D

Radio Frequency – Electromagnetic Energy (RF-EME) Compliance Report

Analysis Completed For:
Site No. CRAN_RLOS_HBNPB_020
MRLOS045170
HBNPB 20B
3590 Harbor Gateway North
Costa Mesa, California 92626
Orange County
33.701857; -117.923339 NAD83
Utility Pole

Note that these results can also be applied to other Costa Mesa locations using the same antenna and power configurations with a greater than or equal to antenna radiation center.

The proposed AT&T installation will be in compliance with FCC regulations upon proper installation of recommended signage.

EBI Project No. 6218004289
June 19, 2018

Prepared for:

AT&T Mobility, LLC
100 West Alondra Boulevard
Gardena, California 90248

Prepared by:

EBI Consulting
environmental | engineering | due diligence

TABLE OF CONTENTS

EXECUTIVE SUMMARY 1
1.0 FEDERAL COMMUNICATIONS COMMISSION (FCC) REQUIREMENTS 3
2.0 AT&T RF EXPOSURE POLICY REQUIREMENTS 5
3.0 WORST-CASE PREDICTIVE MODELING 6
4.0 RECOMMENDED SIGNAGE/COMPLIANCE PLAN 7
5.0 SUMMARY AND CONCLUSIONS 8
6.0 LIMITATIONS 8

APPENDICES

Appendix A Personnel Certifications
Appendix B Compliance/Signage Plan

EXECUTIVE SUMMARY

Purpose of Report

EnviroBusiness Inc. (dba EBI Consulting) has been contracted by AT&T Mobility, LLC to conduct radio frequency electromagnetic (RF-EME) modeling for AT&T Site CRAN_RLOS_HBNPB_020 located at 3590 Harbor Gateway North in Costa Mesa, California to determine RF-EME exposure levels from proposed AT&T wireless communications equipment at this site. As described in greater detail in Section 1.0 of this report, the Federal Communications Commission (FCC) has developed Maximum Permissible Exposure (MPE) Limits for general public exposures and occupational exposures. This report summarizes the results of RF-EME modeling in relation to relevant FCC RF-EME compliance standards for limiting human exposure to RF-EME fields.

This report contains a detailed summary of the RF EME analysis for the site, including the following:

- Site Plan with antenna locations
- Graphical representation of theoretical MPE fields based on modeling
- Graphical representation of recommended signage and/or barriers

This document addresses the compliance of AT&T's transmitting facilities independently and in relation to all collocated facilities at the site.

Statement of Compliance

A site is considered out of compliance with FCC regulations if there are areas that exceed the FCC exposure limits <u>and</u> there are no RF hazard mitigation measures in place. Any carrier which has an installation that contributes more than 5% of the applicable MPE must participate in mitigating these RF hazards.

As presented in the sections below, based on worst-case predictive modeling, there are no modeled exposures on any accessible utility line level and ground walking/working surface related to ATT's proposed antennas that exceed the FCC's occupational and/or general public exposure limits at this site.

As such, the proposed AT&T installation is in compliance with FCC regulations upon proper installation of recommended signage and/or barriers.

AT&T Recommended Signage/Compliance Plan

AT&T's RF Exposure: Responsibilities, Procedures & Guidelines document, dated October 28, 2014, requires that:

1. All sites must be analyzed for RF exposure compliance;
2. All sites must have that analysis documented; and
3. All sites must have any necessary signage and barriers installed.

Site compliance recommendations have been developed based upon protocols presented in AT&T's RF Exposure: Responsibilities, Procedures & Guidelines document, dated October 28, 2014, additional guidance provided by AT&T, EBI's understanding of FCC and OSHA requirements, and common industry practice. Barrier locations have been identified (when required) based on guidance presented in AT&T's RF Exposure: Responsibilities, Procedures & Guidelines document, dated October 28, 2014.

The following signage is recommended at this site:

- Blue NOTICE decals posted around the bottom of the radome of the antenna.

The signage proposed for installation at this site complies with AT&T's RF Exposure: Responsibilities, Procedures & Guidelines document and therefore complies with FCC and OSHA requirements. Barriers are not recommended on this site. More detailed information concerning site compliance recommendations is presented in Section 4.0 and Appendix B of this report.

1.0 FEDERAL COMMUNICATIONS COMMISSION (FCC) REQUIREMENTS

The FCC has established Maximum Permissible Exposure (MPE) limits for human exposure to Radiofrequency Electromagnetic (RF-EME) energy fields, based on exposure limits recommended by the National Council on Radiation Protection and Measurements (NCRP) and, over a wide range of frequencies, the exposure limits developed by the Institute of Electrical and Electronics Engineers, Inc. (IEEE) and adopted by the American National Standards Institute (ANSI) to replace the 1982 ANSI guidelines. Limits for localized absorption are based on recommendations of both ANSI/IEEE and NCRP.

The FCC guidelines incorporate two separate tiers of exposure limits that are based upon occupational/controlled exposure limits (for workers) and general public/uncontrolled exposure limits for members of the general public.

Occupational/controlled exposure limits apply to situations in which persons are exposed as a consequence of their employment and in which those persons who are exposed have been made fully aware of the potential for exposure and can exercise control over their exposure. Occupational/ controlled exposure limits also apply where exposure is of a transient nature as a result of incidental passage through a location where exposure levels may be above general public/uncontrolled limits (see below), as long as the exposed person has been made fully aware of the potential for exposure and can exercise control over his or her exposure by leaving the area or by some other appropriate means.

General public/uncontrolled exposure limits apply to situations in which the general public may be exposed or in which persons who are exposed as a consequence of their employment may not be made fully aware of the potential for exposure or cannot exercise control over their exposure. Therefore, members of the general public would always be considered under this category when exposure is not employment-related, for example, in the case of a telecommunications tower that exposes persons in a nearby residential area.

Table 1 and Figure 1 (below), which are included within the FCC's OET Bulletin 65, summarize the MPE limits for RF emissions. These limits are designed to provide a substantial margin of safety. They vary by frequency to take into account the different types of equipment that may be in operation at a particular facility and are "time-averaged" limits to reflect different durations resulting from controlled and uncontrolled exposures.

The FCC's MPEs are measured in terms of power (mW) over a unit surface area (cm^2). Known as the power density, the FCC has established an occupational MPE of 5 milliwatts per square centimeter (mW/cm^2) and an uncontrolled MPE of 1 mW/cm2 for equipment operating in the 1900 MHz frequency range. For the AT&T equipment operating at 850 MHz, the FCC's occupational MPE is 2.83 mW/cm^2 and an uncontrolled MPE of 0.57 mW/cm^2. For the AT&T equipment operating at 700 MHz, the FCC's occupational MPE is 2.33 mW/cm^2 and an uncontrolled MPE of 0.47 mW/cm^2. These limits are considered protective of these populations.

Table 1: Limits for Maximum Permissible Exposure (MPE)

(A) Limits for Occupational/Controlled Exposure

Frequency Range (MHz)	Electric Field Strength (E) (V/m)	Magnetic Field Strength (H) (A/m)	Power Density (S) (mW/cm^2)	Averaging Time $[E]^2$, $[H]^2$, or S (minutes)
0.3-3.0	614	1.63	(100)*	6
3.0-30	1842/f	4.89/f	($900/f^2$)*	6
30-300	61.4	0.163	1.0	6
300-1,500	--	--	f/300	6

Table 1: Limits for Maximum Permissible Exposure (MPE)				
(A) Limits for Occupational/Controlled Exposure				
Frequency Range (MHz)	**Electric Field Strength (E) (V/m)**	**Magnetic Field Strength (H) (A/m)**	**Power Density (S) (mW/cm²)**	**Averaging Time [E]², [H]², or S (minutes)**
1,500-100,000	--	--	5	6
(B) Limits for General Public/Uncontrolled Exposure				
Frequency Range (MHz)	**Electric Field Strength (E) (V/m)**	**Magnetic Field Strength (H) (A/m)**	**Power Density (S) (mW/cm²)**	**Averaging Time [E]², [H]², or S (minutes)**
0.3-1.34	614	1.63	(100)*	30
1.34-30	824/f	2.19/f	$(180/f^2)$*	30
30-300	27.5	0.073	0.2	30
300-1,500	--	--	f/1,500	30
1,500-100,000	--	--	1.0	30

f = Frequency in (MHz)
* Plane-wave equivalent power density

Figure 1. FCC Limits for Maximum Permissible Exposure (MPE)
Plane-wave Equivalent Power Density

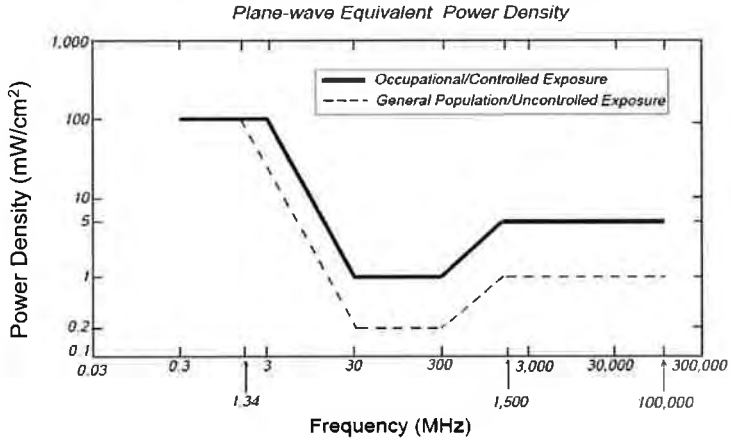

Based on the above, the most restrictive thresholds for exposures of unlimited duration to RF energy for several personal wireless services are summarized below:

Personal Wireless Service	Approximate Frequency	Occupational MPE	Public MPE
Personal Communication (PCS)	1,950 MHz	5.00 mW/cm²	1.00 mW/cm²
Cellular Telephone	870 MHz	2.90 mW/cm²	0.58 mW/cm²
Specialized Mobile Radio	855 MHz	2.85 mW/cm²	0.57 mW/cm²
Long Term Evolution (LTE)	700 MHz	2.33 mW/cm²	0.47 mW/cm²
Most Restrictive Freq. Range	30-300 MHz	1.00 mW/cm²	0.20 mW/cm²

MPE limits are designed to provide a substantial margin of safety. These limits apply for continuous exposures and are intended to provide a prudent margin of safety for all persons, regardless of age, gender, size, or health.

Personal Communication (PCS) facilities used by AT&T in this area operate within a frequency range of 700-1900 MHz. Facilities typically consist of: 1) electronic transceivers (the radios or cabinets) connected to wired telephone lines; and 2) antennas that send the wireless signals created by the transceivers to be received by individual subscriber units (PCS telephones). Transceivers are typically connected to antennas by coaxial cables.

Because of the short wavelength of PCS services, the antennas require line-of-site paths for good propagation, and are typically installed above ground level. Antennas are constructed to concentrate energy towards the horizon, with as little energy as possible scattered towards the ground or the sky. This design, combined with the low power of PCS facilities, generally results in no possibility for exposure to approach Maximum Permissible Exposure (MPE) levels, with the exception of areas directly in front of the antennas.

2.0 AT&T RF Exposure Policy Requirements

AT&T's RF Exposure: Responsibilities, Procedures & Guidelines document, dated October 28, 2014, requires that:

1. All sites must be analyzed for RF exposure compliance;
2. All sites must have that analysis documented; and
3. All sites must have any necessary signage and barriers installed.

Pursuant to this guidance, worst-case predictive modeling was performed for the site. This modeling is described below in Section 3.0. Lastly, based on the modeling and survey data, EBI has produced a Compliance Plan for this site that outlines the recommended signage and barriers. The recommended Compliance Plan for this site is described in Section 4.0.

3.0 WORST-CASE PREDICTIVE MODELING

In accordance with AT&T's RF Exposure policy, EBI performed theoretical modeling using RoofView® software to estimate the worst-case power density at the site utility line level and ground-level resulting from operation of the antennas. RoofView® is a widely-used predictive modeling program that has been developed by Richard Tell Associates to predict both near field and far field RF power density values for roof-top and tower telecommunications sites produced by vertical collinear antennas that are typically used in the cellular, PCS, paging and other communications services. The models utilize several operational specifications for different types of antennas to produce a plot of spatially-averaged power densities that can be expressed as a percentage of the applicable exposure limit.

For this report, EBI utilized antenna and power data provided by AT&T, and compared the resultant worst-case MPE levels to the FCC's occupational/controlled exposure limits outlined in OET Bulletin 65. For this report, EBI utilized antenna and power data provided by AT&T and compared the resultant worst-case MPE levels to the FCC's occupational/controlled exposure limits outlined in OET Bulletin 65. The assumptions used in the modeling are based upon information provided by AT&T and information gathered from other sources. There are no other wireless carriers with equipment installed at this site.

Based on worst-case predictive modeling, there are no modeled exposures on any accessible utility line level and ground walking/working surface related to ATT's proposed antennas that exceed the FCC's occupational and/or general public exposure limits at this site.

At the nearest walking/working surfaces to the AT&T antenna, the maximum power density generated by the AT&T antenna is approximately 57.10 percent of the FCC's general public limit (11.42 percent of the FCC's occupational limit). The composite exposure level from all carriers on this site is approximately 57.10 percent of the FCC's general public limit (11.42 percent of the FCC's occupational limit) at the nearest walking/working surface to each antenna. Based on worst-case predictive modeling, there are no areas at ground level related to the proposed AT&T antenna that exceed the FCC's occupational or general public exposure limits at this site. At ground level, the maximum power density generated by the antenna is approximately 1.00 percent of the FCC's general public limit (0.20 percent of the FCC's occupational limit).

A graphical representation of the RoofView® modeling results is presented in Appendix B. It should be noted that RoofView® is not suitable for modeling microwave dish antennas; however, these units are designed for point-to-point operations at the elevations of the installed equipment rather than ground-level coverage. Based on AT&T's RF Exposure: Responsibilities, Procedures & Guidelines document, dated October 28, 2014, microwave antennas are considered compliant if they are higher than 20 feet above any accessible walking/working surface. There are no microwaves installed at this site.

4.0 RECOMMENDED SIGNAGE/COMPLIANCE PLAN

Signs are the primary means for control of access to areas where RF exposure levels may potentially exceed the MPE. As presented in the AT&T guidance document, the signs must:

- Be posted at a conspicuous point;
- Be posted at the appropriate locations;
- Be readily visible; and
- Make the reader aware of the potential risks prior to entering the affected area.

The table below presents the signs that may be used for AT&T installations.

Informational Signs		Alerting Signs	
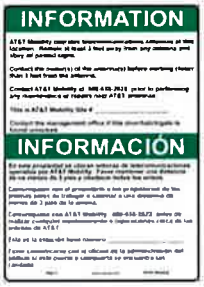	INFO 1	NOTICE 1	NOTICE 2
	INFO 2	NOTICE DECAL	
at&t	INFO 3	CAUTION 1 – ROOFTOP	CAUTION 2 - ROOFTOP
	INFO 4	CAUTION - TOWER	WARNING

Based upon protocols presented in AT&T's RF Exposure: Responsibilities, Procedures & Guidelines document, dated October 28, 2014, and additional guidance provided by AT&T, the following signage is recommended on the site:

- Blue NOTICE decals posted around the bottom of the radome of the antenna.

No barriers are required for this site. The signage is graphically represented in the Signage Plan presented in Appendix B.

5.0 SUMMARY AND CONCLUSIONS

EBI has prepared this Radiofrequency Emissions Compliance Report for the proposed AT&T telecommunications equipment at the site located at 3590 Harbor Gateway North in Costa Mesa, California.

EBI has conducted theoretical modeling to estimate the worst-case power density from AT&T antennas to document potential MPE levels at this location and ensure that site control measures are adequate to meet FCC and OSHA requirements, as well as AT&T's corporate RF safety policies. As presented in the preceding sections, based on worst-case predictive modeling, there are no modeled exposures on any accessible utility line level and ground walking/working surface related to ATT's proposed antennas that exceed the FCC's occupational and/or general public exposure limits at this site.

Signage is recommended at the site as presented in Section 4.0 and Appendix B. Posting of the signage brings the site into compliance with FCC rules and regulations and AT&T's corporate RF safety policies.

6.0 LIMITATIONS

This report was prepared for the use of AT&T Mobility, LLC to meet requirements outlined in AT&T's corporate RF safety guidelines. It was performed in accordance with generally accepted practices of other consultants undertaking similar studies at the same time and in the same locale under like circumstances. The conclusions provided by EBI are based solely on the information provided by the client. The observations in this report are valid on the date of the investigation. Any additional information that becomes available concerning the site should be provided to EBI so that our conclusions may be revised and modified, if necessary. This report has been prepared in accordance with Standard Conditions for Engagement and authorized proposal, both of which are integral parts of this report. No other warranty, expressed or implied, is made.

Appendix A

Personnel Certifications

Reviewed and Approved by:

REGISTERED PROFESSIONAL ENGINEER
MICHAEL A. McGUIRE
E18898
EXP. 30 SEP 19
ELECTRICAL
STATE OF CALIFORNIA

sealed 6jun2018

Michael McGuire
Electrical Engineer

Note that EBI's scope of work is limited to an evaluation of the Radio Frequency – Electromagnetic Energy (RF-EME) field generated by the antennas and broadcast equipment noted in this report. The engineering and design of the structure, as well as the impact of the antennas and broadcast equipment on the structural integrity of the structure, are specifically excluded from EBI's scope of work.

Preparer Certification

I, Ryan Eaton, state that:

- I am an employee of EnviroBusiness Inc. (d/b/a EBI Consulting), which provides RF-EME safety and compliance services to the wireless communications industry.
- I have successfully completed RF-EME safety training, and I am aware of the potential hazards from RF-EME and would be classified "occupational" under the FCC regulations.
- I am familiar with the FCC rules and regulations as well as OSHA regulations both in general and as they apply to RF-EME exposure.
- I have been trained in on the procedures outlined in AT&T's RF Exposure: Responsibilities, Procedures & Guidelines document (dated October 28, 2014) and on RF-EME modeling using RoofView® modeling software.
- I have reviewed the data provided by the client and incorporated it into this Site Compliance Report such that the information contained in this report is true and accurate to the best of my knowledge.

Appendix B

Compliance/Signage Plan

At the nearest walking/working surfaces to the AT&T antenna, the maximum power density generated by the AT&T antenna is approximately 57.10 percent of the FCC's general public limit (11.42 percent of the FCC's occupational limit). The composite exposure level from all carriers on this site is approximately 57.10 percent of the FCC's general public limit (11.42 percent of the FCC's occupational limit) at the nearest walking/working surface to each antenna. Based on worst-case predictive modeling, there are no areas at ground level related to the proposed AT&T antenna that exceed the FCC's occupational or general public exposure limits at this site. At ground level, the maximum power density generated by the AT&T antenna is approximately 1.00 percent of the FCC's general public limit (0.20 percent of the FCC's occupational limit).

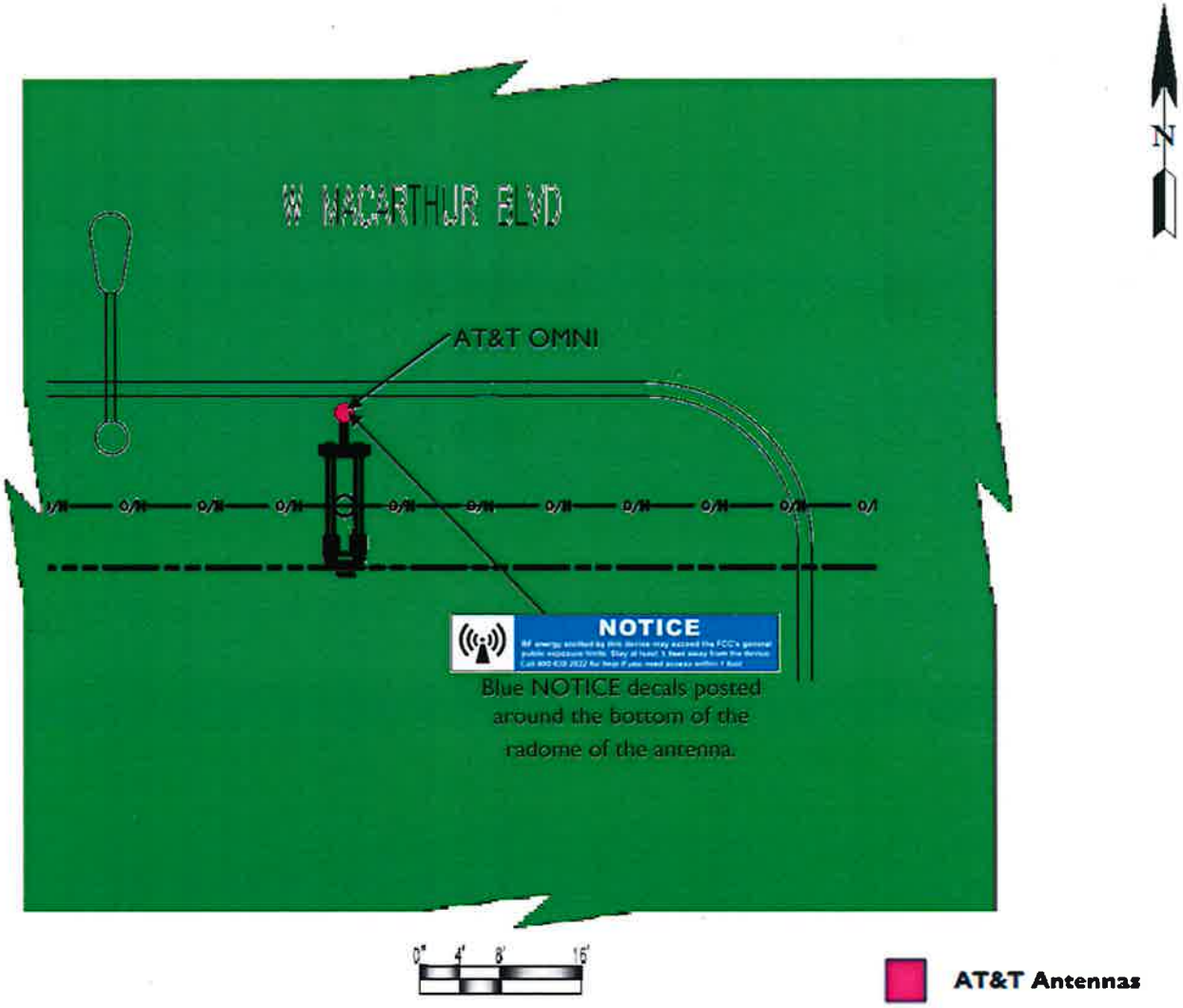

% FCC Public Exposure Limit	
	Exposure Level ≥ 5,000
	500 < Exposure Level ≤ 5,000
	100 < Exposure Level ≤ 500
	Exposure Level ≤ 100

Sign Identification Legend			
	Denotes AT&T Information Sign 1		Denotes AT&T NOTICE Sign
	Denotes AT&T Information Sign 2		Denotes AT&T CAUTION Sign
	Denotes AT&T Information Sign 3		Denotes AT&T CAUTION Tower Sign
	Denotes AT&T Information Sign 4		Denotes AT&T WARNING Sign

Compliance/Signage Plan

Facility Operator: AT&T Mobility
Site Name: HBNPB 20B
AT&T Site Number: CRAN_RLOS_HBNPB_020
USID Number: 188431
Report Date: 06-19-18

EBI Consulting
environmental | engineering | due diligence

Statement of CLEC and CPUC Status

New Cingular Wireless PCS LLC ("NCW") dba AT&T Mobility is a telephone corporation that provides wireless service in the City of Costa Mesa pursuant to a Wireless Identification Registration Number, U 3060 C, issued by the California Public Utilities Commission. Section 7901 of the California Public Utilities Code authorizes telephone corporations to construct facilities in the public right of way. Thus, as a registered wireless carrier, NCW is allowed to construct facilities in the public right of way.

NCW does not have and is not required to have a Certificate of Public Convenience and Necessity (CPCN). The CPUC terminated the requirement for wireless carriers to have CPCNs in 1994 and replaced it with the registration process. Please see Section 1013 of the Cal. Pub. Util. Code and attached letter from CPUC.

Under Cal. Pub. Utils. Code §§ 7901 & 7901.1 (excerpted below), AT&T has an affirmative right to deploy its facilities in public right-of-way subject to the city's police power to control the location and manner of an installation. The city police power, however, is limited, and it must exercise this authority in a reasonable and nondiscriminatory manner. See 7901.1.

PUBLIC UTILITIES CODE SECTION 7901-7901.1

7901. Telegraph or telephone corporations may construct lines of telegraph or telephone lines along and upon any public road or highway, along or across any of the waters or lands within this State, and may erect poles, posts, piers, or abutments for supporting the insulators, wires, and other necessary fixtures of their lines, in such manner and at such points as not to incommode the public use of the road or highway or interrupt the navigation of the waters.

7901.1. (a) It is the intent of the Legislature, consistent with Section 7901, that municipalities shall have the right to exercise reasonable control as to the time, place, and manner in which roads, highways, and waterways are accessed.
(b) The control, to be reasonable, shall, at a minimum, be applied to all entities in an equivalent manner.
(c) Nothing in this section shall add to or subtract from any existing authority with respect to the imposition of fees by municipalities.

STATE OF CALIFORNIA

ARNOLD SCHWARZENEGGER, GOVERNOR

PUBLIC UTILITIES COMMISSION
505 VAN NESS AVENUE
SAN FRANCISCO, CA 94102-3298

To: CMSR Registration Applicant

Subject: Information Required to Obtain Wireless Identification Registration (WIR) Number (U Number).

Dear Applicant,

For your information, Commission Decision 94-10-031, (issued on October 12, 1994) established a wireless registration process for all Commercial Mobile Radiotelephone Services (CMRS) providers within California. The Commission has eliminated the Certificate of Public Necessity and Convenience (CPCN) for all CMRS providers. This policy change is a result of action by Congress in the Omnibus Budget Reconciliation Act of 1993, which removed states authority to regulate entry and rates of CMRS providers effective August 10, 1994.

In lieu of the CPCN, the Commission now requires CMRS providers who did not hold a CPCN prior to August 10, 1994, and who intend to offer intrastate wireless telecommunications services within California, to file a Wireless Identification Registration containing the following information concurrent with undertaking such service. This information must be on company letterhead, type of service to be offered, and signed by at least one officer of the company.

1. The legal name of the business offering such service.
2. Any fictitious or other names under which such service will be offered.
3. The local business address for the utility, if any.
4. The home office business address if different than the local business address.
5. The name and address of the designated agent for service of process.
6. Name, title, address, and telephone number of the person to be contacted regarding the reported information.
7. The identity of the directors and principal officers of the business.
8. Names of all affiliated companies and their relationship, indicating if the affiliate is a regulated public utility.
9. Telephone numbers to which service or other customer complaints should be directed.

The information should be filed with the Telecommunications Division. Service can be commenced upon receiving the WIN from the CPUC. You should receive a WIN within a few days after the Commission receives the registration information.

Within 30 days of a change in the status of any of the information items listed above, the carrier shall notify the Telecommunications Division of such change in writing.

If you have questions or need further clarification please call Rudy Sastra at (415) 703-2673.

Sincerely,

Jack Leutza, Director
Telecommunications Division

PLEASE SEND THIS INFORMATION TO:

Rudy Sastra
Carrier Branch
Telecommunications Division
California Public Utilities Commission
505 Van Ness Avenue
San Francisco, CA 94102
(415) 703-2673

CRAN_RLOS_HBNPB_024

2850 Fairview Road
Costa Mesa, CA 92626

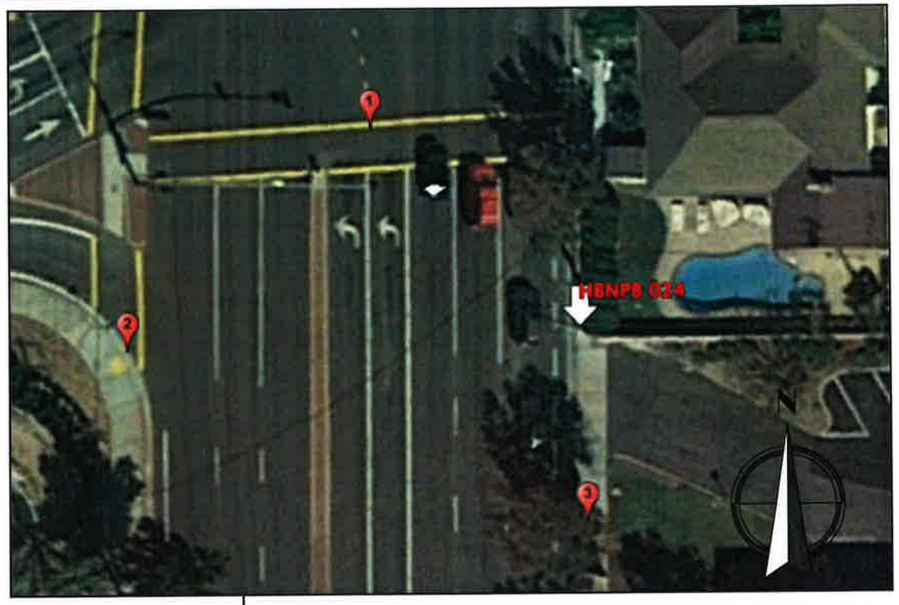

Location Map

Existing Site Conditions

Proposed Site Build

View 1

CRAN_RLOS_HBNPB_024

2850 Fairview Road
Costa Mesa, CA 92626

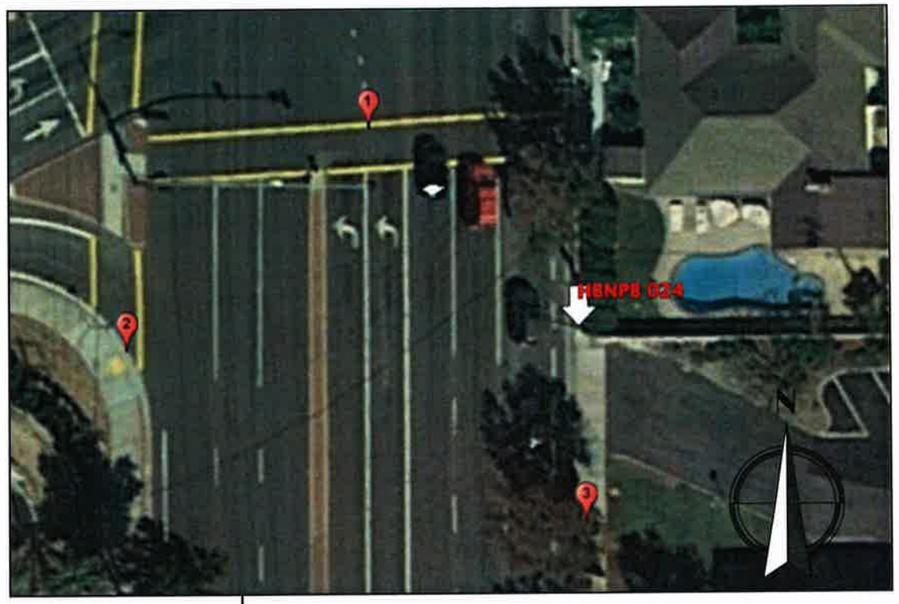

Location Map

Existing Site Conditions

Proposed Site Build

View 2

CRAN_RLOS_HBNPB_024

2850 Fairview Road
Costa Mesa, CA 92626

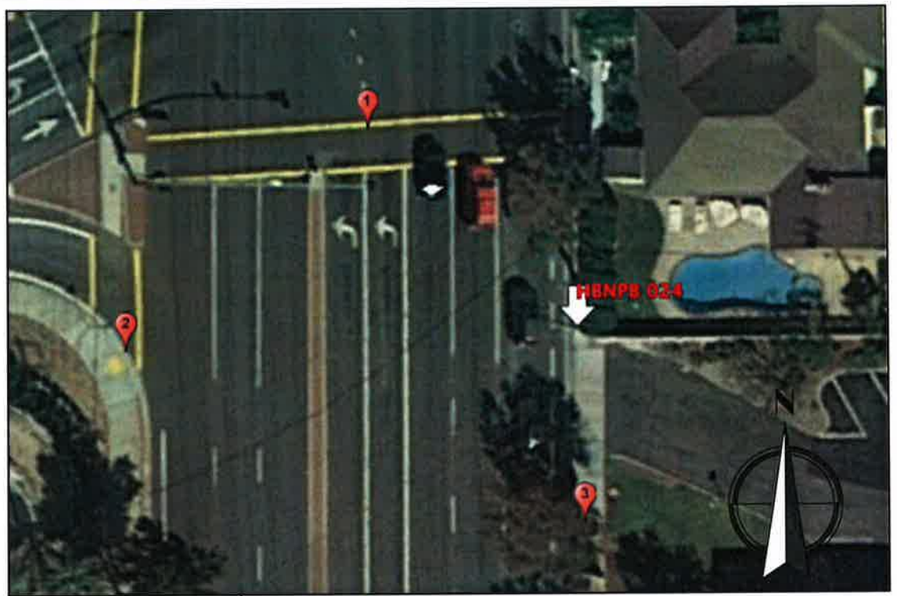

Location Map

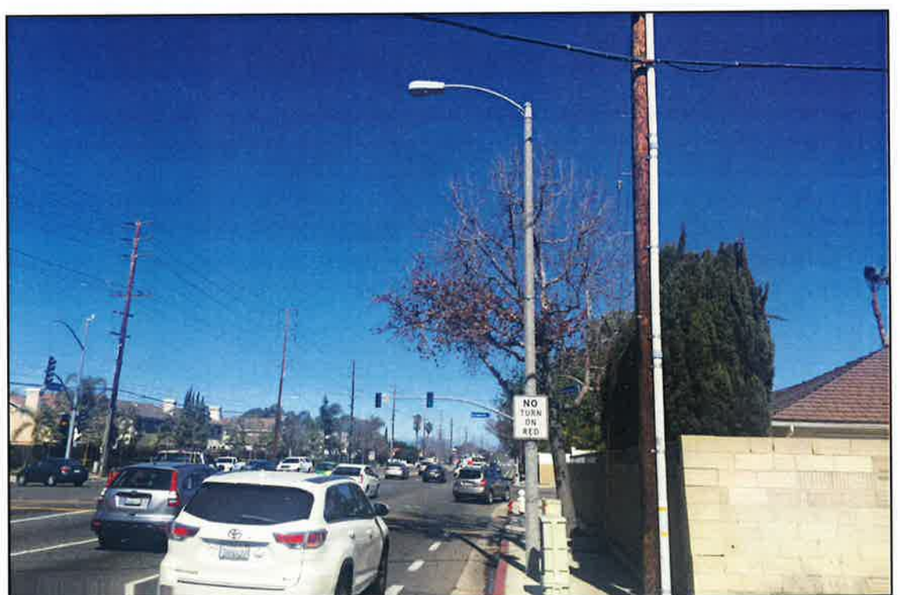

Existing Site Conditions

Proposed Site Build

View 3

SITE NAME: HBNPB 024
SITE NUMBER: CRAN_RLOS_HBNPB 024
PROJECT: CRAN/ SMALL CELL
USID: 188435
PACE: MRLOS045330

at&t

POLE TYPE: (N) CONCRETE LIGHT POLE
POLE ID #: 2047169E
SITE ADDRESS:2850 FAIRVIEW RD, COSTA MESA, CA 92626

MINOR CONDITIONAL USE PERMIT
ADMINISTRATIVE ADJUSTMENT NO. 2017-18-42
Approval in Concept
SUBJECT TO CONDITIONS
CITY OF COSTA MESA
PLANNING DEPT.
BY JWA DATE 12/05/18

APPROVALS

THE FOLLOWING PARTIES HEREBY APPROVE AND ACCEPT THESE DOCUMENTS & AUTHORIZE THE SUBCONTRACTOR TO PROCEED WITH THE CONSTRUCTION DESCRIBED HEREIN. ALL DOCUMENTS ARE SUBJECT TO REVIEW BY THE LOCAL BUILDING DEPARTMENT & MAY IMPOSE CHANGES OR MODIFICATIONS.

APPROVED BY:	INITIALS:	DATE:
AT&T RF ENGINEER:		
AT&T OPERATIONS:		
SITE ACQUISITION MANAGER:		
PROJECT MANAGER:		
ZONING VENDOR:		
LEASING VENDOR:		
CONSTRUCTION MANAGER:		
A/E MANAGER:		
PROPERTY OWNER:		
UTILITY MANAGER:		

PROJECT DESCRIPTION

AT&T PROPOSES TO INSTALL A NEW WIRELESS INSTALLATION LOCATED IN THE PUBLIC RIGHT OF WAY TO (N) CONCRETE LIGHT POLE.

THE SCOPE WILL CONSIST OF THE FOLLOWING:

* SCE TO REMOVE (1) EXISTING CONCRETE STREETLIGHT
* SCE TO INSTALL (1) 29'-3" CONCRETE STREETLIGHT
* AT&T TO INSTALL (4) NEW AT&T REMOTE RADIO UNITS
* AT&T TO INSTALL (1) NEW AT&T OMNI-DIRECTIONAL ANTENNA
* AT&T TO INSTALL (1) NEW AT&T 14" DIAMETER EQUIPMENT SHROUD
* AT&T TO INSTALL (1) NEW RAYCAP DISCONNECT
* AT&T TO INSTALL (1) NEW HANDHOLE

PROJECT SITE INFORMATION

PUBLIC/PRIVATE:	PUBLIC RIGHT-OF-WAY
ADDRESS:	2850 FAIRVIEW RD, COSTA MESA, CA ,92626
APPLICANT:	AT&T
ADDRESS:	1452 EDINGER AVE TUSTIN, CA 92780
LATITUDE (NAD 83):	33.675693
LONGITUDE (NAD 83):	-117.907622
LAT/LONG TYPE:	NAD-83
GROUND ELEVATION (NAVD 88)	±50.79'
ADJACENT TO APN #:	141-561-17
JURISDICTION:	CITY OF COSTA MESA
CURRENT ZONING:	PUBLIC RIGHT OF WAY
PROPOSED USE:	UNMANNED TELECOMMUNICATIONS
POWER COMPANY:	SCE
ADRESS:	1 INNOVATION WAY POMONA, CA 91768

PROJECT TEAM

PROJECT MANAGER:
M SQUARED WIRELESS
1387 CALLE AVANZADO
SAN CLEMENTE, CA 92673

SAC/ZONING/PERMITTING:
M SQUARED WIRELESS
1387 CALLE AVANZADO
SAN CLEMENTE, CA 92673

RF ENGINEER:
AT&T
1452 EDINGER AVE.
TUSTIN, CA 92618
CONTACT: KARLO DAVINAGRACIA
PHONE: (714) 586-7310
EMAIL: KD270J@ATT.COM

ENGINEER:
M SQUARED WIRELESS
1387 CALLE AVANZADO
SAN CLEMENTE, CA 92673

SENIOR TECHNICAL PROJECT MANAGER:
AT&T
1452 EDINGER AVE.
TUSTIN, CA 92618
CONTACT: OMAR MERE
PHONE: (562) 293-6429
EMAIL: OM5039@ATT.COM

AREA MAPS

VICINITY MAP

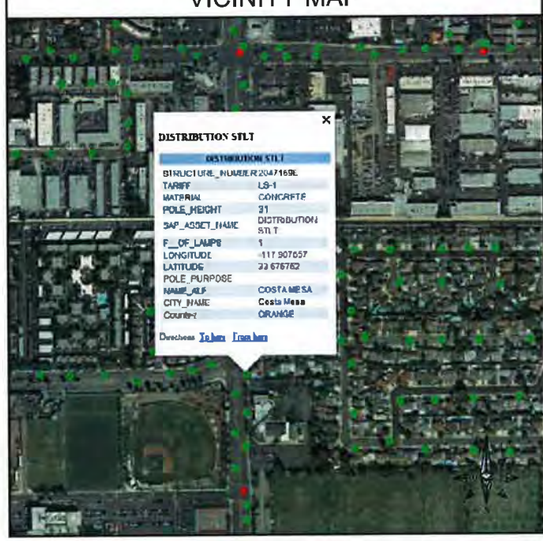

LOCATION MAP

DRIVING DIRECTIONS

DIRECTIONS FROM AT&T OFFICE:

DIRECTION ARE TAKEN FROM
1452 EDINGER AVE.
TUSTIN, CA 92780

1. TURN LEFT ONTO EDINGER AVE
2. TURN LEFT ONTO 55 S
3. TURN RIGHT ONTO 32ND ST
4. TURN RIGHT ONTO W BALBOA BLVD
5. TURN RIGHT ONTO 41ST ST
6. TURN LEFT AT THE 1ST CROSS ST ONTO SEASHORE
7. TURN LEFT AT THE 1ST CROSS STREET ONTO 40TH ST

DESTINATION WILL BE ON THE LEFT.
2850 FAIRVIEW RD,
COSTA MESA, CA 92626

DIG ALERT

811

Dig Alert
Know what's below.
Call before you dig.

CALIFORNIA SOUTH
Call Two Working Days Before You Dig!
811 / 800-227-2600

DO NOT SCALE DRAWINGS

SUBCONTRACTOR SHALL VERIFY ALL PLANS & EXISTING DIMENSIONS & CONDITIONS ON THE JOB SITE & SHALL IMMEDIATELY NOTIFY THE ENGINEER IN WRITING OF ANY DISCREPANCIES BEFORE PROCEEDING WITH THE WORK OR BE RESPONSIBLE FOR SAME.

CONSTRUCTION DRAWING

IF USING 11"x17" PLOT, DRAWING WILL BE HALF SCALE

DRAWING INDEX

SHEET NO:	SHEET TITLE
T-1	TITLE SHEET
GN-1	GENERAL NOTES
A-1	SITE PLAN
A-2	ELEVATIONS
A-3	ELEVATIONS
A-4	SITE IMAGE
D-1	DETAILS
S-1	POLE DETAILS
S-2	POLE FOUNDATION DETAILS
E-1	ELECTRICAL & GROUNDING DETAILS

CODE COMPLIANCE

ALL WORK AND MATERIALS SHALL BE PERFORMED AND INSTALLED IN ACCORDANCE WITH THE CURRENT EDITIONS OF THE FOLLOWING CODES AS ADOPTED BY THE LOCAL GOVERNING AUTHORITIES. NOTHING IN THESE PLANS IS TO BE CONSTRUCTED TO PERMIT WORK NOT CONFORMING TO THESE CODES.

1. 2016 CALIFORNIA ADMINISTRATIVE CODE
2. 2016 CALIFORNIA BUILDING CODE
3. 2016 CALIFORNIA ELECTRIC CODE
4. 2016 CALIFORNIA MECHANICAL CODE
5. 2016 CALIFORNIA PLUMBING CODE
6. 2016 CALIFORNIA FIRE CODE
7. ANY LOCAL BUILDING CODE AMENDMENTS TO THE ABOVE
8. CITY/COUNTY ORDINANCES

HANDICAP REQUIREMENTS:

FACILITY IS UNMANNED AND NOT FOR HUMAN HABITATION. HANDICAPPED ACCESS NOT REQUIRED IN ACCORDANCE WITH CALIFORNIA ADMINISTRATIVE STATE CODE PART 2, TITLE 24, CHAPTER 11B, SECTION 1103B.

GENERAL NOTES

THE FACILITY IS UNMANNED AND NOT FOR HUMAN HABITATION. A TECHNICIAN WILL VISIT THE SITE AS REQUIRED FOR ROUTINE MAINTENANCE. THE PROJECT WILL NOT RESULT IN ANY SIGNIFICANT DISTURBANCE OR EFFECT ON DRAINAGE: NO SANITARY SEWER SERVICE, POTABLE WATER, OR TRASH DISPOSAL IS REQUIRED AND NO COMMERCIAL SIGNAGE IS NEW.

at&t

ERICSSON
330 COMMERCE, STE. 200
IRVINE, CA 92602

M SQUARED WIRELESS
1387 CALLE AVANZADO
SAN CLEMENTE CA 92673 (949) 391-0024

DRAWN BY:	AMF
CHECKED BY:	MM

REV	DATE	DESCRIPTION
G	05/29/18	100% CONSTRUCTION
F	03/07/18	JX COMMENTS
E	02/16/18	100% CONSTRUCTION
D	02/05/18	100% CONSTRUCTION
C	12/15/17	100% CONSTRUCTION
B	12/01/17	CLIENT REVIEW
A	11/13/17	90% CONSTRUCTION

REGISTERED PROFESSIONAL ENGINEER
KARLO A. WARTON
C50547
STATE OF CALIFORNIA

IT IS A VIOLATION OF LAW FOR ANY PERSON, UNLESS THEY ARE ACTING UNDER THE DIRECTION OF A LICENSED PROFESSIONAL ENGINEER, TO ALTER THIS DOCUMENT.

SITE ID: HBNPB 024
2850 FAIRVIEW RD
COSTA MESA, CA, 92626

SHEET TITLE
TITLE SHEET

SHEET NUMBER
T-1

NEW ANTENNA	
EXISTING ANTENNA	
GROUND ROD	
GROUND BUS BAR	
MECHANICAL GRND. CONN.	
CADWELD	
GROUND ACCESS WELL	
ELECTRIC BOX	
TELEPHONE BOX	
LIGHT POLE	
FND. MONUMENT	
SPOT ELEVATION	
SET POINT	
REVISION	
GRID REFERENCE	
DETAIL REFERENCE	
ELEVATION REFERENCE	
SECTION REFERENCE	

GROUT OR PLASTER	
(E) BRICK	
(E) MASONRY	
CONCRETE	
EARTH	
GRAVEL	
PLYWOOD	
SAND	
WOOD CONT.	
WOOD BLOCKING	
STEEL	
CENTERLINE	
PROPERTY/LEASE LINE	
MATCH LINE	
WORK POINT	
GROUND CONDUCTOR	
COAXIAL CABLE	A
OVERHEAD SERVICE CONDUCTORS	OU
CHAIN LINK FENCING	X
OVERHEAD TELEPHONE/OVERHEAD POWER	OTP OPP
OVERHEAD TELEPHONE LINE	OT OT
OVERHEAD POWER LINE	OP OP
POWER RUN	E
FIBER/POWER RUN	F/P

TELCO RUN	T T
POWER/TELCO RUN	T/E
GROUNDING CONDUCTOR	G G
GROUNDING CONDUCTOR	
CONDUIT UNDERGROUND	
FUSE, SIZE AND TYPE AS INDICATED.	
SAFETY SWITCH, 2P-240V-60A W/60A FUSES, NEMA 3R ENCLOSURE, SQ D CATALOG NO. H222NRB	
MANUAL TRANSFER SWITCH, 2P-240V-200A, NO FUSE, NEMA 3R ENCLOSURE	
LIGHTING FIXTURE, FLUORESCENT, 10.94" x 4'-0", 2/40W, SURFACE MOUNTING TYPE, HUBBELL LIGHTING CATALOG #WSW232T	
LIGHTING FIXTURE, FLUORESCENT, 10.94" x 8'-0", 2/95W, SURFACE MOUNTING TYPE, HUBBELL LIGHTING CATALOG #TWSM232T	
LIGHTING FIXTURE, HIGH PRESSURE SODIUM, 1/70W, WALL MOUNTING TYPE, HUBBELL LIGHTING CATALOG #NRG-307 OR 1/50W, HUBBELL LIGHTING CATALOG #NRG-121	
EXIT SIGN, THERMOPLASTIC LED, SINGLE FACE, UNIVERSAL MOUNTING, W/BATTERY PACK, HUBBELL LIGHTING CATALOG #PRB	
COMBINATION, EXIT SIGN & EMERGENCY LIGHTING, HUBBELL LIGHTING CATALOG #PRC	EXIT
EMERGENCY LIGHTING, 2/50W, HUBBELL LIGHTING CATALOG #HE6-50-2-R91	
LIGHTING FIXTURE, INCANDESCENT, 1/100W, WALL MOUNTING TYPE, HUBBELL LIGHTING CATALOG #BRH-100-06-1	
LIGHTING FIXTURE, HALOGEN, QUARTZ, 1/300W, HUBBELL LIGHTING CATALOG #QL-505	
LIGHTING FIXTURE, 1/175W. METAL HALIDE, HUBBELL CAT #MIC-0175H-336	
5/8" X 10'-0" ,CU. GND ROD 30" MIN. BELOW GRADE.	

5/8" X 10'-0" ,CU. GND ROD IN TEST WELL 30" MIN. BELOW GRADE.	
CHEMICAL GROUND ROD (XIT GROUND ROD)	
CADWELD CONNECTION	
MECHANICAL CONNECTION	
HALO GROUND CONNECTION	
CIRCUIT BREAKER	
UTILITY METER BASE	
TRANSFORMER	
STEPDOWN TRANSFORMER	
RECEPTACLE, 2P-3W-125V-15A, DUPLEX, GROUND TYPE, HUBBEL CATALOG #5362	
TOGGLE SWITCH, 1P-125V-15A, HUBBELL CATALOG #HBL 1201CN	S
TOGGLE SWITCH, 1P-120V-15A, "WP"	S_{WP}
IONIZATION SMOKE DETECTOR W/ALARM HORN & AUXILIARY CONTACT, 120 VAC, GENTEX PART NO. 7100F	S
POLE	
(N) POLE MOUNTED XFMER	
(E) POLE MOUNTED XFMR	
(N) PAD MOUNTED XFMER	
(E) PAD MOUNTED XFMER	

ABBREVIATIONS

1

A	AMPERE
A.B.	ANCHOR BOLT
ABV.	ABOVE
AC	ALTERNATE CURRENT/AIR CONDITIONER
ACCA	ANTENNA CABLE COVER ASSEMBLY
ADD'L	ADDITIONAL
A.F.F.	ABOVE FINISHED FLOOR
A.F.G.	ABOVE FINISHED GRADE
AIC	AMPERE INTERRUPTING CAPACITY
ALUM.	ALUMINUM
ALT.	ALTERNATE
ANT.	ANTENNA
APPROX.	APPROXIMATE(LY)
ARCH.	ARCHITECT(URAL)
AT.	AMPERE TRIP
AWG.	AMERICAN WIRE GAUGE
BATT.	BATTERY
BD.	BOARD
BLDG.	BUILDING
BLK.	BLOCK
BLKG.	BLOCKING
BM.	BEAM
B.N.	BOUNDARY NAILING
BR.	BRANCH
BRKR.	BREAKER
BTCW.	BARE TINNED COPPER WIRE
BTS.	BASE TRANSMISSION SYSTEM
B.O.F.	BOTTOM OF FOOTING
B/U	BACK-UP CABINET
C	CONDUIT
CAB.	CABINET
CANT.	CANTILEVER(ED)
CB.	CIRCUIT BREAKER
CDMA	CODE-DIVISION MULTIPLE ACCESS (2G & 3G)
CDUK	CONSOLIDATION DISTRIBUTION UNIT KIT
C.I.P.	CAST IN PLACE
CKT.	CIRCUIT
CLG.	CEILING
CLR.	CLEAR
CMU	CONCRETE MASONRY UNIT (JAMB BLOCKS)
COL.	COLUMN
CONC.	CONCRETE
CONN.	CONNECTION(OR)
CONST.	CONSTRUCTION
CONT.	CONTINUOUS
d	PENNY (NAILS)
DBL.	DOUBLE
DC	DIRECT CURRENT
DEM.	DEMAND
DEPT.	DEPARTMENT
D.F.	DOUGLAS FIR
DIA.	DIAMETER
DIAG.	DIAGONAL
DIM.	DIMENSION
DWG.	DRAWING(S)
DWL.	DOWEL(S)
EA.	EACH
EGR.	EMERGENCY GENERATOR RECEPTACLE
EL.	ELEVATION
ELEC.	ELECTRICAL
ELEV.	ELEVATOR

EMT.	ELECTRICAL METALLIC TUBING
E.N.	EDGE NAIL
ENCL.	ENCLOSURE
ENG.	ENGINEER
EQ.	EQUAL
EXST.(E)	EXISTING
EXP.	EXPANSION
EXT.	EXTERIOR
FAB.	FABRICATION(OR)
FAC.	FACTOR
F/A	FIRE ALARM
F.F.	FINISH FLOOR
F.G.	FINISH GRADE
FIN.	FINISH(ED)
FLR.	FLOOR
FLUOR	FLUORESCENT
FDN.	FOUNDATION
F.O.C.	FACE OF CONCRETE
F.O.M.	FACE OF MASONRY
F.O.S.	FACE OF STUD
F.O.W.	FACE OF WALL
F.S.	FINISH SURFACE
FT.(')	FOOT (FEET)
FTG.	FOOTING
FU	FUSE
G	GROUND
GR	GROWTH (CABINET)
GA.	GAUGE
GEN.	GENERATOR
GI.	GALVANIZE(D)
G.F.C. I.	GROUND FAULT CIRCUIT INTERRUPTER
GLB. (GLU-LAM)	GLUE LAMINATED BEAM
GND	GROUND
GPS	GLOBAL POSITIONING SYSTEM
GRND.	GROUND
GSM	GLOBAL SYSTEM MOBILE (2G+ MOBILE TECH.)
HDBC	HARD DRAWN COPPER WIRE
HDR.	HEADER
HGR.	HANGER
HPS	HIGH PRESSURE SODIUM
HT.	HEIGHT
ICGB.	ISOLATED COPPER GROUND BUS
IN.(")	INCH(ES)
INT.	INTERIOR
LB.(#)	POUND(S)
L.B.	LAG BOLTS
L.F.	LINEAR FEET (FOOT)
LG.	LENGTH
L.	LONG(ITUDINAL)
LPS	LOW PRESSURE SODIUM
LTE	LONG TERM EVOLUTION (4G MOBILE TECH.)
MAS.	MASONRY
MAX.	MAXIMUM
M.B.	MACHINE BOLT
MECH.	MECHANICAL
MFR.	MANUFACTURER
MIN.	MINIMUM
MISC.	MISCELLANEOUS
MLO	MAIN LUGS ONLY

MTD.	MOUNTED
MTG.	MOUNTING
MTL.	METAL
MTS.	MANUAL TRANSFER SWITCH
N	NEUTRAL
(N)	NEW
NEMA	NATIONAL ELECTRICAL MANUFACTURERS ASSOC.
NO.(#)	NUMBER
N.T.S.	NOT TO SCALE
OBIF	OPTICAL BASEBAND INTERFACE
OH	OVERHEAD
O.C.	ON CENTER
OPNG.	OPENING
P	POLE
P/C	PRECAST CONCRETE
PCS	PERSONAL COMMUNICATION SERVICES
PH	PHASE
PLY.	PLYWOOD
PNLBD	PANELBOARD
PPC	POWER PROTECTION CABINET
PRC	PRIMARY RADIO CABINET
PRI	PRIMARY
P.S.F.	POUNDS PER SQUARE FOOT
P.S.I.	POUNDS PER SQUARE INCH
P.T.	PRESSURE TREATED
PWR.	POWER (CABINET)
QTY.	QUANTITY
RAD.(R)	RADIUS
RBS	RADIO BASE STATION (BASE STATION 3G NETWORKS)
RCPT.	RECEPTACLE
REF.	REFERENCE
REINF.	REINFORCEMENT(ING)
REQ'D.	REQUIRED
RGS.	RIGID GALVANIZED STEEL
RRU	REMOTE RADIO UNIT (RADIO TRANSCEIVER)
RX-AIT	RECEIVER AIR INTERFACE TRAY
SAF	SAFETY
SCH.	SCHEDULE
SDBC	SOFT DRAWN BARE COPPER
SEC	SECONDARY
SHT.	SHEET
SIM.	SIMILAR
S.N.	SOLID NEUTRAL
SPEC.	SPECIFICATION(S)
SQ.	SQUARE
S.S.	STAINLESS STEEL
STD.	STANDARD
STL.	STEEL
STRUC.	STRUCTURAL
SURF	SURFACE
SW	SWITCH
TEL.	TELEPHONE
TEMP.	TEMPORARY
THK.	THICK(NESS)
TMAS	TOWER MOUNTED AMPLIFIER (DC SUPPLY VOLTAGE)
T.N.	TOE NAIL
T.O.A.	TOP OF ANTENNA
T.O.C.	TOP OF CURB

T.O.F.	TOP OF FOUNDATION
T.O.P.	TOP OF PLATE (PARAPET)
T.O.S.	TOP OF STEEL
T.O.W.	TOP OF WALL
TYP.	TYPICAL
U.G.	UNDER GROUND
U.L.	UNDERWRITERS LABORATORY INC.
UMTS	UNIVERSAL MOBIL TECH. SYS. (3G MOBILE TECH.)
U.N.O.	UNLESS NOTED OTHERWISE
V	VOLT
VAC	VOLT ALTERNATING CURRENT
V.I.F.	VERIFY IN FIELD
W	WATT OR WIRE
WD	WIDE(WIDTH)
W/	WITH
W/O	WITHOUT
WD.	WOOD
W.P.	WEATHERPROOF
WT.	WEIGHT
XFER	TRANSFER
XFMR	TRANSFORMER
XLPE	CROSS-LINK POLYETHYLENE
℄	CENTERLINE
⅊	PLATE, PROPERTY LINE

ABBREVIATIONS

2

NOTES FOR EXISTING AT&T CELL SITES:

1. PRIOR TO THE SUBMISSION OF BIDS, THE BIDDING SUBCONTRACTOR SHALL VISIT THE CELL SITE TO FAMILIARIZE WITH THE EXISTING CONDITIONS AND TO CONFIRM THAT THE WORK CAN BE ACCOMPLISHED AS SHOWN ON THE CONSTRUCTION DRAWINGS. ANY DISCREPANCY FOUND SHALL BE BROUGHT TO THE ATTENTION OF CONTRACTOR.
2. SUBCONTRACTOR SHALL VERIFY ALL EXISTING DIMENSIONS AND CONDITIONS PRIOR TO COMMENCING ANY WORK. ALL DIMENSIONS OF EXISTING CONSTRUCTION SHOWN ON THE DRAWINGS MUST BE VERIFIED. SUBCONTRACTOR SHALL NOTIFY THE CONTRACTOR OF ANY DISCREPANCIES PRIOR TO ORDERING MATERIAL OR PROCEEDING WITH CONSTRUCTION.
3. THE EXISTING CELL SITE IS IN FULL COMMERCIAL OPERATION. ANY CONSTRUCTION WORK BY SUBCONTRACTOR SHALL NOT DISRUPT THE EXISTING NORMAL OPERATION. ANY WORK ON EXISTING EQUIPMENT MUST BE COORDINATED WITH CONTRACTOR. ALSO, WORK SHOULD BE SCHEDULED FOR AN APPROPRIATE MAINTENANCE WINDOW USUALLY IN LOW TRAFFIC PERIODS AFTER MIDNIGHT.
4. SINCE THE CELL SITE IS ACTIVE, ALL SAFETY PRECAUTIONS MUST BE TAKEN WHEN WORKING AROUND HIGH LEVELS OF ELECTROMAGNETIC RADIATION. EQUIPMENT SHOULD BE SHUTDOWN PRIOR TO PERFORMING ANY WORK THAT COULD EXPOSE THE WORKERS TO DANGER. PERSONAL RF EXPOSURE MONITORS ARE ADVISED TO BE WORN TO ALERT OF ANY DANGEROUS EXPOSURE LEVELS.
5. SUBCONTRACTOR SHALL DETERMINE ACTUAL ROUTING OF CONDUIT, POWER AND T1 CABLES, GROUNDING CABLES AS SHOWN ON THE POWER, GROUNDING AND TELCO PLAN DRAWING. SUBCONTRACTOR SHALL UTILIZE EXISTING TRAYS AND/OR SHALL ADD NEW TRAYS AS NECESSARY. SUBCONTRACTOR SHALL CONFIRM THE ACTUAL ROUTING WITH THE CONTRACTOR.
6. SUBCONTRACTOR SHALL LEGALLY AND PROPERLY DISPOSE OF ALL SCRAP MATERIALS SUCH AS COAXIAL CABLES AND OTHER ITEMS REMOVED FROM THE EXISTING FACILITY. ANTENNAS REMOVED SHALL BE RETURNED TO THE OWNER'S DESIGNATED LOCATION.

EXISTING AT&T CELL SITE NOTES

3

1. THE FACILITY IS AN UNOCCUPIED DIGITAL TELECOMMUNICATION FACILITY.
2. PLANS ARE NOT TO BE SCALED AND ARE INTENDED TO BE A DIAGRAMMATIC OUTLINE ONLY, UNLESS NOTED OTHERWISE. THE WORK SHALL INCLUDE FURNISHING MATERIALS, EQUIPMENT, APPURTENANCES AND LABOR NECESSARY TO COMPLETE ALL INSTALLATIONS AS INDICATED ON THE DRAWINGS.
3. PRIOR TO THE SUBMISSION OF BIDS, THE CONTRACTORS SHALL VISIT THE JOB SITE AND BE RESPONSIBLE FOR ALL CONTRACT DOCUMENTS, FIELD CONDITIONS AND DIMENSIONS, AND CONFIRMING THAT THE WORK MAY BE ACCOMPLISHED AS SHOWN PRIOR TO PROCEEDING WITH CONSTRUCTION. ANY DISCREPANCIES ARE TO BE BROUGHT TO THE ATTENTION OF THE IMPLEMENTATION ENGINEER AND ENGINEER PRIOR TO PROCEEDING WITH THE WORK.
4. THE CONTRACTOR SHALL OBTAIN, IN WRITING, AUTHORIZATION TO PROCEED BEFORE STARTING WORK ON ANY ITEM NOT CLEARLY DEFINED OR IDENTIFIED BY THE CONTRACT DOCUMENTS.
5. THE CONTRACTOR SHALL INSTALL ALL EQUIPMENT AND MATERIALS IN ACCORDANCE WITH MANUFACTURER'S RECOMMENDATIONS UNLESS SPECIFICALLY INDICATED OTHERWISE OR WHERE LOCAL CODES OR REGULATIONS TAKE PRECEDENCE.
6. ALL WORK PERFORMED AND MATERIALS INSTALLED SHALL BE IN STRICT ACCORDANCE WITH ALL APPLICABLE CODES, REGULATIONS AND ORDINANCES. CONTRACTOR SHALL GIVE ALL NOTICES AND COMPLY WITH ALL LAWS, ORDINANCES, RULES, REGULATIONS AND LAWFUL ORDERS OF ANY PUBLIC AUTHORITY REGARDING THE PERFORMANCE OF THE WORK. MECHANICAL AND ELECTRICAL SYSTEMS SHALL BE INSTALLED IN ACCORDANCE WITH ALL APPLICABLE MUNICIPAL AND UTILITY COMPANY SPECIFICATIONS, AND LOCAL AND STATE JURISDICTIONAL CODES, ORDINANCES AND APPLICABLE REGULATIONS.
7. THE GENERAL CONTRACTOR SHALL SUPERVISE AND DIRECT THE WORK, USING THE BEST SKILLS AND ATTENTION. THE CONTRACTOR SHALL BE SOLELY RESPONSIBLE FOR ALL CONSTRUCTION MEANS, METHODS, TECHNIQUES, SEQUENCES AND PROCEDURES AND FOR COORDINATING ALL PORTIONS OF THE WORK UNDER THE CONTRACT INCLUDING CONTACT AND COORDINATION WITH THE IMPLEMENTATION ENGINEER AND WITH THE LANDLORD'S AUTHORIZED REPRESENTATIVE.
8. SEAL PENETRATIONS THROUGH FIRE RATED AREAS WITH U.L. LISTED AND FIRE CODE APPROVED MATERIALS.
9. PROVIDE A PORTABLE FIRE EXTINGUISHER WITH A RATING OF NOT LESS THAN 2-A OR 2-A10BC WITHIN 75 FEET TRAVEL DISTANCE TO ALL PORTIONS OF THE PROJECT AREA DURING CONSTRUCTION.
10. DETAILS ARE INTENDED TO SHOW END RESULT OF DESIGN. MINOR MODIFICATIONS MAY BE REQUIRED TO SUIT JOB DIMENSIONS OR CONDITIONS, AND SUCH MODIFICATIONS SHALL BE INCLUDED AS PART OF THE WORK.
11. REPRESENTATIONS OF TRUE NORTH, OTHER THAN THOSE FOUND ON THE PLOT OF SURVEY DRAWING (SHEET LS1 OR SHEET C-1), SHALL NOT BE USED TO IDENTIFY OR ESTABLISH THE BEARING OF TRUE NORTH AT THE SITE. THE CONTRACTOR SHALL RELY SOLELY ON THE PLOT OF SURVEY DRAWING AND ANY SURVEYOR'S MARKINGS AT THE SITE FOR THE ESTABLISHMENT OF TRUE NORTH, AND SHALL NOTIFY THE ENGINEER PRIOR TO PROCEEDING WITH THE WORK IF ANY DISCREPANCY IS FOUND BETWEEN THE VARIOUS ELEMENTS OF THE WORKING DRAWINGS AND THE TRUE NORTH ORIENTATION AS DEPICTED ON THE CIVIL SURVEY. THE CONTRACTOR SHALL ASSUME SOLE LIABILITY FOR ANY FAILURE TO NOTIFY THE ENGINEER.
12. THE CONTRACTOR SHALL MAKE NECESSARY PROVISIONS TO PROTECT EXISTING IMPROVEMENTS, PAVING, CURBS, VEGETATION, GALVANIZED SURFACES, ETC., AND UPON COMPLETION OF WORK REPAIR ANY DAMAGE THAT OCCURRED DURING CONSTRUCTION TO THE SATISFACTION OF AT&T.
13. KEEP GENERAL AREA CLEAN, HAZARD FREE, AND DISPOSE OF ALL DIRT, DEBRIS, RUBBISH AND REMOVE EQUIPMENT NOT SPECIFIED AS REMAINING ON THE PROPERTY. LEAVE PREMISES IN CLEAN CONDITION AND FREE FROM PAINT SPOTS, DUST OR SMUDGES OF ANY NATURE.
14. PENETRATIONS OF ROOF MEMBRANES SHALL BE PATCHED/FLASHED AND MADE WATERTIGHT USING LIKE MATERIALS IN ACCORDANCE WITH NRCA ROOFING STANDARDS AND DETAILS. CONTRACTOR SHALL OBTAIN DETAILING CLARIFICATION FOR SITE-SPECIFIC CONDITIONS FROM ENGINEER, IF NECESSARY, BEFORE PROCEEDING.
15. BEFORE ORDERING AND/OR BEFORE FABRICATING/CONSTRUCTING/INSTALLING ANY ITEMS, VERIFY THE TYPES AND QUANTITIES.
16. CONTRACTOR SHALL PROVIDE SITE FOREMAN WITH A CELLULAR PHONE AND PAGER, AND KEEP SAME ON SITE WHENEVER PERSONNEL ARE ON SITE.
17. THE CONTRACTOR SHALL VERIFY ALL DIMENSIONS AND CONDITIONS ON THE SITE AND NOTIFY THE PROJECT MANAGER OF ANY DISCREPANCIES BEFORE STARTING ANY WORK.
18. CONTRACTOR TO PROVIDE COMPLETE SET OF AS BUILT DRAWINGS WITHIN 10 WORKING DAYS OF PROJECT COMPLETION.
19. CONTRACTOR IS TO EXCAVATE 6" BELOW EXISTING GRADE AND SPRAY WITH WEED CONTROL. REPLACE WITH CLASS II AGGREGATE BASE AND CRUSHED WASHED ROCK. AS SPECIFIED ON SITE PLAN.
20. CONTRACTOR SHALL PROVIDE TOILET FACILITY DURING ALL PHASES OF CONSTRUCTION.
21. PRIOR TO THE COMMENCEMENT OF CONSTRUCTION OR THE FABRICATION OF MATERIALS TO BE INSTALLED AT THE SITE, THE CONTRACTOR SHALL FIELD VERIFY ALL DIMENSIONS INCLUDING AS-BUILT DIMENSIONS OF EXISTING STRUCTURES OR STRUCTURAL ELEMENTS HAVING A BEARING ON THE SCOPE OF THE WORK TO BE PERFORMED. IF ANY DISCREPANCY IS FOUND BETWEEN THE VARIOUS ELEMENTS OF THE WORKING DRAWINGS AND THE DIMENSIONS OR CONDITIONS FOUND TO BE EXISTING IN THE FIELD, THE CONTRACTOR SHALL NOTIFY THE ENGINEER AND OBTAIN DESIGN RESOLUTION PRIOR TO PROCEEDING WITH THE PORTION(S) OF THE WORK AFFECTED. THE CONTRACTOR SHALL ASSUME SOLE LIABILITY FOR ANY FAILURE TO SO NOTIFY THE ENGINEER AND OBTAIN RESOLUTION BEFORE PROCEEDING.

GENERAL NOTES

4

at&t

ERICSSON
330 COMMERCE, STE. 200
IRVINE, CA 92602

M SQUARED WIRELESS
1367 CALLE AVANZADO
SAN CLEMENTE CA 92673 (949) 361-6234

DRAWN BY:	AMF
CHECKED BY:	MM

REV	DATE	DESCRIPTION
G	05/29/18	100% CONSTRUCTION
F	03/07/18	JX COMMENTS
E	02/16/18	100% CONSTRUCTION
D	02/05/18	100% CONSTRUCTION
C	12/15/17	100% CONSTRUCTION
B	12/01/17	CLIENT REVIEW
A	11/13/17	90% CONSTRUCTION

REGISTERED PROFESSIONAL ENGINEER
STALL A. WHARTON
C50547
CIVIL
STATE OF CALIFORNIA

IT IS A VIOLATION OF LAW FOR ANY PERSON, UNLESS THEY ARE ACTING UNDER THE DIRECTION OF A LICENSED PROFESSIONAL ENGINEER, TO ALTER THIS DOCUMENT.

SITE ID: HBNPB 024
2850 FAIRVIEW RD
COSTA MESA, CA, 92626

SHEET TITLE
GENERAL NOTES

SHEET NUMBER
GN-1

[redacted]

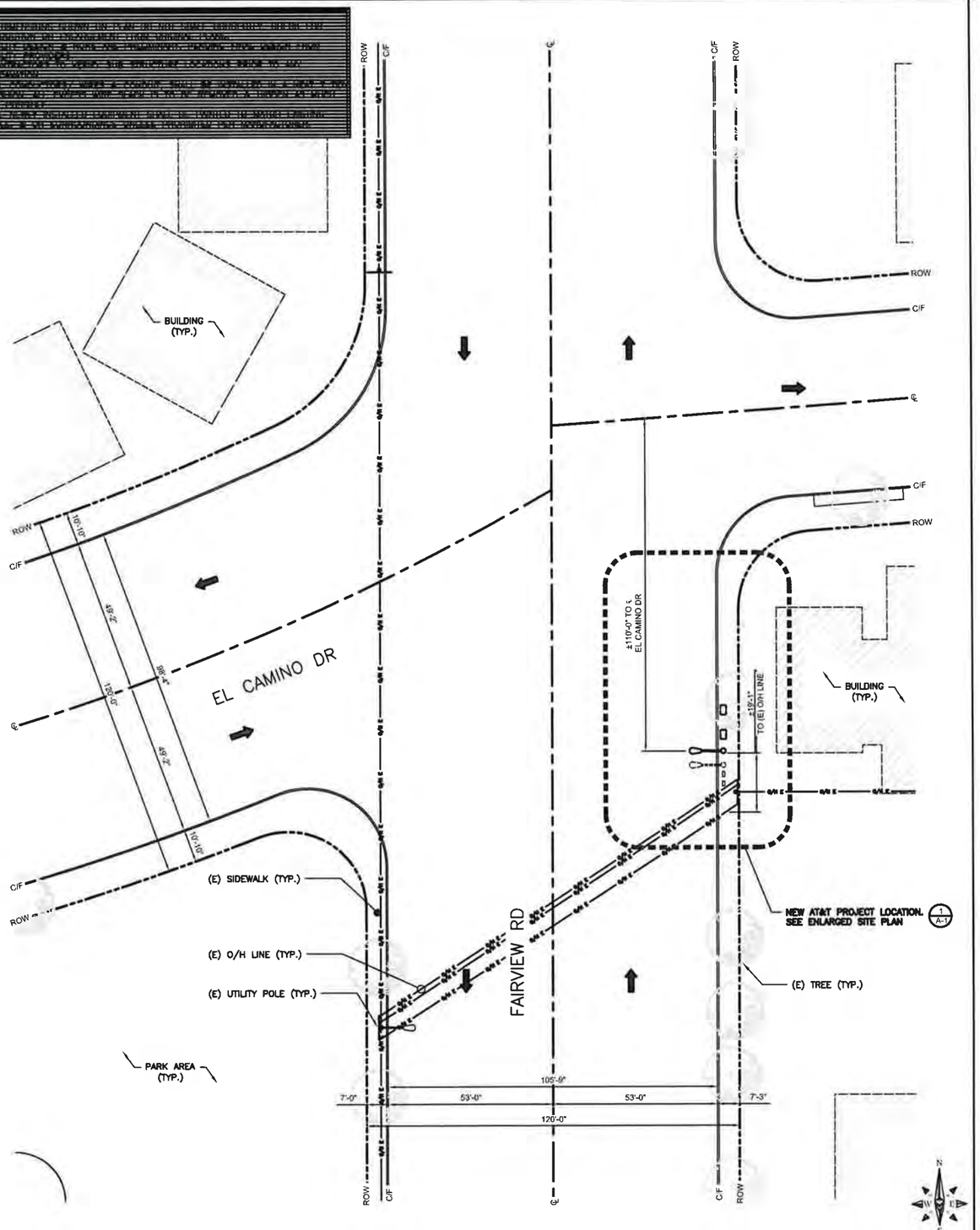

SITE PLAN

24"x36" SCALE: 1" = 20'-0"
11"x17" SCALE: 1" = 40'-0"

0" 10' 20' 40'

3

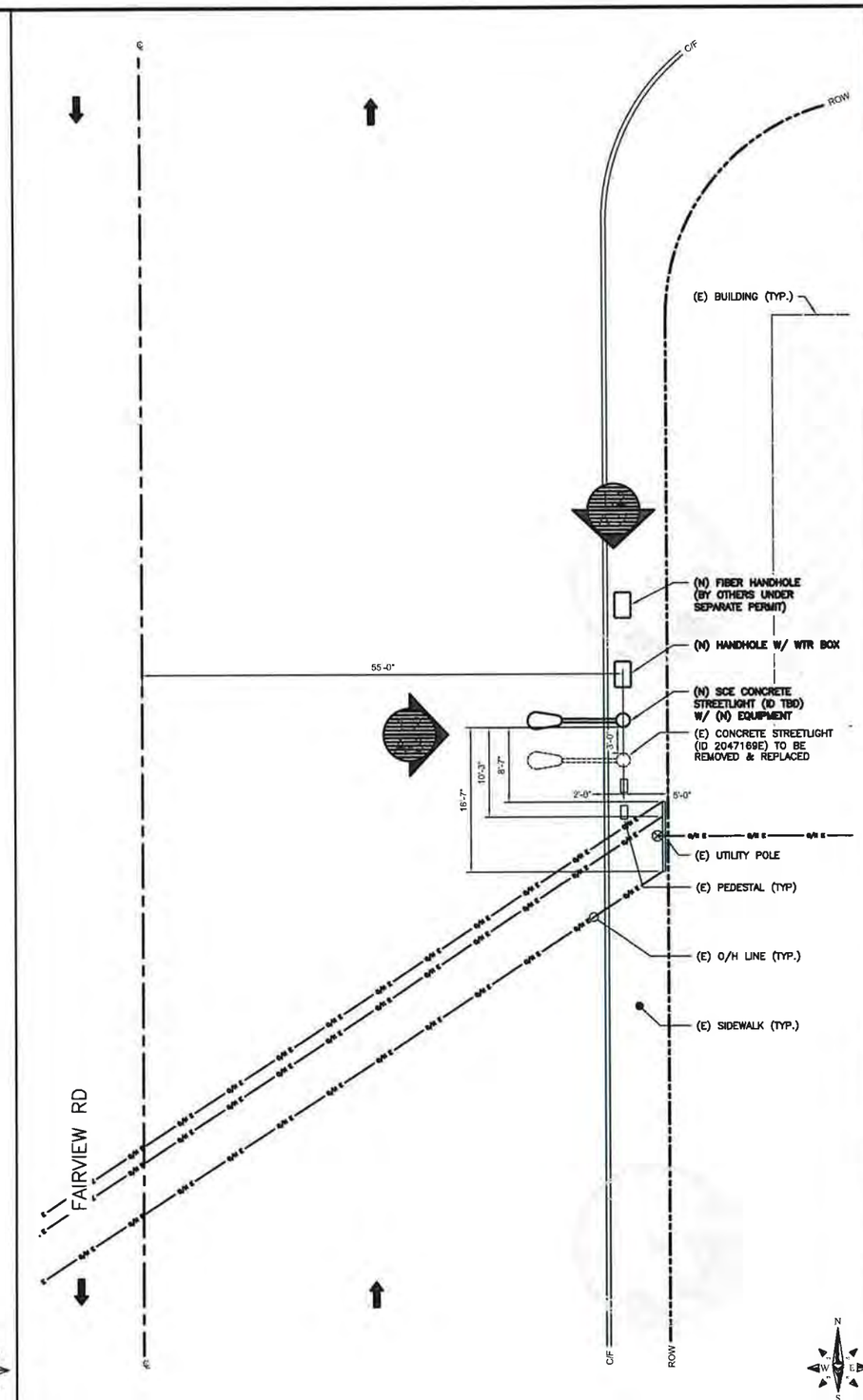

ENLARGED SITE PLAN

24"x36" SCALE: 1/8" = 1'-0"
11"x17" SCALE: 1/16" = 1'-0"

0" 4' 8' 16'

2

at&t

ERICSSON
330 COMMERCE, STE. 200
IRVINE, CA 92602

M SQUARED WIRELESS
1367 CALLE AVANZADO
SAN CLEMENTE CA 92673 (949) 201-0024

DRAWN BY:	AMF
CHECKED BY:	MM

REV	DATE	DESCRIPTION
G	05/29/18	100% CONSTRUCTION
F	03/07/18	JX COMMENTS
E	02/16/18	100% CONSTRUCTION
D	02/05/18	100% CONSTRUCTION
C	12/15/17	100% CONSTRUCTION
B	12/01/17	CLIENT REVIEW
A	11/13/17	90% CONSTRUCTION

REGISTERED PROFESSIONAL ENGINEER
RYAN A. WHARTON
C50547
CIVIL
STATE OF CALIFORNIA

IT IS A VIOLATION OF LAW FOR ANY PERSON, UNLESS THEY ARE ACTING UNDER THE DIRECTION OF A LICENSED PROFESSIONAL ENGINEER TO ALTER THIS DOCUMENT.

SITE ID: HBNPB 024
2850 FAIRVIEW RD
COSTA MESA, CA, 92626

SHEET TITLE
SITE PLAN

SHEET NUMBER
A-1

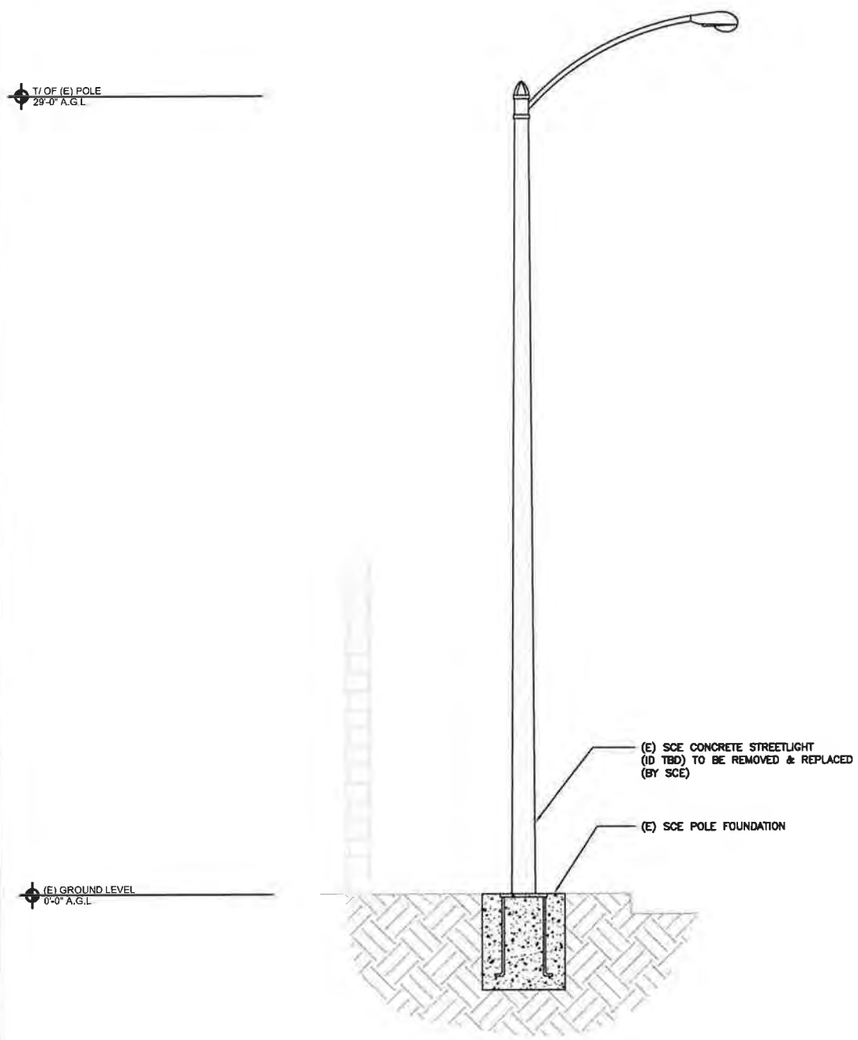

EXISTING NORTH ELEVATION

24"x36" SCALE: 3/8" = 1'-0"
11"x17" SCALE: 3/16" = 1'-0"

0" 1' 2' 4'

2

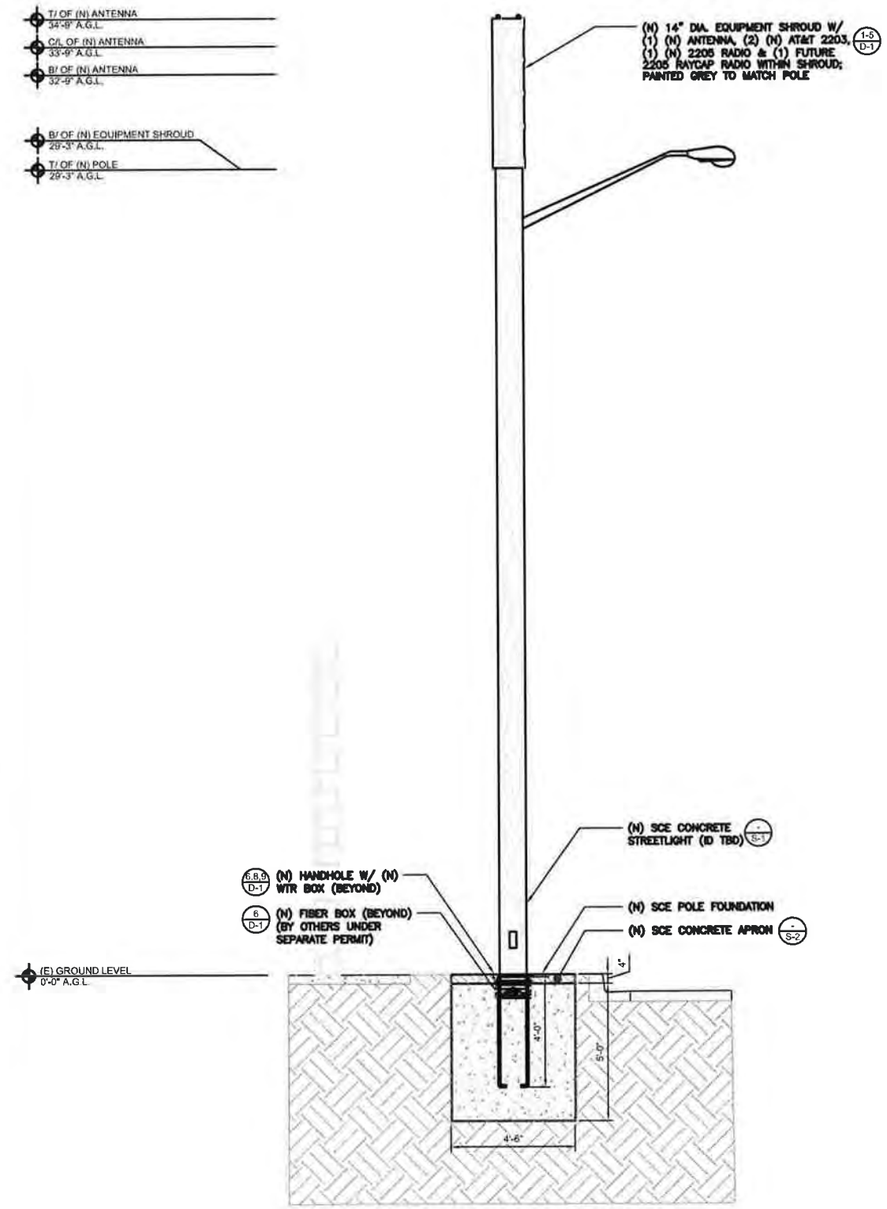

NEW NORTH ELEVATION

24"x36" SCALE: 3/8" = 1'-0"
11"x17" SCALE: 3/16" = 1'-0"

0" 1' 2' 4'

1

at&t

ERICSSON
330 COMMERCE, STE. 200
IRVINE, CA 92602

M SQUARED WIRELESS
1367 CALLE AVANZADO
SAN CLEMENTE CA 92673 (949) 391-9934

DRAWN BY:	AMF
CHECKED BY:	MM

REV	DATE	DESCRIPTION
G	05/29/18	100% CONSTRUCTION
F	03/07/18	JX COMMENTS
E	02/16/18	100% CONSTRUCTION
D	02/05/18	100% CONSTRUCTION
C	12/15/17	100% CONSTRUCTION
B	12/01/17	CLIENT REVIEW
A	11/13/17	90% CONSTRUCTION

REGISTERED PROFESSIONAL ENGINEER
GRAYDON A. WHARTON
C50547
CIVIL
STATE OF CALIFORNIA

IT IS A VIOLATION OF LAW FOR ANY PERSON, UNLESS THEY ARE ACTING UNDER THE DIRECTION OF A LICENSED PROFESSIONAL ENGINEER, TO ALTER THIS DOCUMENT.

SITE ID: HBNPB 024
2850 FAIRVIEW RD
COSTA MESA, CA, 92626

SHEET TITLE
ELEVATIONS

SHEET NUMBER
A-2

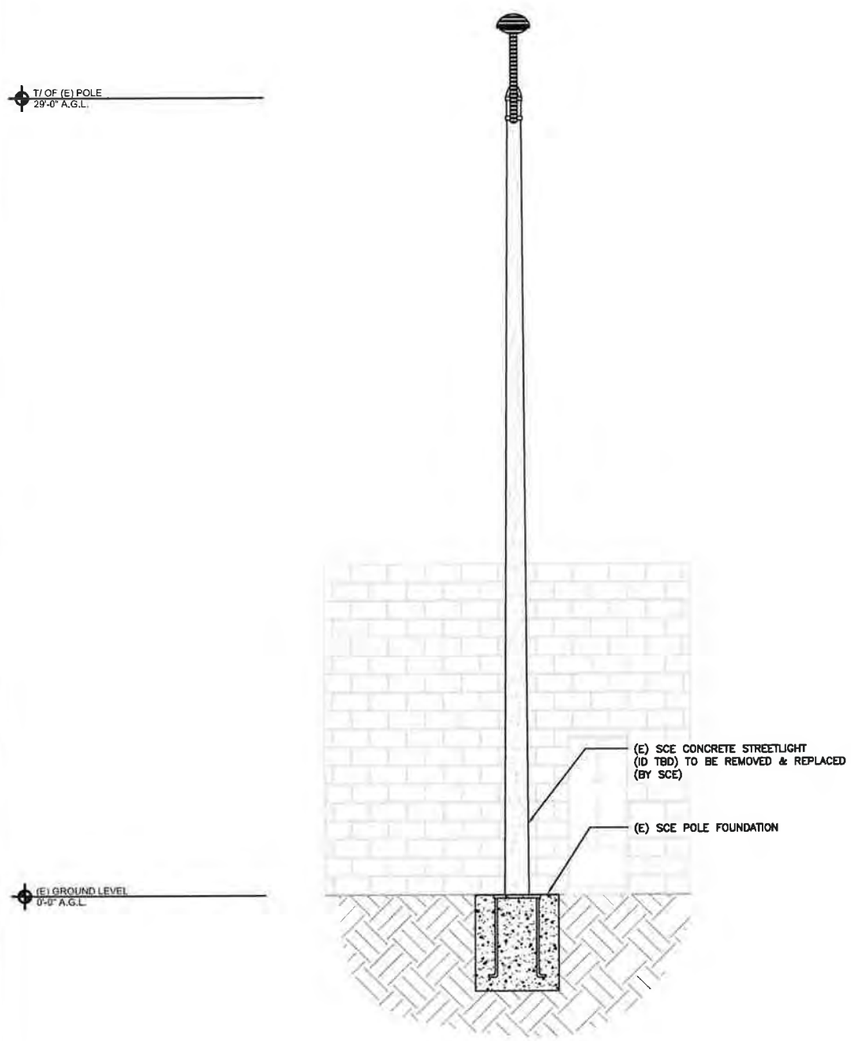

EXISTING WEST ELEVATION

24"x36" SCALE: 3/8" = 1'-0"
11"x17" SCALE: 3/16" = 1'-0"

0" 1' 2' 4'

2

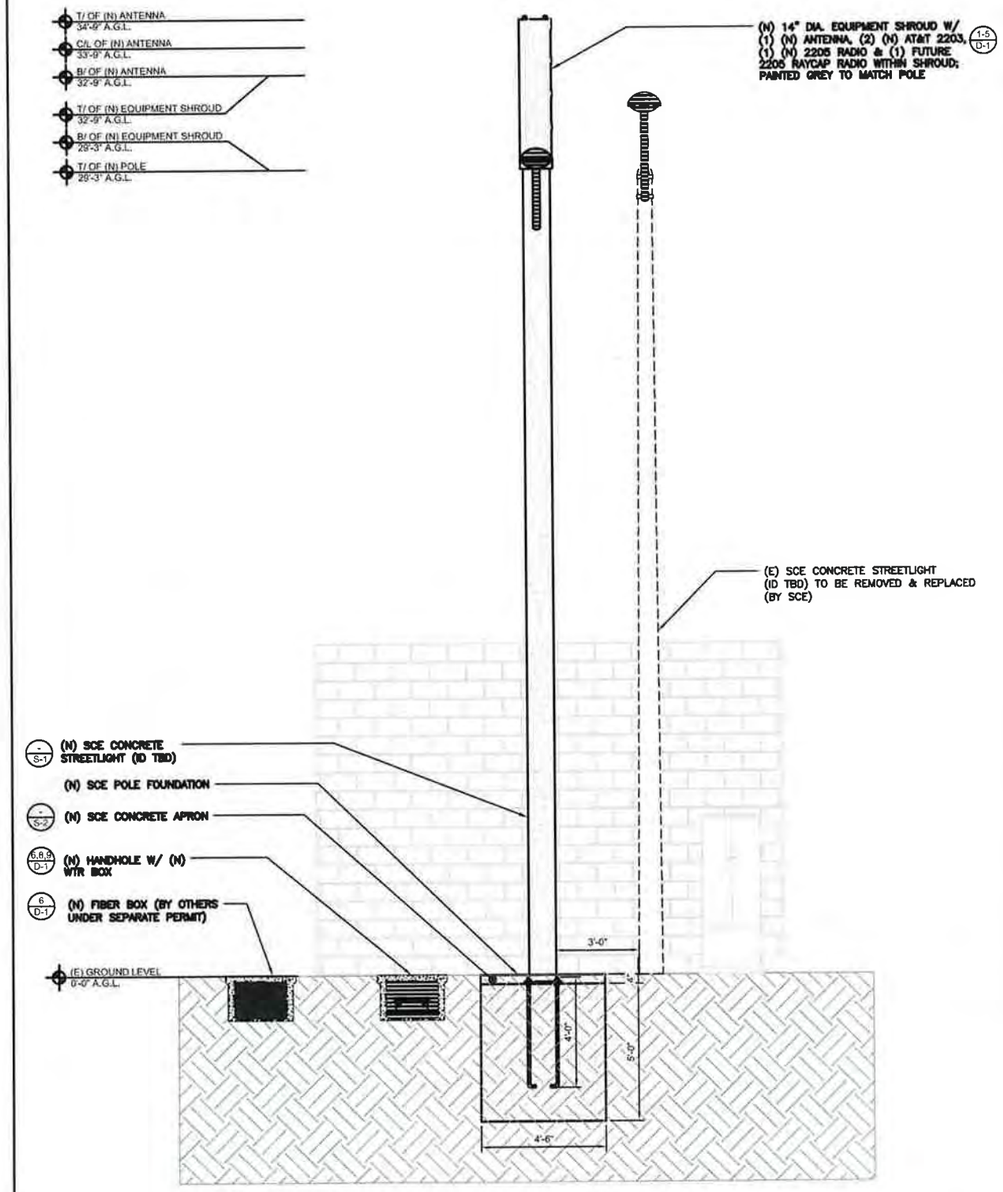

NEW WEST ELEVATION

24"x36" SCALE: 3/8" = 1'-0"
11"x17" SCALE: 3/16" = 1'-0"

0" 1' 2' 4'

1

at&t

ERICSSON

330 COMMERCE, STE. 200
IRVINE, CA 92602

M SQUARED WIRELESS

1357 CALLE AVANZADO
SAN CLEMENTE CA 92673 (949) 361-5024

DRAWN BY:	AMF
CHECKED BY:	MM

REV	DATE	DESCRIPTION
G	05/29/18	100% CONSTRUCTION
F	03/07/18	JX COMMENTS
E	02/16/18	100% CONSTRUCTION
D	02/05/18	100% CONSTRUCTION
C	12/15/17	100% CONSTRUCTION
B	12/01/17	CLIENT REVIEW
A	11/13/17	90% CONSTRUCTION

REGISTERED PROFESSIONAL ENGINEER
GRAHAM A. WHARTON
C50547
STATE OF CALIFORNIA

IT IS A VIOLATION OF LAW FOR ANY PERSON, UNLESS THEY ARE ACTING UNDER THE DIRECTION OF A LICENSED PROFESSIONAL ENGINEER, TO ALTER THIS DOCUMENT.

SITE ID: HBNPB 024
2850 FAIRVIEW RD
COSTA MESA, CA, 92626

SHEET TITLE

ELEVATIONS

SHEET NUMBER

A-3

PROPOSED SITE LOCATION LOOKING NORTH

1

at&t

ERICSSON

330 COMMERCE, STE. 200
IRVINE, CA 92602

M SQUARED WIRELESS

1387 CALLE AVANZADO
SAN CLEMENTE CA 92673 (949) 391-5934

DRAWN BY:	AMF
CHECKED BY:	MM

REV	DATE	DESCRIPTION
G	05/29/18	100% CONSTRUCTION
F	03/07/18	JX COMMENTS
E	02/16/18	100% CONSTRUCTION
D	02/05/18	100% CONSTRUCTION
C	12/15/17	100% CONSTRUCTION
B	12/01/17	CLIENT REVIEW
A	11/13/17	90% CONSTRUCTION

REGISTERED PROFESSIONAL ENGINEER
C50547
STATE OF CALIFORNIA

IT IS A VIOLATION OF LAW FOR ANY PERSON, UNLESS THEY ARE ACTING UNDER THE DIRECTION OF A LICENSED PROFESSIONAL ENGINEER, TO ALTER THIS DOCUMENT.

SITE ID: HBNPB 024
2850 FAIRVIEW RD
COSTA MESA, CA, 92626

SHEET TITLE

SITE IMAGE

SHEET NUMBER

A-4

AVAILABLE FROM EXCEL SIGN AND DECAL:
http://www.weneedsigns.com/home.php?cal+1135 AND CLICK ON AT&T
PH: 510-651-0445
N01-DC-16 1"X6" NOTICE DECAL
"For 1 Foot Distance" VINYL DECAL WITH ADHEDSIVE BACKING

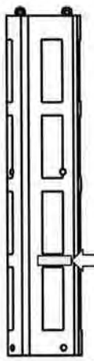

NOTICE

RF energy emitted by this device may exceed the FCC's general public exposure limits. Stay at least 1 foot away from the device.
Call 800-638-2822 for help if you need access within 1 foot

Place 3 NOTICE sticker at the bottom of the front of the radome of each antenna.

ANTENNA DISCLAIMER LABEL

24"x36" SCALE: NTS
11"x17" SCALE: NTS

7

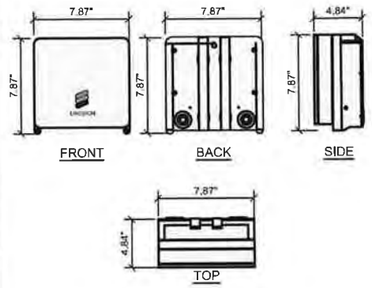

ERICSSON - MICRO RADIO 2205	
MECHANICAL SPECIFICATIONS:	
DIMENSIONS (WxDxH):	7.87"x4.84"x7.87", INCLUDING MOUNTING BRACKET AND ESTHETIC FRONT COVER
VOLUME AND WEIGHT:	4 LITRES AND < 4 kg (8.82 lbs)
MOUNTING:	WALL AND POLE MOUNT
INTERFACE SPECIFICATIONS:	
ANTENNA PORTS:	2 x 4 3-10(F)
CPRI:	2 x 2 5/5/10 Gbps (EXCHANGEABLE SFP MODULES)
OPTICAL INDICATORS:	6
EXTERNAL ALARM:	2
FIELD GROUND:	1
ELECTRICAL SPECIFICATIONS:	
POWER SUPPLY:	-48 VCD OR 100-250 VAC
POWER OUTPUT:	97 WATTS MAX
MAX HEAT DISSIPATION:	90 WATTS
MINIMUM AC FUSE RATING:	6 AMP

MICRO RADIO 2205

24"x36" SCALE: NTS
11"x17" SCALE: NTS

4

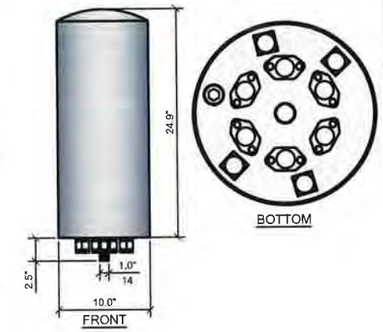

GALTRONICS GG2410-00621 PSEUDO OMNI CANISTER ANTENNA	
MECHANICAL SPECIFICATIONS:	
DIMENSIONS (HxD):	24.8 x 10 INCHES (643 x 255 mm)
WEIGHT EXCL MOUNTING BRACKETS:	17.2lbs (9 kg)
NO. OF CONNECTORS	10 X 4.3-10 DIN FEMALE
CONNECTOR TYPE & FREQUENCY BAND [MHz]:	4 X 4 3-10 DIN FEMALE (1695-2360) MHz
	4 X 4 3-10 DIN FEMALE (3550-3700) MHz
	2 X 4 3-10 DIN FEMALE (5150-5950) MHz
MAX WIND SPEED:	150 mph
RADOME MATERIAL:	ASA
SHIPPING DIMS (LxWxD):	30"X19"X19" (762x483x483)mm
GROSS SHIPPING WEIGHT:	26 lbs (12kg)

PART NO. GG2410-00621-11 (GRAY)
PART NO. GG2410-00621-611 (BROWN)
PART NO. GG2410-00621-811 (CHROME)

GALTRONICS P6480-6 OMNI ANTENNA

24"x36" SCALE: NTS
11"x17" SCALE: NTS

1

ELECTROMATE	
HINGED 3R ENCLOSURE	
DIMENSIONS:	
A	12"
B	12"
C	6"

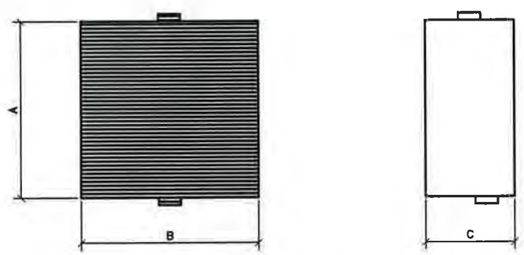

UN-METERED FUSED PANEL

24"x36" SCALE: NTS
11"x17" SCALE: NTS

8

RAYCAP - RPSCAP-6033-P-120-D	
ELECTRICAL	MECHANICAL
SURGE PROTECTION DEVICE (SPD) TYPE TO UL: STRIKESORB 30-A NUMBER OF CIRCUITS PROTECTED: 4 SURGE PROTECTIVE DEVICE (SPD) TYPE: PER UL 1449 4TH EDITION: TYPE 2 COMPONENT ASSEMBLY SURGE PROTECTION DEVICE (SPD) CLASS TO IEC 61643-11: CLASS II NOMINAL OPERATING VOLTAGE (UN): 120 V NOMINAL DISCHARGE CURRENT (IN) PER UL 1449-4TH EDITION: 20 KA 8/20 MS MAXIMUM DISCHARGE CURRENT (IMAX) PER IEC 61643-11 60 KA 8/20 MS MAXIMUM CONTINUOUS OPERATING VOLTAGE (UC) (MCOV) 150V VOLTAGE PROTECTION LEVEL (UP) PER IEC 61643-11: 700V VOLTAGE PROTECTION RATING (VPR): 20 KA 8/20 SUPPRESSION TECHNOLOGY: MOV PROTECTION MODES (DUAL MODE): LINE TO NEUTRAL, NEUTRAL TO GROUND ERICSSON MODULES ARE COMPLIANT TO THE FOLLOWING SURGE PROTECTIVE DEVICE (SPD) STANDARDS UL 1449-4TH EDITION, 2011, IEC 61643-11 2011, EN 61643-11 2012, IEEE C62.11-2005, IEEE C62.41-2002, IEEE C62.45-2002, IEEE C62.41-2002 MANUALS - CERTIFICATION UL, VDE, CE	CONNECTION TERMINAL: COMPRESSION LUG #6 - #14 AWG (13 - 2MM2) TERMINAL BLOCK #10-#26 AWG (6 - 0 14MM2) ENVIRONMENTAL INGRESS PROTECTION (IP) RATING: NEMA 4X OPERATION TEMPERATURE: (°C) -40° C TO +80° C STORAGE TEMPERATURE: (°C) -70° C TO +80° C ENCLOSURE TYPE (OUTDOOR) POLYCARBONATE: UL 94V-0 RATED ENCLOSURE DIMENSION: (L × W × H) 8 56" X 5 06 ' X 10 08" [217 × 128 × 256 MM] WEIGHT: 2 25 LBS [1 02KG]

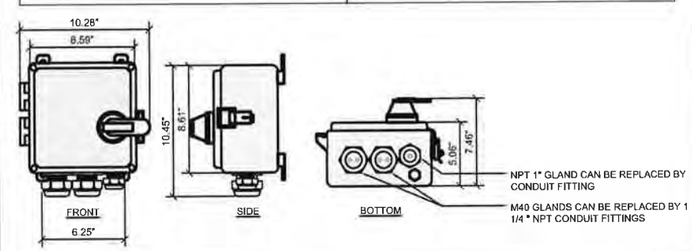

RAYCAP DISCONNECT

24"x36" SCALE: NTS
11"x17" SCALE: NTS

5

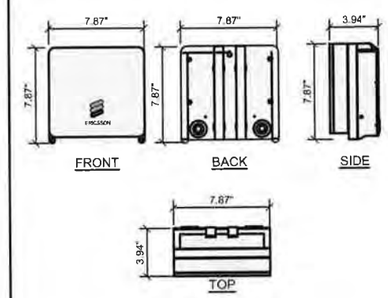

ERICSSON - MICRO RADIO 2203	
MECHANICAL SPECIFICATIONS:	
DIMENSIONS (WxDxH):	7.87"x3.94"x7.87", INCLUDING MOUNTING BRACKET AND ESTHETIC FRONT COVER
VOLUME AND WEIGHT:	4 LITRES AND < 4.5 kg (9.92 lbs)
MOUNTING:	WALL AND POLE MOUNT
INTERFACE SPECIFICATIONS:	
ANTENNA PORTS:	2 x 4 3-10(F)
CPRI:	2 x 2 5/5/10 Gbps (EXCHANGEABLE SFP MODULES)
OPTICAL INDICATORS:	6
EXTERNAL ALARM:	2
FIELD GROUND:	1
ELECTRICAL SPECIFICATIONS:	
POWER SUPPLY:	-48 VCD OR 100-250 VAC
POWER OUTPUT:	97 WATTS MAX
MAX HEAT DISSIPATION:	90 WATTS
MINIMUM AC FUSE RATING:	6 AMP

MICRO RADIO 2203

24"x36" SCALE: NTS
11"x17" SCALE: NTS

2

SQUARE-D	
HINGED 3R ENCLOSURE # D221NRB	
DIMENSIONS:	
A	7.75"
B	9.63"
C	3.75"

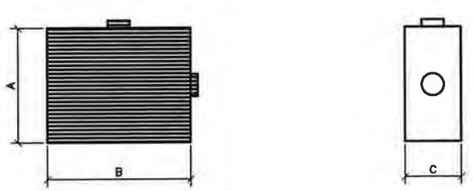

AT&T MOBILITY FUSED DISCONNECT

24"x36" SCALE: NTS
11"x17" SCALE: NTS

9

COVER FEATURES:
- STANDARD LOAD RATING: 20,800 LBS, WHEEL LOAD ON 10"x20" PLATE
- 2 BOLT DOWN LOCATIONS
- STAINLESS STEEL BOX INSERTS
- POLYMER CONCRETE CONSTRUCTION
- NON-SKID SURFACE STANDARD
- 20K TO BE EMBOSSED ON COVER
- APPROXIMATE WEIGHT = 120 LBS.

COVER FEATURES:
- POLYMER CONCRETE CONSTRUCTION
- LIGHTWEIGHT
- STACKABLE FOOT
- APPROX. WEIGHT 188 LBS.

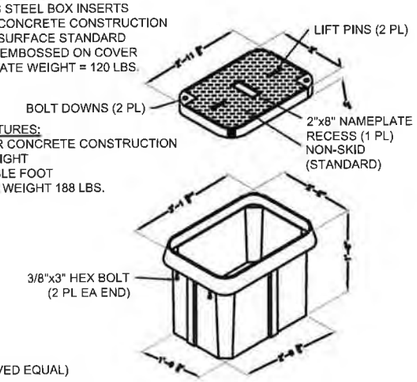

(OR APPROVED EQUAL)

HANDHOLE

24"x36" SCALE: NTS
11"x17" SCALE: NTS

6

CONCEALFAB CONCEALMENT POLE TOP ECCENTRIC	
MECHANICAL SPECIFICATIONS:	
DIMENSIONS (WxDxH):	65"x014"
MOUNTING:	MOUNTS TO TOP OF POLE

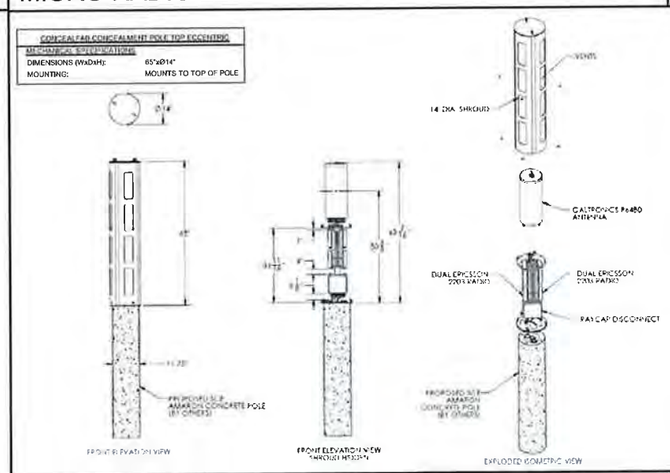

EQUIPMENT SHROUD

24"x36" SCALE: NTS
11"x17" SCALE: NTS

3

at&t

ERICSSON
330 COMMERCE, STE. 200
IRVINE, CA 92602

M SQUARED WIRELESS
1387 CALLE AVANZADO
SAN CLEMENTE CA 92673 (949) 391-6024

DRAWN BY:	AMF
CHECKED BY:	MM

REV	DATE	DESCRIPTION
G	05/29/18	100% CONSTRUCTION
F	03/07/18	JX COMMENTS
E	02/16/18	100% CONSTRUCTION
D	02/05/18	100% CONSTRUCTION
C	12/15/17	100% CONSTRUCTION
B	12/01/17	CLIENT REVIEW
A	11/13/17	90% CONSTRUCTION

REGISTERED PROFESSIONAL ENGINEER
C50547
STATE OF CALIFORNIA

IT IS A VIOLATION OF LAW FOR ANY PERSON, UNLESS THEY ARE ACTING UNDER THE DIRECTION OF A LICENSED PROFESSIONAL ENGINEER, TO ALTER THIS DOCUMENT.

SITE ID: HBNPB 024
2850 FAIRVIEW RD
COSTA MESA, CA, 92626

SHEET TITLE
DETAILS

SHEET NUMBER
D-1

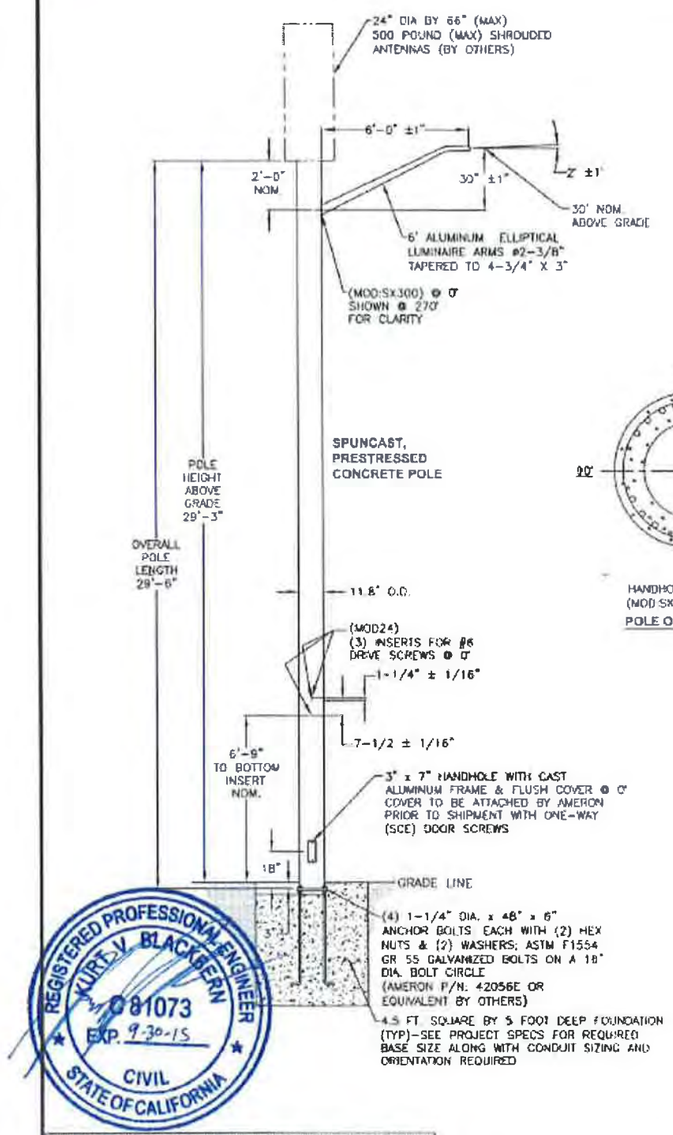

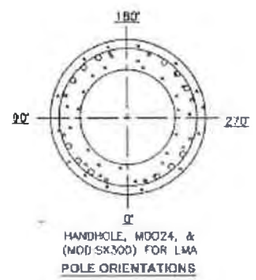

POLE ORIENTATIONS

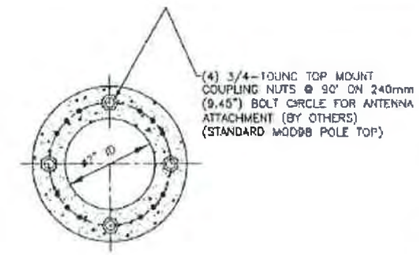

POLE TOP DETAILS

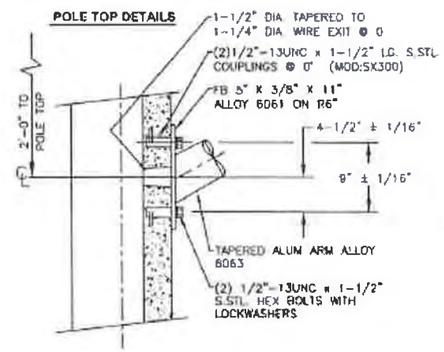

BRACKET ARM TO POLE CONNECTION

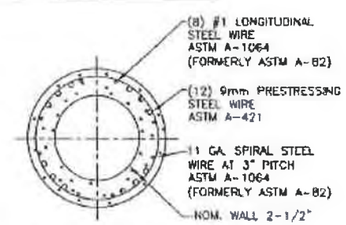

SECTION DETAILS

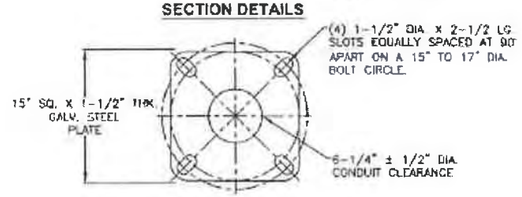

BASE PLATE DETAILS

REV.	DATE	DESCRIPTION	DRN.	APPR.
A	09/07	REDRAWN, ADDED POLE P/N	A.C.	
B	05/08	UPDATED FOR ORACLE	T.L.	
C	02/10	A/B WERE A36M55, NOW A307	J.C.	
D	06/15	UPDATED TO NEW DWG. STDS.	L.P.	

"F" LEVEL CONFIG CODES		
OPTION CLASS	ENTRY	INFO.
COATING	S	
HH COVER	66546E	
DOOR SCRS	SCE	
DRILL IN MOD	MOD24	

"P" LEVEL CONFIG CODES		
OPTION CLASS	ENTRY	INFO.
MIX	B1	
FINISH	S	
BASEPLATE	63250E	
COLLAR	NONE	
POLE TOP CON.	MOD98	
CAST-IN MOD	MODSX300	

300MM NON-TAPERED BASE PLATE ROUND POLE

POLE DESIG-NATION	POLE HEIGHT ABOVE GRADE	OVERALL POLE LENGTH	BOLT CIRCLE	BASE O.D.	ULTIMATE G.L. MOMENT (ft.-lbs.)	POLE WEIGHT (lbs.)
BP300X09	29'-3"	29'-6"	16"	11-13/16"	65,000	2900

( ) POLES REQUIRED (P/N: BP300X09-16137), EACH WITH 6' WALL BRACKET ELLIPTICAL ARM (P/N: LAEB6A)

NOTES:

1. MIX (B15S): SCE BLACK & WHITE, LIGHTLY EXPOSED AGGREGATE FINISH WITH FLAT WATER SEALER COATING.
2. ASTM C-150 TYPE III GRAY CEMENT.
3. f'c @ 28 DAYS=7,000 PSI, USING SPUN CYLINDER TEST.
4. f'c @ 28 DAYS=5,000 PSI, USING ASTM C-31 CYLINDER TEST.
5. POLES MANUFACTURED TO ASTM C-1089-13 SPECIFICATIONS.
6. PROTECTIVE COAT EXPOSED P.C. WIRES AT POLE ENDS.
7. THE POLE DEPICTED ON THIS DRAWING IS DESIGNED TO WITHSTAND THE LOADS IMPARTED BY A SINGLE SIDE MOUNTED TAPERED ELLIPTICAL ALUMINUM ARM (NOT TO EXCEED 6' OFFSET, 3.7 SQ. FT. EPA, 25 LBS.) WITH THE ARM HOLDING A DOWNWARD FACING AREA OR PENDENT LUMINAIRE (NOT TO EXCEED 2.0 SQ. FT EPA, 50 POUNDS); THE POLE ALSO SUPPORTS (1) ANTENNA SHROUD CENTERED 3' ABOVE THE POLE TOP (NOT TO EXCEED 6.3 SQ. FT. EPA, 225 LBS. MAX) AS DESIGNED PER THE 2013 AASHTO LTS-6 (CRITERIA FOR STREET LIGHTING POLES), 2010 CALIFORNIA BUILDING CODE & ASCE7-05 FOR 90 MPH WIND AND SEISMIC ZONE (3-SECOND GUSTS) & SEISMIC CRITERIA Ss=1.75 & S1=0.6. PLEASE CONTACT & ADVISE AMERON ENGINEERING IF THE INTENDED VALUES EXCEED THESE VALUES.
8. DUE TO THE NATURE & CHARACTERISTICS OF CONCRETE, SIDE MOUNT SPACING DIMENSIONS CAN ONLY BE TAKEN TO THE NEAREST 1/8 INCH.

APPROVED BY DATE

SOUTHERN CALIFORNIA EDISON
BP300X09 POLE WITH SINGLE 6' ARM

THIS DOCUMENT CONTAINS INFORMATION WHICH IS PROPRIETARY TO AMERON. IT SHALL NOT BE REPRODUCED, USED OR DISCLOSED TO ANYONE WITHOUT THE PRIOR WRITTEN PERMISSION OF AMERON.

AMERON POLE PRODUCTS

DRAWN: SJB	DATE: 10/2003	
SCALE: N.T.S.	DWG. NO. 040-01277	REV D

REGISTERED PROFESSIONAL ENGINEER KURT V. BLACKBERN C 81073 EXP. 9-30-15 CIVIL STATE OF CALIFORNIA

COMPLIANCE TO ATH CODE NOT EXPLICITLY LISTED ON THIS DRAWING IS NOT GUARANTEED. PLEASE CONTACT AMERON ENGINEERING IF YOU HAVE SPECIFIC CODE REQUIREMENTS.

at&t

ERICSSON
330 COMMERCE, STE. 200
IRVINE, CA 92602

M SQUARED WIRELESS
1307 CALLE AVANZADO
SAN CLEMENTE CA 92673 (949) 361-6024

DRAWN BY:	AMF
CHECKED BY:	MM

REV	DATE	DESCRIPTION
G	05/29/18	100% CONSTRUCTION
F	03/07/18	JX COMMENTS
E	02/16/18	100% CONSTRUCTION
D	02/05/18	100% CONSTRUCTION
C	12/15/17	100% CONSTRUCTION
B	12/01/17	CLIENT REVIEW
A	11/13/17	90% CONSTRUCTION

REGISTERED PROFESSIONAL ENGINEER SHALL A. WHARTON C50547 CIVIL STATE OF CALIFORNIA

IT IS A VIOLATION OF LAW FOR ANY PERSON, UNLESS THEY ARE ACTING UNDER THE DIRECTION OF A LICENSED PROFESSIONAL ENGINEER, TO ALTER THIS DOCUMENT.

SITE ID: HBNPB 024
2850 FAIRVIEW RD
COSTA MESA, CA, 92626

SHEET TITLE
POLE DETAILS

SHEET NUMBER
S-1

MC 890 Foundation Detail for Fiberglass Nostalgic, Fiberglass, Steel, or Concrete Electroliers

Scope MC 890.1 Electrolier Foundation Detail

Figure MC 890–1: Electrolier Foundation Detail

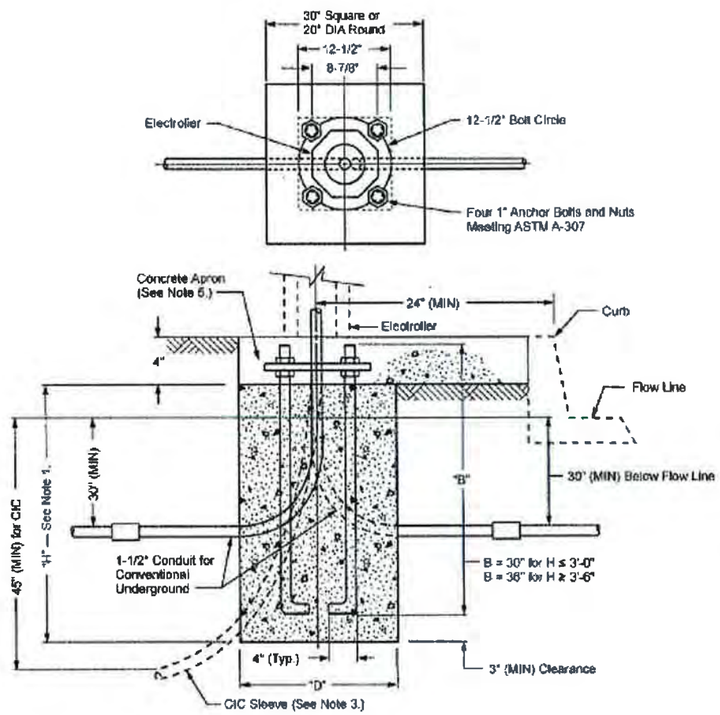

Note(s):

1. The footing depth will vary depending on the type of soil and wind loading requirements. Consult local government agency for requirements. See Table MC 890–1 (Sheet 3) through Table MC 890–4 (Sheet 4).
2. Foundation shall be installed after conduit or CIC (for Underground Service), curbs, and sidewalks are in place and grades are established.
3. 1-1/2" Plastic CIC Sleeve for UG Concrete Electrolier (tape both ends to prevent debris from entering the sleeve).
4. Concrete to reach a minimum compression strength of 2800 psi in 28 days. See UGS 20.3.
5. Place a minimum size concrete apron of 30" x 30" x 4" thick around the pole at the ground level to provide a constrained surface condition when required. Grout to be placed after pole is set and plumbed.

Scope MC 890.3 Electrolier Foundation Requirements

Table MC 890–1: 70 MPH Wind Zone, Constrained Surface Condition

Electrolier Foundation Requirements								
	Soil Type	Fiberglass, Concrete, or Steel				Nostalgic		
		23' Shaft		28' Shaft		All Poles	Fiberglass	Marbelite
	Per UBC[a]	H	D	H	D	H	D	D
I.	Massive Crystalline Bedrock	2'-6"	20" dia.	2'-6"	20" dia.	2'-6"	20" dia.	24" dia
		2'-6"	30" x 30"	2'-6"	30" x 30"	2'-6"	30" x 30"	30" x 30"
II.	Sedimentary and Foliated Rock	2'-6"	20" dia.	2'-6"	20" dia.	2'-6"	20" dia.	24" dia.
		2'-6"	30" x 30"	2'-6"	30" x 30"	2'-6"	30" x 30"	30" x 30"
III.	Sandy Gravel, Gravel	3'-0"	20" dia.	3'-0"	20" dia.	3'-0"	20" dia.	24" dia
		2'-6"	30" x 30"	2'-6"	30" x 30"	2'-6"	30" x 30"	30" x 30"
IV.	Sand, Silty Sand, Clayey Sand, Silty Gravel, Clayey Gravel	3'-6"	20" dia.	3'-6"	20" dia.	3'-6"	20" dia.	24" dia.
		2'-6"	30" x 30"	2'-6"	30" x 30"	2'-6"	30" x 30"	30" x 30"
V.	Clay, Sands, Sandy Clay, Silty Clay, Clayey Silt	4'-0"	20" dia.	4'-6"	20" dia.	4'-0"	20" dia.	24" dia.
		2'-6"	30" x 30"	3'-6"	30" x 30"	2'-6"	30" x 30"	30" x 30"

[a] Uniform Building Code — 1991

Note(s):

1. H = Depth of footing
2. D = Diameter of round footing or the side dimension of square footing.

Table MC 890–2: 70 MPH Wind Zone, Non-Constrained Surface Condition

Electrolier Foundation Requirements								
	Soil Type	Fiberglass, Concrete, or Steel				Nostalgic		
		23' Shaft		28' Shaft		All Poles	Fiberglass	Marbelite
	Per UBC[a]	H	D	H	D	H	D	D
I.	Massive Crystalline Bedrock	2'-6"	20" dia.	2'-6"	20" dia.	2'-6"	20" dia	24" dia.
		2'-6"	30" x 30"	2'-6"	30" x 30"	2'-6"	30" x 30"	30" x 30"
II.	Sedimentary and Foliated Rock	3'-0"	20" dia.	3'-6"	20" dia.	3'-0"	20" dia.	24" dia.
		2'-6"	30" x 30"	2'-6"	30" x 30"	2'-6"	30" x 30"	30" x 30"
III.	Sandy Gravel, Gravel	3'-6"	20" dia.	4'-0"	20" dia.	3'-6"	20" dia.	24" dia
		3'-0"	30" x 30"	3'-0"	30" x 30"	3'-0"	30" x 30"	30" x 30"
IV.	Sand, Silty Sand, Clayey Sand, Silty Gravel, Clayey Gravel	4'-0"	20" dia.	4'-6"	20" dia.	4'-0"	20" dia.	24" dia.
		3'-0"	30" x 30"	3'-6"	30" x 30"	3'-0"	30" x 30"	30" x 30"
V.	Clay, Sands, Sandy Clay, Silty Clay, Clayey Silt	4'-6"	20" dia.	5'-0"	20" dia.	4'-6"	20" dia.	24" dia.
		3'-6"	30" x 30"	4'-0"	30" x 30"	3'-6"	30" x 30"	30" x 30"

[a] Uniform Building Code — 1991

Note(s):

1. H = Depth of footing
2. D = Diameter of round footing or the side dimension of square footing

at&t
ERICSSON
330 COMMERCE, STE. 200
IRVINE, CA 92602
M SQUARED WIRELESS
1397 CALLE AVANZADO
SAN CLEMENTE CA 92673 (949) 201-0024

DRAWN BY:	AMF
CHECKED BY:	MM

REV	DATE	DESCRIPTION
G	05/29/18	100% CONSTRUCTION
F	03/07/18	JX COMMENTS
E	02/16/18	100% CONSTRUCTION
D	02/05/18	100% CONSTRUCTION
C	12/15/17	100% CONSTRUCTION
B	12/01/17	CLIENT REVIEW
A	11/13/17	90% CONSTRUCTION

IT IS A VIOLATION OF LAW FOR ANY PERSON, UNLESS THEY ARE ACTING UNDER THE DIRECTION OF A LICENSED PROFESSIONAL ENGINEER, TO ALTER THIS DOCUMENT.

SITE ID: HBNPB 024
2850 FAIRVIEW RD
COSTA MESA, CA, 92626

SHEET TITLE
POLE FOUNDATION DETAILS

SHEET NUMBER
S-2

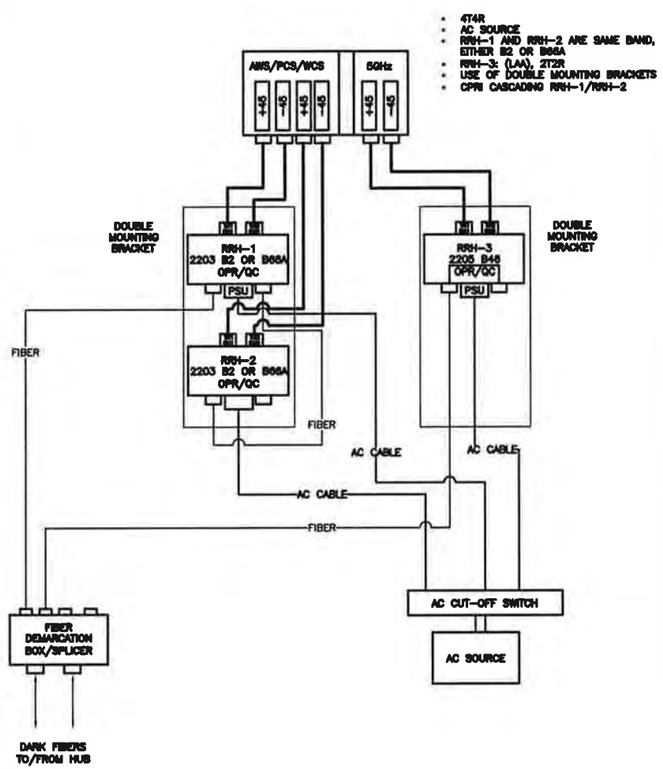

PICO PLUMBING DIAGRAM — 24"x36" SCALE: NTS / 11"x17" SCALE: NTS — 6

NOTE:
ALL GROUND CONDUCTORS TO BE #6 THHN/THWN GREEN STRANDED COPPER UNLESS OTHERWISE NOTED OR REQUIRED BY EQUIPMENT MANUFACTURER.

EXOTHERMIC WELD CONNECTIONS
MECHANICAL TYPE CONNECTIONS
GROUNDING BAR

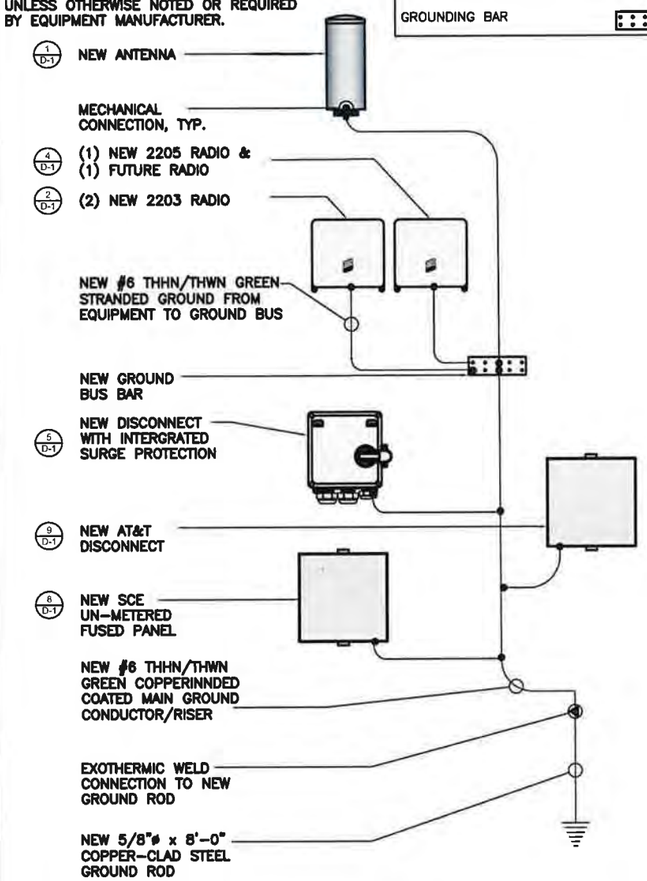

GROUNDING SCHEMATIC — 24"x36" SCALE: NTS / 11"x17" SCALE: NTS — 3

NOTE:
UTILITY DESIGN AND RUNS ARE PRELIMINARY. PENDING FINAL DESIGN FROM UTILITY PROVIDERS

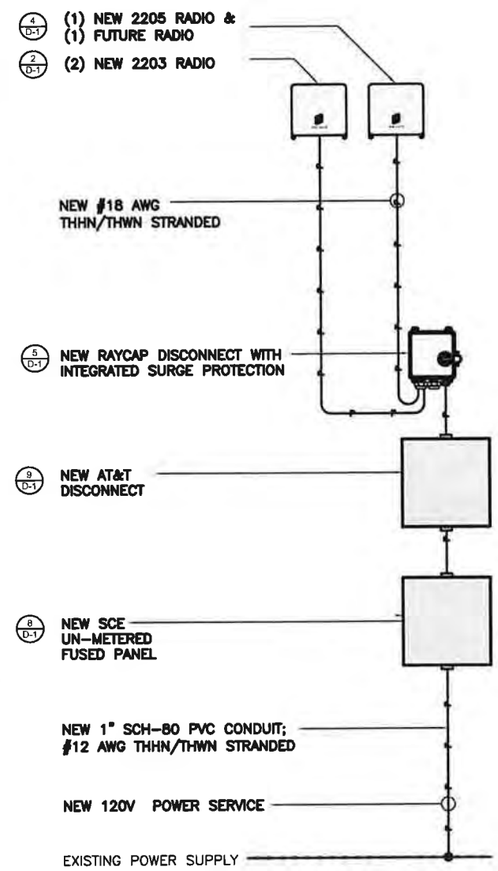

SINGLE LINE DIAGRAM — 24"x36" SCALE: NTS / 11"x17" SCALE: NTS — 1

NOT USED — 24"x36" SCALE: NTS / 11"x17" SCALE: NTS — 7

NOT USED — 24"x36" SCALE: NTS / 11"x17" SCALE: NTS — 4

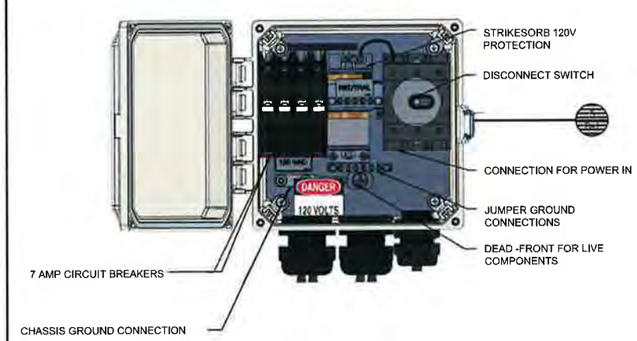

BREAKER SCHEDULE — 24"x36" SCALE: NTS / 11"x17" SCALE: NTS — 2

at&t

ERICSSON
330 COMMERCE, STE. 200
IRVINE, CA 92602

M SQUARED WIRELESS
1387 CALLE AVANZADO
SAN CLEMENTE CA 92673 (949) 291-9624

DRAWN BY:	AMF
CHECKED BY:	MM

REV	DATE	DESCRIPTION
G	05/29/18	100% CONSTRUCTION
F	03/07/18	JX COMMENTS
E	02/16/18	100% CONSTRUCTION
D	02/05/18	100% CONSTRUCTION
C	12/15/17	100% CONSTRUCTION
B	12/01/17	CLIENT REVIEW
A	11/13/17	90% CONSTRUCTION

REGISTERED PROFESSIONAL ENGINEER
GRAYSON A. WHARTON
C50547
CIVIL
STATE OF CALIFORNIA

IT IS A VIOLATION OF LAW FOR ANY PERSON, UNLESS THEY ARE ACTING UNDER THE DIRECTION OF A LICENSED PROFESSIONAL ENGINEER, TO ALTER THIS DOCUMENT.

SITE ID: HBNPB 024
2850 FAIRVIEW RD
COSTA MESA, CA, 92626

SHEET TITLE
ELECTRICAL DETAILS

SHEET NUMBER
E-1

CITY OF COSTA MESA

P.O. BOX 1200 • 77 FAIR DRIVE • CALIFORNIA 92628-1200

DEVELOPMENT SERVICES DEPARTMENT

December 6, 2018

Thomas St. Clair
3005 S. El Camino Real
San Clemente, CA 92672

RE: ZONING APPLICATION 18-50
MINOR CONDITIONAL USE PERMIT FOR A DEVIATION FROM SHARED PARKING REQUIREMENTS TO ALLOW STORAGE WITHIN EXISTING TWO-CAR GARAGES
1908 AND 1912 POMONA AVENUE

Dear Mr. St. Clair:

City staff's review of your zoning application for the above-referenced project has been completed. The application, as described in the attached project description, has been approved, based on the findings and subject to the conditions of approval and code requirements (attached). The decision will become final at 5:00 p.m. on December 13, 2018, unless appealed by an affected party, including filing of the necessary application and payment of the appropriate fee, or called up for review by a member of the Planning Commission or City Council.

If you have any questions regarding this letter, please feel free to contact the project planner, Nancy Huynh, at 714.754.5609, or at nancy.huynh@costamesaca.gov .

Sincerely,

WILLA BOUWENS-KILLEEN, AICP
Zoning Administrator

Attachments: Project Description
Findings
Conditions of Approval, Code Requirements, and Special District
Approved Conceptual Plans and Applicant Letter

cc: Engineering
Fire Protection Analyst
Building Safety Division

PROJECT DESCRIPTION

Location

The property is located at 1908 and 1912 Pomona Avenue in a Local Business District zone (C1). The property has a General Plan Land Use designation of General Commercial. Uses surrounding the subject property are also zoned Local Business District. The property abuts an existing high-density multi-family development, The Towers on 19th Apartments, which is zoned R3 – Multiple-Family Residential. The property contains two existing, two-story commercial buildings with four, two-car parking garages located on the ground floor of each building.

Background

The property was previously approved by Planning Commission on February 9, 1987 as contractor's offices with a conditional use permit (CUP) to allow required parking to be placed in garages (PA-87-09). Since the property was unable to meet the parking requirements per Zoning Code at the time it was reviewed, the garages were allowed to be counted towards the total parking provided to satisfy the requirements. Parking requirements were not calculated for the garages since they were approved as parking spaces only. The project site was approved with 22 parking spaces in the surface parking lot and 16 spaces in the garages. As part of the conditions of approval for PA-87-09, a land use restriction was required to be recorded to prevent any possible conversion of the garages to a non-parking use, such as storage and, thereby, impacting parking.

Proposed Project

The applicant requests approval of a minor conditional use permit (MCUP) to deviate from the shared parking requirements to allow storage within the existing two-car garages.

The proposed request will amend PA-87-09 including Condition No. 1 to remove the current land use restriction and allow storage within the garages. See discussion below.

ANALYSIS

The property currently contains two existing, two-story commercial buildings that are each 4,912 square foot. Each building has four, two-car garages located on the ground floor with access to the four individual tenant units located on the second floor. The individual tenant units are 680 square feet each. The property has two existing driveways along Pomona Avenue that are each approximately 23-feet wide. There are currently 16 parking spaces in the common parking lot and 16 spaces provided in the two-car garages for a total of 32 parking spaces. Each of the existing garages are 548 square feet in size with an approximately 16-foot wide garage roll-up door.

Over the years, the use of the property has changed from contractors' offices to a variety of general office and commercial uses. Current and prospective tenants include a nutritional product company, on-line sales business for event decors, home staging business, and cabinet design office. The applicant has indicated that the current and prospective tenants are small, incubator businesses with limited employees and little or no customer traffic that would not generate a high demand for parking. These tenants each have a 680 square foot office. By allowing storage in a portion of the garages on the ground floor, the tenants gain more working space in their second-floor offices.

The garages were constructed to be oversized (548 square feet versus the typical 400 square feet for a two-car garage) since they were intended for contractors' to park their work trucks – which are larger than the average passenger vehicle. The Zoning Code contains parking requirements based on different types of uses; in commercially-zoned properties, storage is parked at four spaces per 1,000 gross square feet. However, in this instance, the provision of storage would not generate additional parking demand because the current and prospective incubator business tenants have little or no employees or customers. Consequently, the potential relocation of storage to the garage area will not result in a higher parking demand by making more space available for additional employees and/or customers. The larger size of the garages increases the chance that parking will still occur in the garages in conjunction with storage,

The applicant has stated that each tenant unit space is limited to two parking spaces only, which includes the option of continuing to park in their garages. To ensure parking impacts are not generated, conditions of approval are included that limit the businesses to small, incubator businesses with few or no employees and/or customers; that the garages can only be used for parking and/or storage – no improvements may be made inside the garages that would prohibit use of the spaces for parking; that each unit tenant space is limited to two parking spaces; and that the tenants and any employees/customers may not park on the public street or in the surrounding neighborhood. If it becomes apparent that the approval is generating parking impacts, the garage spaces could revert to required parking.

General Plan Consistency

With the recommended conditions of approval and code requirements, the use will be consistent and compatible with surrounding uses, as specified in Policy LU-6.7 and LU-6.15 of the General Plan Land Use Element:

- *LU-6.7 – Encourage new and retain existing businesses that provide local shopping and services.*

- *LU-6.15 – Promote unique and specialized commercial and industrial districts within the City which allow for incubation of new or growing businesses and industries.*

Current and prospective tenants are small local businesses that include a nutritional product company (Shining Sea Imports), on-line sales business for event decors (Midnight Confetti), home staging business, and a cabinet design office (Haynes Cabinet Design). The smaller tenant unit size allow the small, incubator businesses to start up at a lower cost than a typical office or retail unit space. By allowing storage in a portion of the garages on the ground floor, it allows the tenants to have more working space in the office. It also allows the businesses to grow should their business do well and need more office space for an employee. Furthermore, the additional storage can help to attract other new incubator businesses since it would be an added amenity that tenants could use for their business needs.

The use of the storage as proposed and conditioned would not generate additional parking demand as the storage in each garage will be used in support of the individual small, incubator tenants who have few or no employees and/or customers. All other development standards including interior parking landscaping will comply as required by Code. Therefore, parking will not be impacted and no other changes or uses are proposed for the development.

FINDINGS

A. The information presented complies with Costa Mesa Municipal Code Section 13-29(g)(2) in that:

1. The proposed use is compatible with developments in the same general area. The property has a General Plan Land Use designation of General Commercial which is intended for a wide range of commercial uses. This is consistent with the land use pattern in the general area as there a variety of commercial uses including retail, automobile sales as well as offices. In terms of compatibility with the abutting residential project, the property was previously granted a variance from required rear setback and the proposed use would not expand the current size of the commercial buildings that would affect said variance.

2. Granting the Minor Conditional Use Permit will not be detrimental to the health, safety and general welfare of the public or other properties or improvements within the immediate vicinity because the development is existing and no improvements to the existing buildings or site are proposed. The units will be occupied by existing and proposed incubator business tenants with little or no employees and/or customers. The garages can be used for storage and/or parking and the storage would be solely for the individual tenants in the garage attached to their suite. No storage will be allowed outside of the garage.

3. Granting the Minor Conditional Use Permit will not allow a use, density or intensity that is not in accordance with the General Plan designation for the property since the proposed uses are permitted per the City's Land Use Matrix. Even though the proposal is for storage in the garages serving the office uses, the storage is in conjunction and incidental to the existing commercial use.

Furthermore, the proposed use will not expand the size of the existing buildings since the storage use will be within a portion of the existing garages.

B. The information presented complies with Costa Mesa Municipal Code Section 13-29(e) in that:

1. There will be a compatible and harmonious relationship between the proposed building and the site development, and use(s), and the building and site developments, and uses that exist or have been approved for the general neighborhood. The subject property is an existing development and no exterior/interior changes to the existing building is proposed. The property has a General Plan Land Use designation of General Commercial, which is intended for a wide range of commercial uses. This is consistent with the land use pattern in the general area as there a variety of commercial uses including retail, automobile sales as well as offices. In terms of compatibility with the abutting residential project, the property was previously granted a variance from required rear setback and the proposed use would not expand the current size of the building that would affect said variance.

2. Safety and compatibility of the design of buildings, parking area, landscaping, luminaries, and other site features which may include functional aspects of the site development such as automobile and pedestrian circulation have been considered and will not be affected by the proposed use since no improvements to the existing building or site are proposed. The proposed storage use will not change the building design or expand the building size as the use will be within the existing garages. No additional parking is required since the storage use is in conjunction with the individual, small incubator business tenants with little or no employee and/or customer traffic. Changes to the garages will not be permitted so if parking impacts arise, the garages can revert to use for parking only. All other development standards including landscaping shall comply as required by the Zoning Code.

3. The proposed use complies with performance standards described elsewhere in the Zoning Code. All development standards, including interior landscaping, will comply with the Zoning Code.

4. The structure is consistent with the General Plan, specifically Land Use Element Policy LU-6.7 and LU-6.15.

5. This zoning application is for a project-specific case and is not to be construed to set a precedent for future development.

C. The project has been reviewed for compliance with the California Environmental Quality Act (CEQA), the CEQA Guidelines, and the City environmental procedures, and has been found to be exempt under Section 15301, Class 1, Existing Facilities, of the CEQA Guidelines.

D. The project is exempt from Chapter XII, Article 3, Transportation System Management, of Title 13 of the Costa Mesa Municipal Code.

CONDITIONS OF APPROVAL

Plng. 1. The project shall be limited to the type of use as described in this staff report and in the attached plans: To allow storage within the existing, downstairs two-car garages by the tenants who lease the garages as a part of their upstairs office. To ensure parking impacts are not generated with the storage, the businesses shall be limited to small, incubator businesses with few or no employees and/or customers; garages can only be used for parking and/or storage – no improvements may be made inside the garages that would prohibit the use of the spaces for parking; that each unit tenant space is limited to two parking spaces; and that the tenants and any employees/customers may not park on the public street or within the surrounding neighborhood. If it becomes apparent that the approval is generating parking impacts, the garage spaces could revert to required parking. Any change in the use, size, or design shall require review by the Planning Division and may require an amendment to the Minor Conditional Use Permit.

2. Parking spaces shall be striped in accordance to the City's Parking Design Standards.

3. The conditions of approval, code requirements, and special district requirements of ZA-18-50 shall be blueprinted on the face of the site plan as part of the plan check submittal package.

4. If parking shortages or other parking-related problems arise, the business operator shall institute appropriate operational measures necessary to minimize or eliminate the problem – including the reduction of or prohibition of storage inside the garages.

5. The applicant shall contact the Planning Division to arrange a Planning inspection of the site prior to final inspections by the Building Division. This inspection is to confirm that the conditions of approval and code requirements have been satisfied.

Eng. 6. A Construction Access Permit and deposit of $730 will be required by City of Costa Mesa, Engineering Division prior to start of any on-site work, necessary during construction for street sweeping and to guarantee replacement costs in case of damage to existing public improvements.

Bldg. 7. Prior to issuing the Building permit the conditions of approval shall be required to be incorporated on the approved Architectural plans.

CODE REQUIREMENTS

The following list of federal, state, and local laws applicable to the project has been compiled by staff for the applicant's reference. Any reference to "City" pertains to the City of Costa Mesa.

Plng.

1. Approval of the planning application is valid for two years from the effective date of this approval and will expire at the end of that period unless applicant establishes the use by obtaining building permits for the authorized construction and initiates construction. If the applicant is unable to obtain building permits within the one-year time period, the applicant may request an extension of time. The Planning Division must receive a written request for the time extension prior to the expiration of the planning application.
2. All construction-related activity shall be limited to between the hours of 7 a.m. and 7 p.m., Monday through Friday, and 9 a.m. to 6 p.m. Saturday. Construction is prohibited on Sundays and federal holidays. Exceptions may be made for activities that will not generate noise audible from off-site, such as painting and other quiet interior work.
3. Installation of all utility meters shall be performed in a manner so as to obscure the installation from view from any place on or off the property. The installation vault, wall cabinet, or wall box shall be installed under the direction of the Planning Division.
5. Any new mechanical equipment such as air-conditioning equipment and duct work shall be screened from view in a manner approved by the Planning Division. All roof-mounted equipment is prohibited.
6. A minimum of 400 square feet of interior landscaped area shall be provided under the direction of Planning staff. The interior landscaped areas shall be visible within the existing parking lot area and the view shall not be obstructed by a gate or other structures.
7. Two sets of detailed landscape and irrigation plans, which meet the requirements set forth in the Costa Mesa Municipal Code Sections 13-101 through 13-108 and the City's Water Efficient Landscape Guidelines, shall be required as part of the project plan check review and approval process. Plans shall be forwarded to the Planning Division for final approval prior to the issuance of building permits.
8. Landscaping and irrigation shall be installed in accordance with the approved plans prior to final inspection or occupancy clearance.
9. All unpaved areas visible from public right-of-ways shall be landscaped and the landscaping shall be maintained in a healthy condition, free of dying, dead, diseased, decayed, discarded, and/or overgrown vegetation.
10. Trash facilities shall be screened from view, and designed and located appropriately to minimize potential noise and odor impacts to neighbors.

Bldg.

11. Comply with the requirements of the following adopted codes Code, 2016 California Building Code, 2016 California Electrical code, 2016 California Mechanical code , 2016 California Plumbing code , 2016 California Green Building Standards Code and 2016 California Energy Code (or the applicable adopted, California Building code California Electrical code, California Mechanical code California Plumbing Code, California Green Building Standards and California Energy Code at the time of plan submittal or permit issuance) and California Code of Regulations also

known as the California Building Standards Code, as amended by the City of Costa Mesa. Requirements for accessibility to sites, facilities, buildings and elements by individuals with disability shall comply with chapter 11B of the 2016 California Building Code.

12. Prior to the Building Div. issuing a demolition permit contact South Coast Air Quality Management District (AQMD) located at:

    21865 Copley Dr.
    Diamond Bar, CA 91765-4178
    Tel: 909- 396-2000

    Or

    Visit their web site
    http://www.costamesaca.gov/modules/showdocument.aspx?documentid=23381

    The Building Div. will not issue a demolition permit until an identification number is provided by AQMD.

13. Comply with the requirements of the California Department of Food and Agriculture (CDFA) to determine if red imported fire ants exist on the property prior to any soil movement or excavation. Call CDFA at (714) 708-1910 for information.

Bus. Lic. 14. All contractors and subcontractors must have valid business licenses to do business in the City of Costa Mesa. Final inspections will not be granted until all such licenses have been obtained.

SPECIAL DISTRICT REQUIREMENTS

The requirements of the following special districts are hereby forwarded to the applicant:

Sani. 1. It is recommended that the applicant contact the Costa Mesa Sanitary District at 949.645.8400 for current district requirements.

AQMD 2. Applicant shall contact the Air Quality Management District (800) 288-7664 for potential additional conditions of development or for additional permits required by AQMD.

CDFA 3. Comply with the requirements of the California Department of Food and Agriculture (CDFA) to determine if red imported fire ants exist on the property prior to any soil movement or excavation. Call CDFA at (714) 708-1910 for information.

AQMD 4. Prior to the Building Division issuing a demolition permit contact South Coast Air Quality Management District (AQMD) located at: 21865 Copley Dr. Diamond Bar, CA 91765-4178, Tel: 909- 396-2000 or visit their web site: http://yourstory.aqmd.gov/home. The Building Division will not issue a demolition permit until an Identification no. is provided by AQMD.

PLANNING APPLICATION SUMMARY

Location:	1908 and 1912 Pomona Avenue	**Application No:**	ZA-18-50
Request:	Minor Conditional Use Permit to amend Conditional Use Permit PA-87-09 to allow storage within the existing garages		

SUBJECT PROPERTY:		**SURROUNDING PROPERTY:**	
Zone:	C1, Local Business District	**North:**	C1, Local Business District
General Plan:	General Commercial	**South:**	C1, Local Business District
Lot Dimensions:	1908 Pomona: 63.5 FT by 125 FT 1912 Pomona: 63.5 FT by 125 FT	**East:**	R3, Multi-Family Residential District
Lot Area:	1908 Pomona: 7937.5 SF 1912 Pomona: 7937.5 SF	**West:**	C1, Local Business District
Existing Development:	Each property contains an existing 2,720 sq. ft. two-story commercial building		

DEVELOPMENT STANDARD COMPARISON

DEVELOPMENT STANDARD	REQUIRED/ALLOWED	PROPOSED/PROVIDED
Lot Size:	12,000 SF	1908 Pomona: 7937.5 1912 Pomona: 7937.5
Lot Width:	60'	1908 Pomona: 63.5' 1912 Pomona: 63.5'
Driveway Width:	20 FT	1908 Pomona: 23 FT 3 IN 1912 Pomona: 23 FT 3 IN
Parking:	22	Open: 16 Covered: 16[1]
Interior landscaping area	25 SF per parking space/400 SF	447 SF
Building Height:	2 stories/30 FT maximum	1908 Pomona: 2 stories/28 FT 1912 Pomona: 2 stories/28 FT
Building Setbacks:		
Front	20 FT	1908 Pomona: 20 FT 1912 Pomona: 20 FT
Side (left/right)	0 FT one side;15 FT on the other side	1908 Pomona: 41 FT/0 FT 1912 Pomona: 0 FT/42 FT
Rear	56 FT	1908 Pomona: 5 FT[2] 1912 Pomona: 5 FT[2]
FAR:	.40 (Low Traffic Uses)	.62[3]
CEQA:	Exempt per CEQA Section 15301, Existing Facilities (Class 1)	
Final approval:	Zoning Administrator	

[1]Parking deviation requested to allow storage in all or part of the existing 16 garage spaces
[2] Variance granted for reduced rear setback per PA-87-09
[3] Existing legal non-conforming

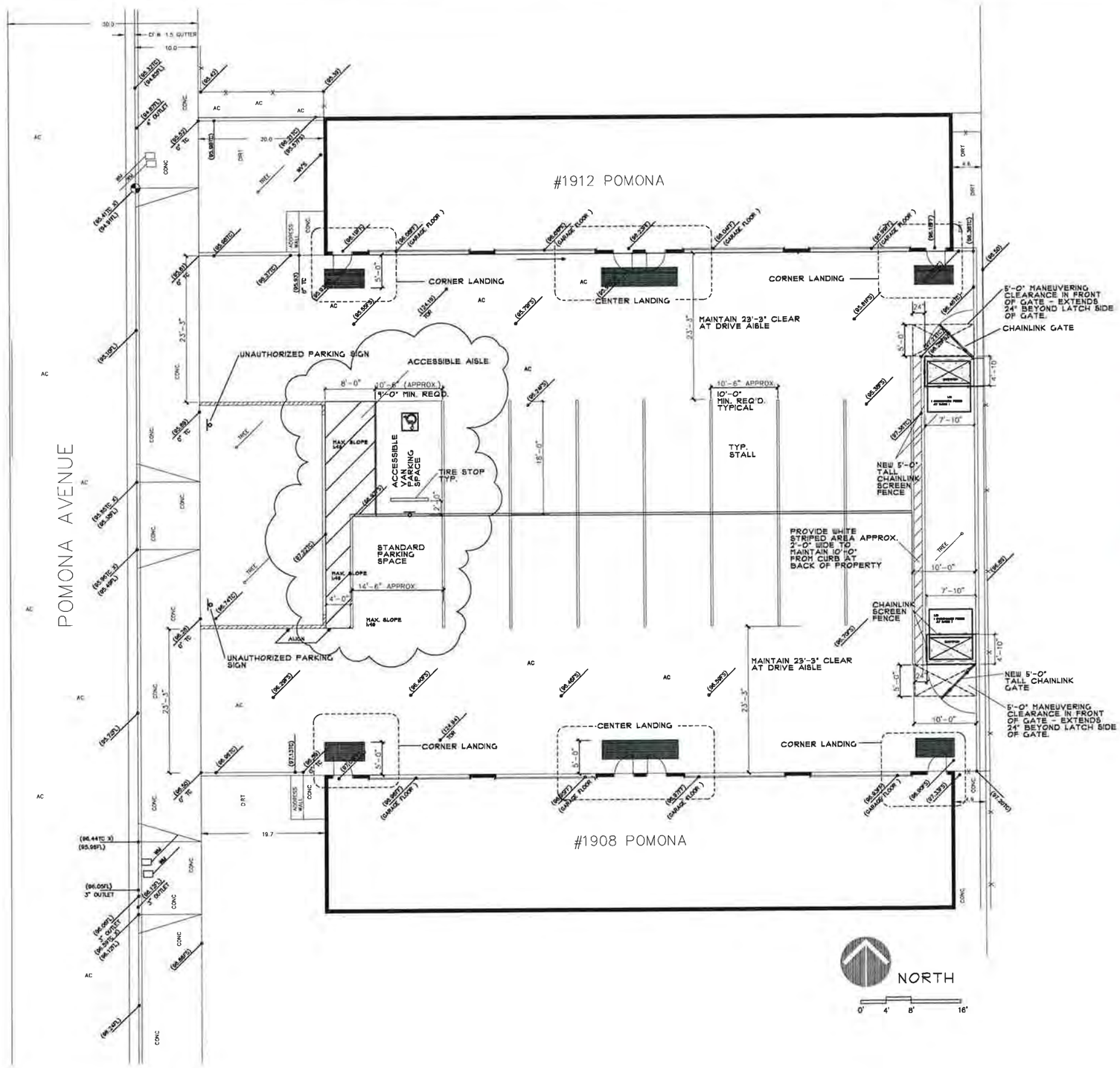

MINOR CONDITIONAL USE PERMIT/
~~ADMINISTRATIVE ADJUSTMENT~~ NO. ZA-18-50

Approval in Concept

SUBJECT TO CONDITIONS
CITY OF COSTA MESA
PLANNING DEPT.

BY WBK/N.HUYNH DATE 12/6/18

HOSKINS+HOSKINS

1690 Minorca Place
Costa Mesa, California 92626
Tel 714.641.0990

Interior Planning & Design

1908 & 1912 POMONA AVE.
COSTA MESA, CA

REVISIONS

NO.	DESCRIPTION	DATE

DATE 9/27/2017

SHEET TITLE
EXISTING SITE PLAN & PARKING PLAN

SHEET NUMBER
A2

Applicant Letter

RE: 1908 & 1912 Pomona Ave, Costa Mesa CA

Property: The property consists of two identical buildings each with four commercial units. The buildings are two stories with office on the second floor and garage space on the first floor. The office square footage of each unit is roughly 680 sf and the garage space is 548 sf (See Exhibit A for example unit). Total sf of office in all buildings is 5,400 sf and total garage sf is 4,384 sf. The exterior parking consists of 16 parking spaces that are oversized per city parking guidelines. Additionally, each unit has two garage parking spaces.

Issue: The City of Costa Mesa has mandated that the garage parking (two spaces for each unit) be maintained as parking and do not allow storage in the garage. The property has historically been used by tenants as very small businesses that utilize the garage space as storage and parking. The previous eight tenants that occupied the building, five tenants only utilized one employee and one car for parking and the remaining three had a maximum of one employee and some were not even there on a consistent basis. Five units were individual tinkers and hobbyist that utilized the space for ad-hoc projects. A couple tenants were construction based individuals that utilized the space for storage and some miscellaneous office but were not on-site every day.

Due to the very small sf of the office space – tenant businesses consist of one or two total employees. As new owners we are having difficulty attracting tenants with this issue. However, anyone who visits the buildings can see that the type of tenants that are attracted to this space will utilize the garages for some type of storage with a small office and very few employees thereby limiting the necessary parking. To prove this point, we are providing a list of prospective tenants and their parking needs based upon their businesses. (Exhibit B)

Request: We are requesting the City of Costa Mesa accept our new parking plan which will add two more parking spots to the exterior parking area (see A3). In addition, we are requesting the City of Costa Mesa approve a minor conditional use permit for all new tenants that will be approved by the City of Costa Mesa which will allow the new tenants to utilize the garage space for storage and parking. Any new tenants will parking requirements will not exceed the available parking on the premises. We want to limit the garage area to storage and parking only and under no circumstances can be used as office or any other use.

Applicant: Tom St.Clair

Email: tstclair@rincongrp.com

Phone Number: 714.724.5647

Exhibit A

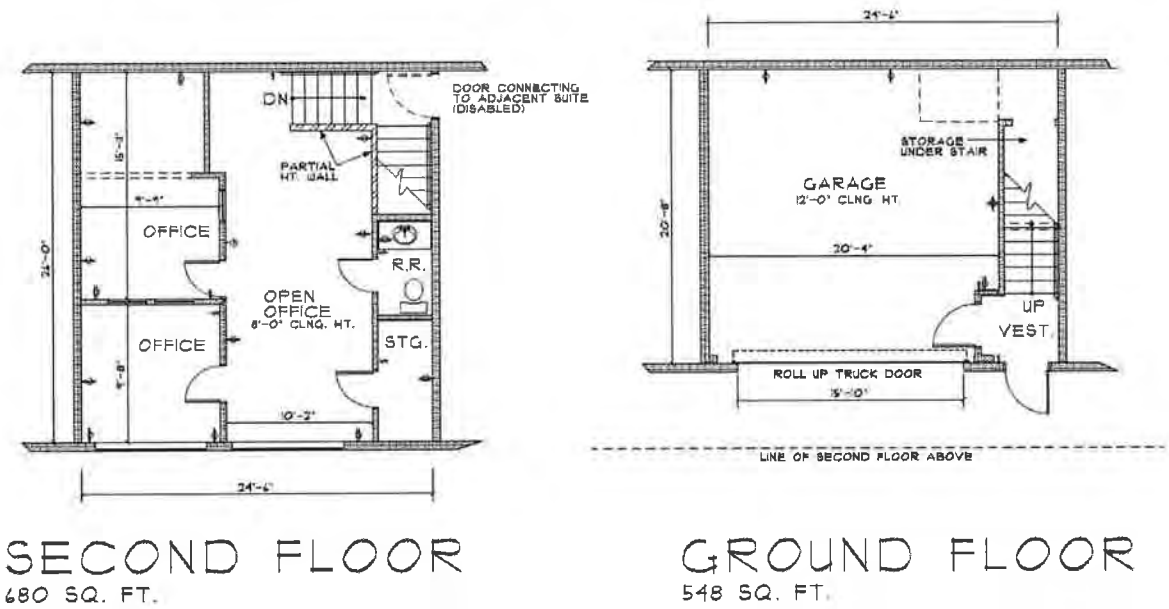

1908 POMONA AVENUE – UNIT C
COSTA MESA, CA

AS-BUILT FLOORPLAN
1,228 SQUARE FEET

0' 4' 8' 16'

HOSKINS+HOSKINS

1690 Minorca Place
Costa Mesa, California 92626
Tel 714.641.0660

Interior Planning & Design

Exhibit B

Company	Business Description	Use	Total Employees	Total Customers	Status
Shining Sea Imports	Nutritional Products	Office and Storage	2	0	Signed Lease
Korey Hampp	On Line Sales Company	Office and Storage	2	0	Very Interested
Dana Smith	Midnight Confetti	Office and Storage	2	0	Interested
Shawn Lopez	Hair Stylist	Office	1	1	Very Interested
Elliot Doostmard	Home Staging	Office and Storage	2	0	Interested
Haynes Cabinet Design	Cabinet Designing	Office and Storage	2	0	Visiting Property soon