CITY CLERK

CITY OF COSTA MESA

CALIFORNIA

TRANSITION AND SELF-EVALUATION REPORT

AS REQUIRED BY

THE AMERICANS WITH DISABILITIES ACT - TITLE II

JUNE 22, 1992

CITY OF COSTA MESA

TRANSITION AND SELF-EVALUATION REPORT

- TABLE OF CONTENTS
- INTRODUCTION TO THE CITY
- CREDITS
- SUMMARY
    - SELF EVALUATIONS
        - INTRODUCTION
        - FINDINGS
        - COST ESTIMATE
- INITIAL TRANSITION PLAN
- PUBLIC HEARING
    - PUBLIC HEARING NOTICE
- GRIEVANCE PROCEDURE
    - MATTERS SUBJECT TO GRIEVANCE PROCEDURE
    - MODEL COMPLAINT FORM - HEARING OFFICER
- TRANSITION PLAN
- BUDGET REPORT
- ATTACHMENT

I SELF EVALUATION REPORTS

.1 FACILITIES
.2 INFRASTRUCTURE CURBS/SIDEWALKS
.3 PARKS/SERVICES
.4 FIRE FACILITIES
.5 RECURRENT/CURRENT EMPLOYEES SPECIAL NEEDS
.6 COMMUNICATIONS
.7 ADA FUNDING

II FOLLOW UP INSPECTIONS BY BUILDING STAFF

III INFORMATION PROVIDED TO SURVEYORS

IV PUBLIC HEARING HIGHLIGHTS

V LEGAL REPORTS/INTERPRETATIONS

Report prepared by Tony C'De Baca
ADA Coordinator

ADA TASK FORCE

- TONY C'DE BACA - ASST. DEV. SVS. DIR./BLDG & CODE ENF.
- RICK PICKERING - ASST. TO THE CITY MANAGER
- SALLY MAY - DEPUTY CITY ATTORNEY
- GERALD VERWOLF - COMMUNICATIONS OPERATIONS MANAGER
- TOM MACDUFF - FIRE MARSHAL
- DAVID ALKEMA - PARKS SUPERINTENDENT
- BARBARA SURGES - ADMINISTRATIVE ASST. - REDEVELOPMENT
- CAROL JACOBS - ADMIN. ASST.- PUBLIC SERVICES DEPT.
- DEBRA JACKINS - PERSONNEL ANALYST
- MIKE DI GIOVANNI - MAINTENANCE SUPERVISOR
- ROBERT JOHNSON - TRANSPORTATION
- TOM WARNACK - POLICE DEPARTMENT LIEUTENANT
- RON MINCER - DISABLED COMMUNITY REP./ADVISOR

MEMBERS OF THE BOARD OF APPEALS

- FRANK COLE
- VALENTINE DEMBINSKI

SUMMARY

INTRODUCTION

On March 23, 1992, the City Manager of Costa Mesa formed a task force to study the effects of the ADA and to proceed with a self-evaluation study.

Due to the variety of tasks assigned to the different departmental staff members, a meeting was held on April 2, 1992.

The first order of business was to delegate to the various departments the duties necessary to complete the survey within their own areas of responsibility. They were provided with model surveys and summarized ADA requirements to assist them with their surveys. Community Services surveyed parks and community services programs. Public Services surveyed the infrastructure, curbs and sidewalks, and the facilities owned and managed by the City of Costa Mesa. The Fire Department surveyed the Fire Prevention Bureau offices and fire stations. The Personnel Department surveyed the City's recruitment practices, policies, and the special needs of the current employees. Communications reviewed the needs of the hearing impaired. Police Department reviewed the needs of those who are detained at the police facility and who may have special needs. The results of these surveys are included in this report.

Due dates were established as a normal course of follow-up task force meetings and a completion date was set of June 22, 1992 for a draft report of the activities and findings of this task force. A public hearing was set for June 25, 1992 to be conducted by the City's Board of Appeals with findings to be later incorporated into this report.

SELF EVALUATION FINDINGS

The survey reports revealed that many City owned facilities contained architectural barriers which posed obstacles to the disabled community according to the ADA requirements.

The Civic Center is of prime concern as a result of this survey since it is the center of the City's activities. The path of travel including parking, ramps, doors, doormats, and non-skid surfaces will require modification . The bathroom doors, modesty walls, sinks, fixtures, stalls, and water fountains will also need to be modified to bring this facility into compliance with the ADA. Access from the City Council chambers to rest room facilities is also of concern.

The downtown community center, the neighborhood community center, the police facility, police sub station, the communications building, Mesa Verde library, the job center, the Baleric center, the Rea center, the old corporation yard, the fire prevention bureau, fire station offices, parks, golf course, curb cuts, and side walks all have similar architectural barriers to the path of travel. The rest room facilities also need modifications in order to bring them into ADA compliance.

COST ESTIMATE

The cost of the modifications, in order to comply with ADA requirements, is approximately $10.6 million . This breaks down as follows:

City Facilities	$ 750,000.00
Curbcuts/Sidewalks	9,500,000.00
Parks	125,000.00
Community Services Programs	50,000.00
Fire Facilities	65,000.00
Recruitment and current employees special needs	21,900.00
Miscellaneous	45,000.00
	==========
Total	$10,556,900.00

INITIAL TRANSITION PLAN

During this study it was found that City Hall is deficient in it's compliance with ADA, 504, and Title 24 regulations.

The interim plan is to secure the services of an architect and contract for the building modifications that need to be made in order to bring this building into reasonable compliance. The primary areas of concern will be the path of travel, including parking, curbs, ramps, handrails, lifts, doors, non-skid surfaces, imbedded doormats, toilet facilities (including modesty wall relocation), door widths, sinks, stalls, and fixtures. The design and construction will take place as soon as it is feasibly possible. The remaining areas of concern will be acted upon as reasonable concerns are brought to the City's attention by aggrieved individuals. Any changes\modifications to the City facilities as a result of these grievances will be acted upon at the availability of City funding.

The cost of this interim plan is roughly estimated at $45,000.

PUBLIC HEARING

A public hearing is scheduled for June 25, at 6:30 p.m. at the City Hall Council Chambers.

A copy of this notice is provided herein.

PUBLIC HEARING

A public hearing is scheduled for June 25, at 6:30 p.m. at the City Hall Council Chambers.

A copy of this notice is provided herein.

PUBLIC NOTICE

PUBLIC HEARING FOR ADA TITLE II

ACCESS TO PUBLICLY-OWNED FACILITIES

ACCESS TO PUBLICLY-SPONSORED AND PROVIDED ACTIVITIES, SERVICES AND PROGRAMS

THE CITY OF COSTA MESA INVITES COMMENTS AND PUBLIC TESTIMONY ON A DRAFT REPORT PREPARED IN COMPLIANCE WITH REQUIREMENTS SET FORTH IN TITLE II OF THE AMERICANS WITH DISABILITIES ACT. TESTIMONY WILL BE TAKEN, EVALUATED, AND INCORPORATED INTO THE FINAL REPORT. THE DRAFT REPORT WILL BE AVAILABLE ON JUNE 22, 1992, AT THE BUILDING AND CODE ENFORCEMENT DIVISION IN CITY HALL, 77 FAIR DRIVE, 2ND FLOOR, FOR REVIEW. COPIES OF THE DRAFT REPORT WILL ALSO BE AVAILABLE FOR REVIEW AT THE PUBLIC HEARING.

THIS PUBLIC HEARING WILL BE HELD AS FOLLOWS:

DATE: Thursday, June 25, 1992

TIME: 6:30 p.m. or as soon as possible thereafter

PLACE: City Council Chambers at City Hall
77 Fair Drive, Costa Mesa, California

PUBLIC COMMENTS IN EITHER ORAL OR WRITTEN FORM MAY BE PRESENTED DURING THE PUBLIC HEARING. FOR FURTHER INFORMATION, TELEPHONE 754-5277, OR VISIT THE BUILDING DIVISION, SECOND FLOOR OF CITY HALL, 77 FAIR DRIVE, COSTA MESA, CALIFORNIA. THE BUILDING DIVISION IS OPEN 8:00 A.M. TO 5:00 P.M., MONDAY THROUGH FRIDAY.

OFFICIAL PUBLIC NOTICE

GRIEVANCE PROCEDURE

Matters Subject to Grievance Procedure

Any alleged violations of the ADA by the City in its facilities, programs or services are subject to review through this grievance procedure. Only those individuals having a "disability" as defined by the ADA, or their authorized representatives, are eligible to file complaints pursuant to this procedure.

Grievance Procedure

1. A complaint may be filed, in writing, with the City's Building/Code Enforcement Division, second floor, City Hall, 77 Fair Drive, Costa Mesa 92628. The complaint may also be filed with the City Clerk's Office on the first floor of City Hall, marked "Attention: Building/Code Enforcement Division." Where necessary, complaints may also be lodged by telephone at (714) 754-5273 or (California Relay Service, 1-800-735-2929) where TDD service is required.

2. Once filed, investigation of the complaint will be commenced by City staff within 72 hours of receipt.

3. Within 30 days of the City's receipt of the complaint, the complainant will be notified of City staff's findings, and proposed corrective action, if any, to be undertaken to remedy the subject violation in compliance with the ADA.

4. If the complainant is not satisfied with the City staff's findings and/or proposed corrective action, he/she may request, within 10 days of receipt of such findings, a review and hearing of the complaint by the ADA coordinator, who shall act as the Hearing Officer. The Hearing Officer shall notify the complainant of his/her findings within 10 days after the hearing.

5. If the grievance is not satisfactorily resolved after hearing by the Hearing Officer, the complainant may request, within 10 days of receipt of the Hearing Officer's findings, a hearing before the City of Costa Mesa Board of Appeals. The hearing will be set at the next scheduled meeting of the Board, but in no event later than 30 days after the request for hearing is lodged with the ADA coordinator. The decision of the Board shall be final.

CITY OF COSTA MESA
COMPLAINT OF DISCRIMINATION
ON THE BASIS OF DISABILITY

Identity of individual who believes he/she has been discriminated against on the basis of disability:

_____

Name Address Telephone No.

Have you authorized someone to file this complaint on your behalf:
___ Yes ___ No. If yes, please provide the following information for the authorized representation:

_____

Name Address Telephone No.

Please describe the city's alleged discriminatory action in enough detail so that the nature of your complaint can be clearly understood:

_____
_____
_____
_____

Please give the date(s), time(s) and location(s) of the incident(s):

_____
_____
_____
_____

If the incident(s) involved a city employee(s), please provide his or her name(s) and/or badge number(s), if you know this information:

_____
_____
_____
_____

Please give the name(s) and address(es), if known, of any witnesses to the alleged discrimination:

_____
_____
_____
_____

If this complaint is filed on behalf of a group of people or on behalf of a third person, please provide the names and addresses of all of the victims of the alleged discrimination, if possible:

_____
_____
_____

THE TRANSITION PLAN

The Transition Plan is a part of this required initial survey which has been completed.

The first phase of the Plan will serve as the immediate vehicle for addressing noted barriers which are of concern to the community within a reasonable time frame and allocate actions according to available resources.

- Review building plans to bring City Hall into compliance as soon as practicable as required by ADA and Section 504 of The Rehabilitation Act.
- Appropriate funds to renovate, retrofit and modify City Hall to comply with the ADA and Section 504 of The Rehabilitation Act.
- Prioritize improvements and retrofit of non-City Hall facilities for compliance based on available resources.

The second phase of the transition plan addresses the following:

- Finalize building plans and specifications addressing architectural barriers restricting access to the disabled community.
- Complete third party review by disabled access specialists prior to recommending correction action and retrofit.
- Finalize cost estimates and identify funding sources for the removal of barriers from City facilities, programs, and services.
- Implement a critical path schedule for the removal of these barriers.
- Complete findings on the areas which will not be considered reasonable to comply with.
- Schedule retrofits of curbs, ramps and sidewalks to comply with ADA requirements.

The City of Costa is required to establish a responsible officer to insure compliance with the American's with Disability Act requirements. The City of Costa Mesa designated the Building Official as the person responsible in this jurisdiction.

BUDGET REPORT

ADA BUDGET/FUNDING REPORT
JUNE 19, 1992

OVERVIEW

While the City of Costa Mesa is committed to ensuring equal access to all levels of local government services and programs, it must do so in light of ever shrinking resources and ever growing demands for services. Cities in general are at the bottom rung of intergovernmental funding and must constantly plan for and react to funding reductions or modifications at the Federal, State and County level. Costa Mesa has lost approximately $3.5 million annually to these higher levels of government over the last two years. Current proposals before the State's Governor and Legislature could jeopardize upwards of an additional $3.2 to $6.6 million annually.

It should also be noted that California Cities are greatly limited in their ability to raise taxes. Specifically, Proposition 13 established annual maximum growth rates for property taxes. In many instances this property tax growth rate falls far short of the increased demands for services. Any general tax increase also requires a two-thirds majority vote making it all but impossible to raise taxes.

USE OF FUNDS

Given such limited resources, the City has endeavored to facilitate access for disabled individuals on an ongoing basis. Specifically, the City contracted with the Dayle McIntosh Center several years ago to conduct periodic reviews of City facilities and formulate appropriate recommendations. To date, each recommendation has been undertaken and completed. The City plans to have the Center participate in reviewing City facilities for compliance with the new ADA standards.

The City undertook the installation of numerous handicap access ramps, elevators, signage, etc., (costing in excess of $1 million) prior to the adoption of the new ADA regulations.

Currently, the City has set aside $100,000 ($50,000-FY 1991-92; $50,000-FY 1992-93) to facilitate those items and activities associated with the ADA Transition Plan. Highest funding priority has been given to City Hall. The breakdown of additional priorities is attached for reference anD review.

FUNDING PRIORITIES

1. **CITY HALL - Access, services, mobility, and accommodations.**

2. **COMMUNITY CENTERS - Access, mobility, and accommodations for City owned Community Centers.**

3. **FIRE & POLICE SATELLITE FACILITIES - Access, services, mobility, and accommodations.**

4. **LIBRARIES, COMMUNITY CENTERS & JOB CENTER - Access, services, mobility and accommodations for non-City owned facilities.**

5. **PARK FACILITIES - Access, mobility and accommodations.**

6. **COMPLAINTS REGARDING TRAVELED WAY ACCESS.**

7. **ARTERIAL/COMMERCIAL TRAVELED WAYS - Access.**

8. **RESIDENTIAL TRAVELED WAYS - Access.**

NOTE: Funding priority is given to those facilities and areas which provide the greatest service to the public on a day to day bases. Access to streets and sidewalks (Traveled Ways) has been separated into three levels: a. Complaints, b. Arterial/Commercial streets, and c. Residential areas.

ATTACHMENT I

SELF EVALUATION REPORTS

ATTACHMENT I.1

SELF EVALUATION
FACILITIES REPORT

ATTACHMENT I.2

SELF EVALUATION INFRASTRUCTURE CURB CUTS/SIDEWALK REPORT

AMERICAN WITH DISABILITIES ACT TITLE II INSPECTION ASSESSMENT:

The Costa Mesa City Hall Building, 77 Fair Drive, has regulation handicapped parking spaces. One entrance to the building is accessible with a regulation ramp. Doors do not comply due to pressure needed to open them. All restrooms need to be completely remodeled to include: Proper wheelchair entrance, replace faucets, install paper towels & hand soap dispensers at proper height, remove sink cabinets, etc.; remodeling the elevators is in progress, and they will meet codes.

Cost estimate: $119,200

The Police Building, 99 Fair Drive, has necessary handicapped parking space. Curb access needs to be improved. Restrooms will need to be completely remodeled to remove the same handicapped barriers as the City Hall Building. This building does not have elevators. The basement and second floors are not wheelchair accessible. Cost estimate includes elevator access.

Cost estimate: $422,800

The Communications Building, 79 Fair Drive, does not have a designated handicapped parking spot. The dispatch area was not designed for wheelchair access. Faucets need to be replaced, paper towel & soap dispensers need to be lowered.

Cost estimate: $25,500

The Mesa Verde Library, 2969 Mesa Verde Drive East, has handicapped parking space. The front entrance ramp it too steep, the rear of building has a ramp that is in compliance. The restrooms at this facility are not in compliance. This is leased to the County of Orange.

Cost estimate: $154,000

The Downtown Community Center, 1860 Anaheim Street, has handicapped parking; however, the ramp is not regulation. Restroom entrances are not in compliance, sinks and dispensers need to be lowered and faucets need replacing. The telephone needs to be lowered.

Cost estimate: $13,100

The Neighborhood Community Center, 1845 Park Avenue, is in compliance except for the following: Replace faucets and lower dispensers in all restrooms.

Cost estimate: $4,000

The Police Substation, 570 W. 18th Street, needs remodeling in the restrooms.

Cost estimate $61,000

The Job Center, 1697 Placentia, needs to remodel the restrooms for wheelchair access, lower dispensers and phone, replace sinks, install to code.*

Cost estimate: $15,000

The Balearic Center, 1975 Balearic Drive, needs remodeling in the restrooms to comply with codes and needs handicapped phone.*

Cost estimate: $24,000

The Rea Center, 661 Hamilton Street, is in compliance with most requirements due to present handicapped use. Remaining areas not in compliance are: Restroom doors do not open properly, faucets need to be replaced, two ramps need to be installed, and the phone needs to be lowered.*

Cost estimate: $11,150

The New Corporation Yard, 2310 Placentia Avenue, is a new facility and appears to be in compliance with existing codes.

The Old Corporation Yard, 2300 Placentia Avenue, is scheduled to be remodeled in the near future. Restrooms need to be remodeled, phone needs to be installed, drinking fountain needs to be lowered, and parking spaces need to be marked.

Cost estimate: $12,800

* This Center is a lease hold, and it is to be determined who is the responsible party.

SELF EVALUATION FOR PRIORITIZED COMPLIANCE WITH THE AMERICANS WITH DISABILITIES ACT (A.D.A)
TRANSPORTATION FACILITIES

Any proposed removal of barriers or other provision to accommodate access to public facilities, must meet the test of "reasonable accommodation". Therefore, a warranting procedure must be established to qualify any and all improvements proposed for inclusion into City Projects.

Prioritized compliance with the A.D.A. requirements will generally accord with the following outline.

1. The highest priority was assumed to be direct written requests by persons with disabilities.

This estimate reflects a review of the requests presently on file in the Public Services Division. It must be understood, however, that some of these requests are for the installation of sidewalks, in some cases, which would involve the acquisition of right-of-way. This in itself may place the requested improvement beyond the limits of reasonable accommodation.

2. The second priority was assumed to be bus facilities specifically bus stops not presently accessible by persons with disabilities.

The estimate reflects a review of locations identified in a letter to the City of Costa Mesa dated November 13, 1985, that was provided by the Orange County Transit District. The District has been contacted in an effort to obtain any updated information which may be in their possession. No assumption for the acquisition of right-of-way as been made. Also included was a review of the "Bethel Towers" Senior Citizen building. Harbor Development Center and Harbor Village Apartments, were found be in virtual compliance and no immediate improvements were deemed necessary at this priority level.

3. Third assumed in priority was the elimination of barriers to any Master Plan of Arterial Highway street. This was because of the higher volume of usage anticipated for these streets. No assumption was made for the acquisition of right-of-way.

The self evaluation reflects a raw count of locations identified on the current Master Plan. Deleted from this total was any barriers expected to be removed by addressing earlier priorities.

Added to this total was any wheel chair ramps that are estimated to be constructed at existing cross walks. No assumption was made for the acquisition of right-of-way.

4. The final Priority is to eliminate barriers to disabled persons in the remaining Residential areas.

The self evaluation reflects a raw count of locations identified on City of Costa Mesa Aerial photographs for the entire city. All intersections were assumed to require access at present or at sometime during the future. No assumption was included for the acquisition of right-of-way. The existing locations containing wheel chair ramps were assumed to be deficient with respect to the current A.D.A. design standards and were estimated to require complete retrofiting. Deleted from the evaluation were barriers assumed to be eliminated through earlier priorities.

The priorities presented in this report are intended for study purposes only and represent one logical approach to quantifying potential improvements required under A.D.A.

It should be recognized that within the time frames set forth to implement the self evaluation, it is not practical to conduct a physical survey and exhaustive evaluation of the entire city.

The necessary physical surveys and studies related to gathering data to specifically identify the needs of disabled persons city-wide are assumed to be programed as an ongoing feature of implementation of the prioritized transition plan.

It is estimated that the total costs for these improvements in 1992 dollars is 9.5 million dollars.

ATTACHMENT I.3

SELF EVALUATION
PARKS/SERVICES REPORT

AMERICANS WITH DISABILITIES ACT
TITLE II

INSPECTION REPORT

FACILITY NAME Tewinkle Park Court.
>50 employees

FACILITY ADDRESS

NO. OF FLOORS _____ **ELEVATOR: YES NO**

IDENTIFY BARRIERS (provide brief description)

1. Island Not Accessible
COST EST. 5000

2. Ballfield Restrooms have no Ramps
COST EST. 500.00

3. Restrooms Have no Grab Bars, Accessible Sinks
Sinage
COST EST. 1500.00

4.
COST EST.

5.
COST EST.

NAME(S) OF SURVEYOR(S):

DATE OF SURVEY: 5/5/92

ADA:KPORTLAND3/92

AMERICANS WITH DISABILITIES ACT
TITLE II

INSPECTION REPORT

FACILITY NAME Helka Park
>50 employees

FACILITY ADDRESS 257 16th

NO. OF FLOORS _____ **ELEVATOR: YES NO**

IDENTIFY BARRIERS (provide brief description)

1. Grind Lip on Entrance (2)
COST EST. 150.00

2. Restroom Signs
COST EST. 50.00

3. Tot Lot Not Accessible
Also Equipment Replacement COST EST. $ + 30,000

4. _____
COST EST. _____

5. _____
COST EST. _____

NAME(S) OF SURVEYOR(S):

DATE OF SURVEY: 5/6/92

ADA:KPORTLAND3/92

AMERICANS WITH DISABILITIES ACT
TITLE II

INSPECTION REPORT

FACILITY NAME Harper Park
>50 employees

FACILITY ADDRESS 425 E 18th

NO. OF FLOORS _____ **ELEVATOR: YES NO**

IDENTIFY BARRIERS (provide brief description)

1. Tot lot Not accessible
Also Equipment Replacement COST EST. $ 3,000

2. _____ COST EST. _____

3. _____ COST EST. _____

4. _____ COST EST. _____

5. _____ COST EST. _____

NAME(S) OF SURVEYOR(S):

DATE OF SURVEY: 5/5/92

ADA:KPORTLAND3/92

AMERICANS WITH DISABILITIES ACT
TITLE II

INSPECTION REPORT

FACILITY NAME Shiffen Park
>50 employees

FACILITY ADDRESS 3143 Bear St

NO. OF FLOORS _____ **ELEVATOR: YES NO**

IDENTIFY BARRIERS (provide brief description)

1. Tot Lot Not Accessible
Also new Equipment COST EST. $ 5,000
2. Restroom Signs
COST EST. 75.00
3.
COST EST.
4.
COST EST.
5.
COST EST.

NAME(S) OF SURVEYOR(S):

DATE OF SURVEY: 5/5/92

ADA:KPORTLAND3/92

AMERICANS WITH DISABILITIES ACT
TITLE II

INSPECTION REPORT

FACILITY NAME Canyon Park
>50 employees

FACILITY ADDRESS 970 Arbor

NO. OF FLOORS _____ **ELEVATOR: YES NO**

IDENTIFY BARRIERS (provide brief description)

1. Tot lot Not Accessible

COST EST. $ 2,000

2.

COST EST.

3.

COST EST.

4.

COST EST.

5.

COST EST.

NAME(S) OF SURVEYOR(S):

DATE OF SURVEY: 5/6/92

ADA:KPORTLAND3/92

Community Services Policy

Americans with Disabilities Act

The City of Costa Mesa Community Services Department has reviewed its park facilities and is establishing policy for the purpose of meeting the requirements of the Americans with Disabilities Act (ADA).

Community Services staff has identified various barriers to the handicapped including inexcessible tot lots and play equipment, restrooms, raised concrete, signage, non-accessible walkways, non-accessible picnic facilities and tables, drinking fountains, handicap parking, and various other barriers to the handicapped. $320,000 is anticipated to be spent in Fiscal Year 1992-93 for totlot improvements that will upgrade existing equipment and to provide handicap access.

Other improvements will be prioritized and will be corrected as funding becomes available. Areas that are used by the handicapped on a regular basis of which the City has received verified complaints will receive higher priority than areas used infrequently or where no complaints have been registered.

The Recreation Division has reviewed its programs and has developed the following guidelines to insure compliance with the Americans with Disabilities Act:

1. To assure any person with a disability the opportunities to participate in services, programs, or activities provided by the division except as provided in #4.
2. To provide programs and services in an integrated setting, unless separate or different measures are

necessary to ensure equal opportunity.

3. To assure that all standards and rules will insure individuals with disabilities an equal opportunity to enjoy their services, programs or activities unless necessary for the provisions of the service, program, or activity.
4. To make reasonable modification in policies, practices, and procedures that may deny equal access to individuals with disabilities unless a fundamental alteration in the program exists.
5. To furnish auxiliary aids and services when necessary to ensure effective communication, unless an undue burden or fundamental alteration would exist.
6. No special charges to individuals with disabilities will be made to cover the costs of measures necessary to ensure nondiscriminatory treatment, such as making modifications required to provide program accessibility or providing qualified interpreters.
7. To operate programs so that when viewed in their entirety, they are readily accessible to and usable by individuals with disabilities.

Cost estimated at $125,000

AMERICANS WITH DISABILITIES ACT
TITLE II

INSPECTION REPORT

FACILITY NAME Vista Park
>50 employees

FACILITY ADDRESS 1200 Victoria

NO. OF FLOORS _____ **ELEVATOR: YES NO**

IDENTIFY BARRIERS (provide brief description)

1. Tot lot Not Accessible

COST EST. $5,000

2. Picnic tables Not accessible

COST EST. 750.00

3. _____

COST EST. _____

4. _____

COST EST. _____

5. _____

COST EST. _____

NAME(S) OF SURVEYOR(S):

DATE OF SURVEY: 5/6/92

ADA:KPORTLAND3/92

AMERICANS WITH DISABILITIES ACT
TITLE II

INSPECTION REPORT

FACILITY NAME Fairview Park
>50 employees

FACILITY ADDRESS 2501 Placentia

NO. OF FLOORS _____ **ELEVATOR: YES NO**

IDENTIFY BARRIERS (provide brief description)

1. Restrooms

COST EST. $100,000

2. Park Tables

COST EST. 300 Each

3.

COST EST.

4.

COST EST.

5.

COST EST.

NAME(S) OF SURVEYOR(S):

DATE OF SURVEY: 5/5/92

ADA:KPORTLAND3/92

AMERICANS WITH DISABILITIES ACT
TITLE II

INSPECTION REPORT

FACILITY NAME Tamagon
>50 employees

FACILITY ADDRESS 1780 Hummingbird

NO. OF FLOORS _____ **ELEVATOR: YES NO**

IDENTIFY BARRIERS (provide brief description)

1. Tot lot not Accessible

COST EST. $2,000

2. Tables not Accessible

COST EST. 500.00

3.

COST EST.

4.

COST EST.

5.

COST EST.

NAME(S) OF SURVEYOR(S):

DATE OF SURVEY: 5/5/92

ADA:KPORTLAND3/92

AMERICANS WITH DISABILITIES ACT
TITLE II

INSPECTION REPORT

FACILITY NAME Estancia
>50 employees

FACILITY ADDRESS 1900 ADAMS

NO. OF FLOORS _____ **ELEVATOR: YES NO**

IDENTIFY BARRIERS (provide brief description)

1. Ramp Lip is 1" 75.00
Ramp too Steep COST EST. 7.5,000
2. Restroom Signage
COST EST. 50.00
3.
COST EST.
4.
COST EST.
5.
COST EST.

NAME(S) OF SURVEYOR(S):

[signature]

DATE OF SURVEY: 5/5/92

ADA:KPORTLAND3/92

AMERICANS WITH DISABILITIES ACT
TITLE II

INSPECTION REPORT

FACILITY NAME Mosa Verde
>50 employees

FACILITY ADDRESS 1795 Seman

NO. OF FLOORS _____ **ELEVATOR: YES NO**

IDENTIFY BARRIERS (provide brief description)

1. Tot Lot not Accessible

COST EST. $ 2,000

2.

COST EST.

3.

COST EST.

4.

COST EST.

5.

COST EST.

NAME(S) OF SURVEYOR(S):

DATE OF SURVEY: 5/5/92

ADA:KPORTLAND3/92

AMERICANS WITH DISABILITIES ACT
TITLE II

INSPECTION REPORT

FACILITY NAME Smallwood
>50 employees

FACILITY ADDRESS 1656 Cansica

NO. OF FLOORS _____ **ELEVATOR: YES NO**

IDENTIFY BARRIERS (provide brief description)

1. Restroom Signs
COST EST. 50.00

2. Tot lot not Accessible
Also Replace equipment COST EST. $40,000

3.
COST EST.

4.
COST EST.

5.
COST EST.

NAME(S) OF SURVEYOR(S):

[signature]

DATE OF SURVEY: 5/5/92

ADA:KPORTLAND3/92

AMERICANS WITH DISABILITIES ACT
TITLE II

INSPECTION REPORT

FACILITY NAME Suburbia II
>50 employees

FACILITY ADDRESS 3302 Alabama Ck

NO. OF FLOORS _____ **ELEVATOR: YES NO**

IDENTIFY BARRIERS (provide brief description)

1. No Access (walkway)

COST EST. $5,000

2.

COST EST.

3.

COST EST.

4.

COST EST.

5.

COST EST.

NAME(S) OF SURVEYOR(S):

DATE OF SURVEY: 5/5/92

ADA:KPORTLAND3/92

AMERICANS WITH DISABILITIES ACT
TITLE II

INSPECTION REPORT

FACILITY NAME Suburbia I
>50 employees

FACILITY ADDRESS 3377 California

NO. OF FLOORS _____ **ELEVATOR: YES NO**

IDENTIFY BARRIERS (provide brief description)

1. Ramp Blocked, Lip to High
COST EST. 100.00

2. Tot lot not Accessible
Also Replaced equipment COST EST. ? $40,000

3.
COST EST.

4.
COST EST.

5.
COST EST.

NAME(S) OF SURVEYOR(S):

[signature]

DATE OF SURVEY: 5/5/92

ADA:KPORTLAND3/92

AMERICANS WITH DISABILITIES ACT
TITLE II

INSPECTION REPORT

FACILITY NAME Gisler Park
>50 employees

FACILITY ADDRESS 1250 Gisler

NO. OF FLOORS _____ **ELEVATOR: YES NO**

IDENTIFY BARRIERS (provide brief description)

1. Handicap Parking Sign Missing
COST EST. 75.00

2. Tot lot not Accessible
Also Replace Equipment COST EST. $ 40,000

3.
COST EST.

4.
COST EST.

5.
COST EST.

NAME(S) OF SURVEYOR(S):

[signature]

DATE OF SURVEY: 5/5/92

ADA:KPORTLAND3/92

AMERICANS WITH DISABILITIES ACT
TITLE II

INSPECTION REPORT

FACILITY NAME Wimbledon
>50 employees

FACILITY ADDRESS 3440 Wimbledon

NO. OF FLOORS _____ **ELEVATOR: YES NO**

IDENTIFY BARRIERS (provide brief description)

1. Tables not Accessible

COST EST. 500.00

2. Tot lot not Accessible

COST EST. 5,000

3.

COST EST.

4.

COST EST.

5.

COST EST.

NAME(S) OF SURVEYOR(S):

RaR

DATE OF SURVEY: 5/5/92

ADA:KPORTLAND3/92

AMERICANS WITH DISABILITIES ACT
TITLE II

INSPECTION REPORT

FACILITY NAME Wakeham Park
>50 employees

FACILITY ADDRESS 3400 Smalley

NO. OF FLOORS _____ **ELEVATOR: YES NO**

IDENTIFY BARRIERS (provide brief description)

1. Handicap Signs Missing
COST EST. 100.00

2. Restroom Signs
COST EST. 50.00

3. Tot Lot not Accessible
And Replace Equipment COST EST. $ 40,000

4. ~~Tables Not Accessible~~
COST EST.

5.
COST EST.

NAME(S) OF SURVEYOR(S):
[signature]

DATE OF SURVEY: 5/5/92

ADA:KPORTLAND3/92

AMERICANS WITH DISABILITIES ACT
TITLE II

INSPECTION REPORT

FACILITY NAME Marina View Park
>50 employees

FACILITY ADDRESS 1035 W. 19th

NO. OF FLOORS _____ **ELEVATOR: YES NO**

IDENTIFY BARRIERS (provide brief description)

1. Grind Lip on Entrance

COST EST. 150.00

2. Tot lot not Accessible

COST EST. $5,000

3.

COST EST.

4.

COST EST.

5.

COST EST.

NAME(S) OF SURVEYOR(S):

DATE OF SURVEY: 5/6/92

ADA:KPORTLAND3/92

AMERICANS WITH DISABILITIES ACT
TITLE II

INSPECTION REPORT

FACILITY NAME Wilson Park
>50 employees

FACILITY ADDRESS 360 Wilson

NO. OF FLOORS _____ **ELEVATOR: YES NO**

IDENTIFY BARRIERS (provide brief description)

1. Pot Lot Not Accessible
Also Replace Equipment COST EST. $ 42,000
2. Restroom Door Handles
COST EST. 200.00
3.
COST EST.
4.
COST EST.
5.
COST EST.

NAME(S) OF SURVEYOR(S):

DATE OF SURVEY: 5/6/92

ADA:KPORTLAND3/92

AMERICANS WITH DISABILITIES ACT
TITLE II

INSPECTION REPORT

FACILITY NAME Parkley Park
>50 employees

FACILITY ADDRESS 360 Ogle

NO. OF FLOORS _____ **ELEVATOR: YES NO**

IDENTIFY BARRIERS (provide brief description)

1. Tot lot not Accessible
Also Replace equipment **COST EST.** $30,000

2. _____ **COST EST.** _____

3. _____ **COST EST.** _____

4. _____ **COST EST.** _____

5. _____ **COST EST.** _____

NAME(S) OF SURVEYOR(S):

DATE OF SURVEY: 5/6/92

ADA:KPORTLAND3/92

AMERICANS WITH DISABILITIES ACT
TITLE II

INSPECTION REPORT

FACILITY NAME Lions
>50 employees

FACILITY ADDRESS 570 W. 18th

NO. OF FLOORS _____ **ELEVATOR: YES NO**

IDENTIFY BARRIERS (provide brief description)

1. Grind Lip on Wheel Chair Entrance (2)
COST EST. 150.00

2. Tot lot Not Accessible
COST EST. $5,000

3. Base Ball Restrooms NOT Accessible
COST EST. ?

4. _____
COST EST. _____

5. _____
COST EST. _____

NAME(S) OF SURVEYOR(S):

DATE OF SURVEY: 5/6/92

ADA:KPORTLAND3/92

AMERICANS WITH DISABILITIES ACT
TITLE II

INSPECTION REPORT

FACILITY NAME Jordan Park
>50 employees

FACILITY ADDRESS 2141 Tustin

NO. OF FLOORS _____ **ELEVATOR: YES NO**

IDENTIFY BARRIERS (provide brief description)

1. Tot lot not accessible
Also Replace equipment COST EST. $40,000

2. Drinking fountain not Accessible
COST EST. 500.00

3. _____
COST EST. _____

4. _____
COST EST. _____

5. _____
COST EST. _____

NAME(S) OF SURVEYOR(S):

[signature]

DATE OF SURVEY: 5/5/92

ADA:KPORTLAND3/92

AMERICANS WITH DISABILITIES ACT
TITLE II

INSPECTION REPORT

FACILITY NAME Paulsino Park
>50 employees

FACILITY ADDRESS 1040 Paulsino

NO. OF FLOORS _____ **ELEVATOR: YES NO**

IDENTIFY BARRIERS (provide brief description)

1. Tot lot Not Accessible
Also Replacing Equipment COST EST. $25,000

2. _____
_____ COST EST. _____

3. _____
_____ COST EST. _____

4. _____
_____ COST EST. _____

5. _____
_____ COST EST. _____

NAME(S) OF SURVEYOR(S):
Rob

DATE OF SURVEY: 5/5/92

ADA:KPORTLAND3/92

AMERICANS WITH DISABILITIES ACT
TITLE II

INSPECTION REPORT

FACILITY NAME Tel Winkle Tennis Facility
>50 employees

FACILITY ADDRESS 970 Arlington

NO. OF FLOORS 1 **ELEVATOR: YES NO**

IDENTIFY BARRIERS (provide brief description)

1. Curb Needs Ramp
COST EST. 750.00

2. No Handicap Parking
COST EST. 200.00

3. Restroom Handles (need levers)
Signage (Braille)
COST EST. 250.00

4.
COST EST.

5.
COST EST.

NAME(S) OF SURVEYOR(S):

DATE OF SURVEY: 5/5/92

ADA:KPORTLAND3/92

AMERICANS WITH DISABILITIES ACT
TITLE II

INSPECTION REPORT

FACILITY NAME Del Mar
>50 employees

FACILITY ADDRESS 2080 Manistee

NO. OF FLOORS _____ **ELEVATOR: YES NO**

IDENTIFY BARRIERS (provide brief description)

1. Tot lot not Accessible
Also Replace equipment COST EST. $30,000
2. Restroom Signs, Door handles, Door Pressure
COST EST. 250.00
3. Ramp Lip too High
COST EST. 75.00
4. _____
COST EST. _____
5. _____
COST EST. _____

NAME(S) OF SURVEYOR(S):

DATE OF SURVEY: 5/15/92

ADA:KPORTLAND3/92

AMERICANS WITH DISABILITIES ACT
TITLE II

INSPECTION REPORT

FACILITY NAME Brentwood Park
>50 employees

FACILITY ADDRESS 765 Brentwood

NO. OF FLOORS _____ **ELEVATOR: YES NO**

IDENTIFY BARRIERS (provide brief description)

1. Ramp on Northside has a lip that is too High
COST EST. 100

2. Tot Lot not Accessible
Also Equipment Replacement COST EST. $30,000

3. _____
COST EST. _____

4. _____
COST EST. _____

5. _____
COST EST. _____

NAME(S) OF SURVEYOR(S):

DATE OF SURVEY: 5/5/92

ADA:KPORTLAND3/92

AMERICANS WITH DISABILITIES ACT
TITLE II

INSPECTION REPORT

FACILITY NAME Te Winkle Park
>50 employees

FACILITY ADDRESS 970 Alington

NO. OF FLOORS ____ **ELEVATOR: YES NO**

IDENTIFY BARRIERS (provide brief description)

1. Ramp Lip Too High (2)
COST EST. 100.00

2. Drinking Fountain Not Handicap Accessible (5)
COST EST. 2500.00

3. Restroom Stall inadequate (Grab Bars Sinks etc)
COST EST. 1000.00

4. Tot Lot Not Accessible
COST EST. $5,000

5. Curb in Walk By Restroom Needs to be Depressed
COST EST. 500.00

NAME(S) OF SURVEYOR(S):

[signature]

DATE OF SURVEY: 5/5/92

ADA:KPORTLAND3/92

ATTACHMENT I.4

SELF EVALUATION
FIRE FACILITIES REPORT

COSTA MESA FIRE DEPARTMENT
ADA SELF EVALUATION REPORT

6/12/92

The Costa Mesa Fire Department currently maintains five fire stations with a sixth under construction. Fire Administration is located on the fifth floor of City Hall and Fire Prevention is attached to one of the fire stations at 2803 Royal Palm Drive. Facilities and locations are as follows:

Station 1 2803 Royal Palm Drive.
Fire Prevention 2803 Royal Palm Drive.
Station 2 800 Baker Street.
Station 3 1865 Park Avenue.
Station 4 2300 Placentia Avenue.
Station 5 2450 Vanguard Street.
Station 6 3350 Sakioka Drive (under construction).

Since fire stations are primarily for the use of firefighters and do not provide services necessitating public access, they are not a high priority for compliance with ADA. However, since the public is occasionally invited into fire stations for tours and some fire stations are utilized as voting places, accessibility should be provided upon future tenant improvement.

Accessibility to Fire Administration is necessary and will be provided for in the City Hall section of this document. Access to Fire Prevention, which has a public counter, is necessary and should be a priority. Immediate actions that can be taken at little expense to accomplish this include: (1) designating and striping an existing parking space in front of the building as handicapped parking; (2) removing an iron fence across the walkway, and (3) providing signs indicating that the area is accessible to the handicapped. Enlargement and conversion of one bathroom to accommodate the handicapped should be accomplished in the transition period and is estimated to cost up to $10,000.

One existing fire station, Station 5, is fairly new and meets accessibility requirements. Station 6, when completed, will also be up to current codes. The other four stations all have under-sized bathrooms, which will require construction including moving walls. These modifications should be accomplished in the future if the facilities receive major tenant improvements. The attached inspection reports identify needed improvements for each facility.

AMERICANS WITH DISABILITIES ACT
TITLE II
INSPECTION REPORT

FACILITY NAME: FIRE PREVENTION BUREAU
FACILITY ADDRESS: 2803 ROYAL PALM DRIVE
NUMBER OF FLOORS: 1 **ELEVATOR:** NO

IDENTIFY BARRIERS	COST ESTIMATE
Designate handicapped parking space in front of building adjacent to driveway apron. Provide sign on post.	$300
Enlarge one bathroom and equip for handicapped.	$10,000
Provide miscellaneous access signs.	$200
Provide kickplate on front door.	$200
Remove iron fence across walkway.	$0
	TOTAL: 10.700

NAME OF SURVEYOR: THOMAS R. MACDUFF

DATE OF SURVEY: 5/21/92

AMERICANS WITH DISABILITIES ACT
TITLE II
INSPECTION REPORT

FACILITY NAME: ROYAL PALM FIRE STATION
FACILITY ADDRESS: 2803 ROYAL PALM DRIVE
NUMBER OF FLOORS: 1 **ELEVATOR:** NO

IDENTIFY BARRIERS	COST ESTIMATE
Parking space same as for Fire Prevention	$0
Enlarge one bathroom and equip for handicapped.	$10,000
Provide miscellaneous access signs.	$200
Provide new water fountain.	$500
Provide kickplate on front door	$200
	TOTAL: 10,900

NAME OF SURVEYOR: THOMAS R. MACDUFF

DATE OF SURVEY: 5/21/92

AMERICANS WITH DISABILITIES ACT
TITLE II
INSPECTION REPORT

FACILITY NAME: BAKER STREET FIRE STATION
FACILITY ADDRESS: 800 BAKER STREET
NUMBER OF FLOORS: 1 **ELEVATOR:** NO

IDENTIFY BARRIERS	COST ESTIMATE
Designate handicapped parking space in rear parking lot. Provide sign on post.	$300
Enlarge one bathroom and equip for handicapped.	$10,000
Provide miscellaneous access signs.	$200
Provide new water fountain.	$500
Provide handicapped door hardware (2 doors)..	$300
Provide kickplate on sliding door	$200
	TOTAL: 11,500

NAME OF SURVEYOR: THOMAS R. MACDUFF

DATE OF SURVEY: 5/20/92

AMERICANS WITH DISABILITIES ACT
TITLE II
INSPECTION REPORT

FACILITY NAME: PARK AVENUE FIRE STATION
FACILITY ADDRESS: 1865 PARK AVENUE
NUMBER OF FLOORS: 2 **ELEVATOR:** NO

IDENTIFY BARRIERS	COST ESTIMATE
Designate handicapped parking space in back of building. Provide sign on post.	$300
Enlarge one bathroom and equip for handicapped.	$10,000
Provide miscellaneous access signs.	$200
Provide handicapped door hardware	$150
Provide new water fountain.	$500
	TOTAL: 11,150

NAME OF SURVEYOR: THOMAS R. MACDUFF

DATE OF SURVEY: 6/2/92

AMERICANS WITH DISABILITIES ACT
TITLE II
INSPECTION REPORT

FACILITY NAME: PLACENTIA AVENUE FIRE STATION
FACILITY ADDRESS: 2300 PLACENTIA AVENUE
NUMBER OF FLOORS: 1 **ELEVATOR:** NO

IDENTIFY BARRIERS	COST ESTIMATE
Designate handicapped parking space in rear parking lot. Provide sign on post.	$300
Enlarge two bathrooms (one in training classroom) and equip for handicapped.	$20,000
Provide miscellaneous access signs.	$200
Provide new water fountain.	$500
Provide handicapped door hardware (2 doors)..	$300
Provide kickplate on sliding door	$200
	TOTAL: 21,500

NAME OF SURVEYOR: THOMAS R. MACDUFF

DATE OF SURVEY: 5/22/92

AMERICANS WITH DISABILITIES ACT
TITLE II
INSPECTION REPORT

FACILITY NAME: CIVIC CENTER FIRE STATION
METRO FIRE STATION
FACILITY ADDRESS: 2450 VANGUARD STREET
3350 SAKIOKA DRIVE (NOT COMPLETED)
NUMBER OF FLOORS: 2 **ELEVATOR:** NO

IDENTIFY BARRIERS	COST ESTIMATE
NONE	
	TOTAL: 0

NAME OF SURVEYOR: THOMAS R. MACDUFF

DATE OF SURVEY: 6/2/92

ATTACHMENT I.5

SELF EVALUATION
RECRUITMENT/CURRENT EMPLOYEES
SPECIAL NEEDS REPORT

CITY OF COSTA MESA

Personnel Department

Americans with Disabilities Act (ADA) Compliance

The Personnel Department will be responsible for addressing Title I of the Americans with Disabilities Act (ADA). This section prohibits employment discrimination on the basis of disability.

The Personnel Department will be reviewing the City's policies, practices and procedures related to employment. As necessary, changes will be implemented to ensure that the City is meeting the requirements of the Act.

The following are the major policy areas that the Personnel Department is (or will be) addressing:

- Identification of the Personnel Department ADA Coordinator
- Infectious Illness/Diseases: Protections/Communications
- Accessibility/Reasonable Accommodation Assessments
- Privacy Rights
- Supervisory/Management Training/Employee Awareness
- Self-Identification Processes: Applicants vs. Employees
- ADA Compliance and Response Strategy/Schedule (in conjunction with the City's ADA Task Force)

Disabled individuals shall be treated in the same way as non-disabled individuals in the employment process. Therefore, the Personnel Department has identified that the following practices, procedures and documents will be reviewed (and revised as necessary) for compliance with the Act:

- Job Announcements/Job Advertisements - Determine the standard format to be used (e.g., include an "Essential Functions" section; include a statement regarding accommodations for testing)

- Consideration of Outreach Recruitment Organizations/Efforts - Currently, the City is under an indefinite hiring freeze. Outreach recruitment efforts will be considered after the lifting of the freeze.

- Application/Examination Procedures
  - Employment Applications/Resume Screening
  - Written Tests (including writing projects, multiple choice tests)
  - Oral Interviews/Questions
  - Performance Tests (e.g., typing, shorthand)
  - Physical Tests (e.g., physical agility test for Police Recruit)
  - Reference/Background Checks

- Orientation Procedures and Accessibility

- Class Specifications
- Job Families
- Occupational Groupings
- Career Development Ladders-Advancement Opportunities
- Equal Employment Opportunity Statements
- Mission Statements
- Administrative Policies/Departmental Practices
- Personnel Policies (including job assignments, terminations)
- Employee Handbook
- Bargaining Agreements (i.e., Memoranda of Understanding)
- Job Evaluation System
- Pay Systems/Pay Distributions
- Performance Evaluation Forms/Training Process/Rating Systems
- Benefits Programs
- Disciplinary and Layoff Policies
- EEO/Affirmative Action Plan
- Medical Evaluation System - The City will be contracting with Occu-Med, Inc., to implement a medical evaluation program which is legally defensible. More specifically, this program will be designed to:

    - Ensure that the City is in compliance with the ADA requirements.

    - Ensure that those selected for employment are physically capable of performing the job safely. This includes assisting the City in evaluating reasonable accommodation options for an employee or employment candidate who has a physical condition which limits certain activities of an assigned job class.

    - Reduce future losses to workers' compensation and disability programs by disqualifying applicants whose physical conditions do not meet the job demands.

    - Provide analysis and administrative support for the City's occupational health program.

In addition, the Personnel Department will be participating in a job classification audit project for ADA compliance through a subcommittee of the Employee Relations Committee of the Orange County Division of the League of California Cities. This project will be led by Creative Management Solutions, a human resources consultant firm.

At this time, complete cost estimates associated with reviewing and revising policies, practices and procedures for ADA compliance are not available. However, there are some "known" costs which include:

- Creative Management Solutions (classification audit project) - approximately $2900 for a three-phase project. This will be paid out of "Professional Services".

- Occu-Med, Inc. - The initial "start-up fee" for the program is $5,000 fee; it is a discounted rate based upon the participation of fifteen (15) cities through the Independent Cities Risk Management Authority (ICRMA). It will include an evaluation of the City's current medical evaluation program, development of job profiles for up to fifteen (15) job classes which meet the job analysis requirements of ADA, identification and training of medical providers, and implementation of the program for the medical screening of job candidates and employees. There will be additional charges for: (1) the development of job profiles for ten (10) more job classes - $1000; (2) on-going service/consultation fees - $500 per month. These will be paid out of "Professional Services".

  If a new medical provider is selected in this process, medical examination costs may also increase.

SUMMARY

Creative Management Solutions:	$ 2900
Occu-Med:	
Implementation Fee	$ 5000
Analysis of 10 additional job classes	$ 1000
Ongoing Consultation Fees (16 months @ $500/mo., from 9/92-12/93)	$ 8000
Miscellaneous (e.g., cost increase for medical examinations)	$ 5000
Total (through 12/93)	**$ 21900**

ATTACHMENT I.5

SELF EVALUATION
RECRUITMENT/CURRENT EMPLOYEES
SPECIAL NEEDS REPORT

ATTACHMENT I.6

SELF EVALUATION
COMMUNICATIONS REPORT

CITY OF COSTA MESA

INTER OFFICE MEMORANDUM

July 2, 1992

TO: Tony C'De Baca

FROM: Tom Warnack

RE: Provisions For Dealing With The Hearing Impaired

Pursuant to your request, I have spoken to Sgt. Yezbick regarding the manner in which we currently deal with a hearing impaired prisoner.

He advises we have a customary practice of allowing the hearing impaired prisoner to write out (in note form) the information that is to be relayed via telephone. The jailer then reads this information verbatim to the party which the prisoner has called. The jailer continues to act as a translator for both parties until the conversation is completed.

Until such time as the City installs TDD facilities within the jail, this practice may continue, as it has proven to be an effective way to meet the needs of the hearing impaired prisoner.

MEMORANDUM

Communications Department

To: ADA Task Force Members
From: Jerry Verwolf JV
Date: June 15, 1992
Subject: ADA Compliance

There are various sections in the ADA regulations that reference communications processes. These areas will be addressed below.

ADA regulations require direct access for the hearing/speech impaired community to emergency services. This essentially prohibits the use of a seven-digit number that these individuals would call for emergencies. The State of California contracts with a translation service called Eden I & R in Hayward. This translation service provides assistance in translating foregin language calls and TDD calls. The numbers are programmed separately into the 9-1-1 equipment so it is a simple process of adding on the translation service for these types of calls. An inquiry to Robert Mather, legal counsel for ADA resulted in a decision that the translation service contracted by the State of California would be in compliance with ADA regulations. The City of Costa Mesa is installing a new 9-1-1 system that has TDD equipment built in the controller. This will allow Public Safety Dispatchers for Costa Mesa to communicate with hearing/speech impaired callers directly via this equipment. The State contracted translation services would provide a back up to this new equipment.

The Civil Rights Division, Coordination and Review Section, was contacted with regards to access for the hearing/speech impaired individuals who have inquiries into city related business. Under Title 2, Section 35.105, we are not required to provided TDD capability for incoming calls. This is primarily due to the Relay Service available in California. (See attached brochure.) It does require that TDD devices be available for individuals who will make outgoing calls, i.e. someone who has been arrested and will be making a phone call. In areas where the city has provided access to pay telephones, shelves and electrical outlets must be available for hearing/speech impaired callers to utilize these phones with their own TDD equipment. As an alternative to having numerous TDDs in the city it is suggested that at least two be available, one in the jail and one in the City Clerk's Office. A point to keep in mind is the training for TDD use. We are addressing this issue in the 9-1-1 Center and would be available to assist other city departments in training.

It was also indicated by Anita Frelich, U.S. Department of Justice, that we are required to have participation from the hearing/speech impaired community during the self-evaluation mandated under ADA.

Another area that needed to be addressed was city owned elevators. That ADA regulations require communications in the elevators that do not require voice communications. A procedure is being established for handling elevator calls where no voice communications is used.

Relay Service Makes All the Right Connections

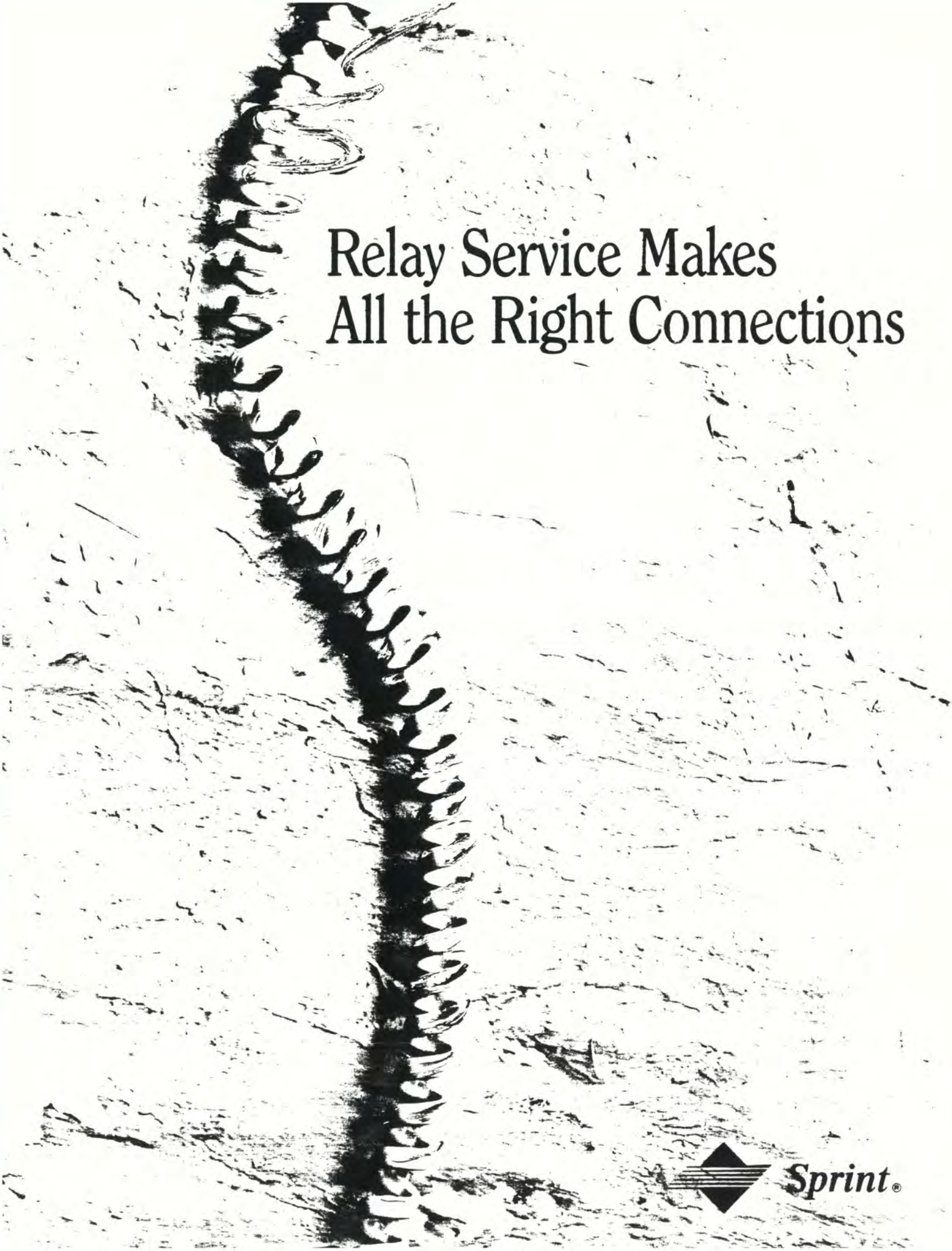

Sprint®

f rnia Relay Service

California Relay Service Billing Procedures

- There is no charge for using the relay service within your local calling area.
- Long distance calls made through California Relay Service will be billed at a reduced rate. This discount is given to compensate for the additional time needed to place a relay call.
- Direct dial, collect calls, third-party calls, credit cards and calling cards are welcome through the relay service. Simply identify your billing method.

Computer Call Processing

Computer users may access California Relay Service by dialing 1 800 735 2929. Set your communications software to follow this protocol at speeds ranging from 300 to 2400:
a. 8 bit b. No Parity c. 1 Stop Bit d. Full Duplex

When calling at a rate of 300 or below, follow the above settings using Half Duplex. *(Note: It may be helpful to set your "time out" to 60 seconds.)*

State-to-State Calling

California Relay Service lets you make calls to and receive calls from anywhere in the United States. Callers making calls from outside California will be billed an operator surcharge.

Sample Calling Patterns and Dialogues

TT Users

Call 1 800 735 2929

CRS Agent: HI CRS, AGENT #1 GA
Caller: HELLO PLS CALL 916 222 2222 GA
CRS Agent: THANK U PLS HD..I AM DIALING NOW. RING 1..2..3..(PHONE ANSWERED) (FEMALE VOICE) HELLO! GA
Caller: HI! I WOULD LIKE TO SPEAK WITH JOHN SMITH. GA

Calling Tips

Please have the phone number ready. When the CRS Agent answers, give him or her the area code and number you would like to call. Feel free to use American Sign Language. Type your call on the TT to the voice user as if the CRS Agent was absent. The CRS Agent will relay everything that is typed. Please do not add comments to the CRS Agent during your conversation, because these phrases will be relayed as well. When you leave a message, you may also want to indicate that you have called through California Relay Service.

Voice Users

Call 1 800 735 2922

CRS Agent: CRS, Agent #1, Go Ahead.
Caller: Hello. Would you please call John Smith at 916 222 2222? Go Ahead.
CRS Agent: Please hold while I connect your call . . .
Hi, John Smith here. Go Ahead.
Caller: Hi John, this is Sarah . . .

Calling Tips

Please have the phone number ready. When the CRS Agent answers, give him or her the area code and number you would like to call. Speak in a slow and clear manner. Speak to the TT user as if the CRS Agent was absent. The CRS Agent will then relay all of your message, word-for-word. Please do not add comments to the CRS Agent during your conversation, because these phrases will be relayed as well. When you leave a message, you may also want to indicate that you have called through California Relay Service.

ATTACHMENT I .7

SELF EVALUATION
ADA FUNDING REPORT

C I T Y O F C O S T A M E S A

HOUSING AND COMMUNITY DEVELOPMENT
INTER OFFICE MEMORANDUM

TO : **TONY C'DE BACA**
Assistant Development Services Director/Building

FROM: **BARBARA SURGES**
Administrative Assistant BLS

DATE: **JUNE 12, 1992**

REF : **ADA - FUNDING**

Funding for the removal of architectural barriers which restrict the mobility and accessibility of elderly and handicapped persons is available from the 1991-92 Community Development Block Grant (CDBG) allocation in the amount of $50,000.

Also, when Costa Mesa's application for 1992-93 CDBG funding is approved (usually in July), another $50,000 will be available.

Costa Mesa's City Council annually determines which projects it will allocate for CDBG funding. Consequently, staff is unable, at this time, to determine if any potential future CDBG funding may be allocated for the removal of architectural barriers in order to comply with the Americans with Disabilities Act.

BLS:mt

ADA

ATTACHMENT II

FOLLOW UP INSPECTIONS
BY
CHIEF BUILDING INSPECTOR

A FOLLOW-UP INSPECTION TO THE SELF-EVALUATION INSPECTIONS FOR COMPLIANCE WITH ADA REQUIREMENTS WAS PERFORMED BY THE BUILDING DIVISION. THE FOLLOWING IS A SUMMARY OF THAT INSPECTION FOR:

CITY CORPORATION YARD AND FACILITIES
2300 PLACENTIA AVENUE

INSPECTION FINDINGS

1. The parking spaces at the "new" Corp Yard are in compliance with Title 24 State requirements, but do not meet ADA requirements which requires the access area or commonly the "unloading" 5' portion of the space to be level, to a path of travel. Also ADA requires a 1-in-10 side slope of ramps compared to 1-in-8 in the Title 24 requirements. There is a lip at the curb cut ramps at the public sidewalk which exceeds the ½" allowance by ADA. The interior handicap facilities appear to be in compliance with ADA requirements.

   The "old" Corp Yard offers no designated handicap parking. The site is relatively flat, no impediments to path of travel. The men's rest room is furnished with (2) urinals, both at 24" in height and 1 toilet stall which is handicap accessible as are the other rest room accessories.

RECOMMENDATION

1. Redesign the parking at the "new" Corp Yard to comply with ADA requirements.

2. Grind the curb lips to comply with ½" maximum differential at the entrance drive and public sidewalk.

3. Provide handicap parking at the "old" Corp Yard near a primary entrance to comply with ADA requirements.

4. Lower (1) urinal in men's rest room to 17" to the lip. (Due to physical differences, only the men's facilities were inspected during these inspections. There may be discrepancies in the women's facilities unknown at this time)

Approximate cost - $3,500.00

Victor Clift
Chief Building Inspector
(BUILDING\2300PLAC.NTA) C-12

A FOLLOW-UP INSPECTION TO THE SELF-EVALUATION INSPECTIONS FOR COMPLIANCE WITH ADA REQUIREMENTS WAS PERFORMED BY THE BUILDING DIVISION. THE FOLLOWING IS A SUMMARY OF THAT INSPECTION FOR:

CITY HALL - 77 FAIR DRIVE

INSPECTION FINDINGS

The handicap parking at the front of the building is incorrect. There is no curb cut or access to a sidewalk and the spaces are striped improperly (unloading on the wrong side, one [1] space not property striped, [cross hatched] in contrasting color [Blue]).

The handicap parking (wheelchair access) in the rear of the building is also incorrect as it has no unloading space.

The 1st floor rest rooms are totally inaccessible as the door opening is only 27½". The minimum requirement is 32" clear with the door in a 90° configuration. There is no undercounter clearance, the bottom of the vanities is 18" above the floor where 29" is required by ADA. The toilet room accessories are also positioned at the wrong heights - mirrors at 52½ (40" required), the towel dispenser at 60" (40" required).

The handicap toilet stall is too small as there is only 32" in front of the toilet where 48" is required. Grab bars are positioned wrong (no rear). The privacy wall at the entrance to the rest room only provides 35" clearance, 36" required.

The fifth floor men's room is the same configuration as the first floor.

RECOMMENDATION

1. The 1st and 5th floor rest rooms will need to be completely remodeled to comply with ADA requirements

2. The parking spaces need restriping in the proper configuration

3. Curb cuts installed in the proper location to compliment the corrected parking configuration. (all plans for construction should be submitted to the Building Division for preliminary approval)

Approximate Cost - $12,000-15,000

Victor Clift
Chief Building Inspector

A FOLLOW-UP INSPECTION TO THE SELF-EVALUATION INSPECTIONS FOR COMPLIANCE WITH ADA REQUIREMENTS WAS PERFORMED BY THE BUILDING DIVISION. THE FOLLOWING IS A SUMMARY OF THAT INSPECTION.

POLICE SUBSTATION - 567 18TH STREET, COSTA MESA

There are two handicap parking spaces in the front lot at 18th and Park Place. Both are improper as to layout and signage.

There are no designated handicap spaces in the rear parking lot and no path of travel to the primary entrance from the rear lot. Path of travel from the front lot to the building entrance is acceptable.

The rest rooms in this facility are not accessible. The entire room is 4'10" wide by 8' long. The door only provides 29" clear entry. The toilet stall is 32" by 58" - unusable by wheelchair users.

RECOMMENDATIONS:

1. Complete remodel of rest rooms would be required to meet ADA requirements.

2. Restrip the parking lot in the proper configuration and slope 2% in any direction.

   Approximate cost - $8,000

VICTOR CLIFT
Chief Building Inspector
June 19, 1992

VC:es(PDsubsta.tion)C12

A FOLLOW-UP INSPECTION TO THE SELF-EVALUATION INSPECTIONS FOR COMPLIANCE WITH ADA REQUIREMENTS WAS PERFORMED BY THE BUILDING DIVISION. THE FOLLOWING IS A SUMMARY OF THAT INSPECTION (NEW CONSTRUCTION).

SENIOR CENTER - POMONA STREET AT 19TH STREET

The handicap parking at the entry is incorrect. As to configuration, slope and path of travel. ADA requires the passenger unloading area to be level within 2%.

The curbs and ramps do not meet this requirement and infringe on the path of travel. the stairway at the patio area does not provide path of travel to the entry. There are door stops installed on required kick plates and several handrails are incorrect. The rest rooms at this facility comply with current requirements.

RECOMMENDATIONS:

1. Reconstruct the handicap parking area to comply with ADA requirements.

2. Reconstruct or modify the path of travel at the stairway in the patio area where stairs were built in place of a ramp.

   Approximate cost - $6,000

VICTOR CLIFT
Chief Building Inspector
June 19, 1992

A FOLLOW-UP INSPECTION TO THE SELF-EVALUATION INSPECTIONS FOR COMPLIANCE WITH ADA REQUIREMENTS WAS PERFORMED BY THE BUILDING DIVISION. THE FOLLOWING IS A SUMMARY OF THAT INSPECTION.

NEIGHBORHOOD COMMUNITY CENTER - 1845 PALM AVENUE

There are two parking spaces in the front parking area that ar bother incorrect. As to layout (no unloading), the path of travel to the front entrance is impeded by the placement of a 3" pipe column in the exact center of the curb ramp.

The rest room configuration is incorrect. The handicap stall is too small . Does not have the proper side clearance, under counter space is less than the 29" requires. No lever hardware on lavatories. No strike side clearance on doors - 18" required, 4" existing.

The parking space at the downtown center at Anaheim and Center Street is incorrect. There is no unloading area. Curb lips exceed the ½" maximum.

RECOMMENDATIONS:

1. Major remodel of the rest rooms would be required to meet ADA requirements.

2. Reconfiguration of the handicap parking spaces to meet ADA requirements including the curb lips in excess of ½".

   Approximate cost - $12,000 - 15,000

VICTOR CLIFT
Chief Building Inspector

VC:es(communit.ctr) 1

A FOLLOW-UP INSPECTION TO THE SELF-EVALUATION INSPECTIONS FOR COMPLIANCE WITH ADA REQUIREMENTS WAS PERFORMED BY THE BUILDING DIVISION. THE FOLLOWING IS A SUMMARY OF THAT INSPECTION.

POLICE STATION - 99 FAIR DRIVE, COSTA MESA

Handicap parking at the front is incorrect (improperly striped). The path of travel from the parking location to the primary entrance is adequate but the walk at the entry door is low causing a 2" difference at the threshold where ½" is required. The rest rooms are not accessible as a 2'6" door is provided allowing only 29" clear, where 32" is required. Typically, these rest rooms are the same configuration as City Hall and have the same problems of clear space at lavatories - 29" clear required, 18" provided. Lever hardware required, size of the toilet stalls only provide 32" in front of the toilet where 48" is required. Strike side clearance at the doors is incorrect - 18" required, 4" provided.

RECOMMENDATIONS:

1. Complete remodel of rest rooms required to comply with ADA requirements.
2. Reconfiguration of the handicap parking with corrections as to layout.
3. Correct the path of travel at the entry to the building (2" barrier) ½" required (threshold maximum height).

VICTOR CLIFT
Chief Building Inspector
June 19, 1992

VC(police.ada)C12

July 17, 1992

Victor Clift
Chief Building Inspector

RE: <u>REA COMMUNITY CENTER</u>

Follow up inspections to the Self Evaluation inspections were performed by the Building Division. The results of those inspections are as follows:

The handicap parking is incorrect (no unloading area) with limited path of travel to entry. The administrative offices are not accessible, because there are steps at all entrances. There is adequate path of travel throughout the common areas of the center and also from the public way.

There are three handicap parking spaces in the rear parking lot which are also incorrect. Regarding configuration, there is ramp access provided from this parking lot to the common areas of the center which are incorrect as to required width, but still usable. There is also a ramp provided to a rear entrance of the main auditorium which is very steep and is not in compliance (narrow landings, no handrails). The restrooms at the center do not comply. Major remodeling is required.

(HANDICAP.ASS)C12

July 17, 1992

Victor Clift
Chief Building Inspector

RE: <u>COSTA MESA CITY GOLF COURSE CLUB HOUSE</u>

Follow up inspections to the Self Evaluation inspections were performed by the Building Division. The results of those inspections are as follows:

The handicap parking is configured incorrectly. There is no path of travel to the main entry. There is a curb cut ramp, but it is impeded by stairs to the main entry. There is a ramp which leads one to an exterior elevator that goes to the second floor, and is accessible, but once on the second floor, there is no way down except by the elevator which leads one back outside where there is no path to the entrance.

The second floor rest rooms are fully accessible. Lever type hardware is missing from other second floor rooms. However, a path of travel is provided. The first floor is not accessible from the main entry - monument stairs block the path of travel. Locker room bathrooms are accessible only from the outside rear entry at the course level. The golf cart area is accessible. A major remodel is needed to bring this facility into compliance.

(HANDICAP.ASS)C12

July 17, 1992

Victor Clift
Chief Building Inspector

RE: <u>CITY PARK INSPECTIONS</u>

Follow up inspections to the Self Evaluation inspections were performed by the Building Division. The results of those inspections are as follows:

1. <u>TEWINKLE PARK TENNIS COURTS</u>

   There is no handicap parking space in the tennis court parking lot, no public sidewalk, and no curb cut out in the parking lot. There is a path of travel via sidewalk from Presidio Drive, but no access from Arlington Drive.

   The parking lot on the park side of Arlington Drive has two handicap parking spaces, both incorrectly designed and no path of travel to the park. There is a curb cut at the entrance to the park from Junipero Drive, which is also incorrectly designed (curb lip exceeds ½" maximum). There is no public sidewalk on either side of Junipero approaching the park. There are two parking spaces at the Presidio Drive south parking lot which are inaccessible because steel poles have been placed in the curb ramp.

   The park rest rooms are accessible from a remote path of travel (the Presidio Drive south parking lot), but are not handicap equipped (no grab bars).

   The tot lot is not accessible as are other areas of the park because the path of travel exceeds the 2% slope requirement.

   Generally speaking, the park requires major modification to meet the required code.

2. <u>CANYON PARK</u>

   The upper parking lot is configured incorrectly with the unloading area on the wrong side of the handicap space. The space exceeds the 2% slope requirement and lips at all curb rounds exceed the ½" requirement. The tot lot is not accessible (path of travel incorrect). The lower park is not accessible from the designated parking spaces which are also incorrect. There are no curb cuts from the parking lot to the park areas, thus rendering them inaccessible. There are no handicap rest room facilities available and there are no walkways throughout the park. Major modifications are required in this park.

3. WILSON PARK

   The entire park is inaccessible. There are no sidewalks from the public way.

4. FAIRVIEW PARK

   There is one handicap accessible parking space which complies with code and there is one table accessible from that space. No rest rooms are available and there is no path of travel to the rest of the park areas.

5. ESTANCIA PARK

   This park is inaccessible from the public way. There is a ramp from the sidewalk on Placentia Avenue but it is too steep to meet the 2% slope requirements in any direction. Handicap parking is incorrect and the rest rooms are not in compliance (no grab bar, no lever hardware, toilet height incorrect). There is a path of travel within the park area itself but there is no path to the park from the public way.

6. BALEARIC PARK

   Rest rooms are inaccessible (doors are too small). There is no path of travel from the public way.

7. OGLE PARK

   The park is inaccessible. There is no path of travel from the public way.

8. HELLER PARK 257 16th Street

   The park is accessible. There is a path of travel throughout the park. The rest rooms are not accessible (door clearance inadequate, no grab bars, etc.).

9. JORDAN PARK

   There are no rest room facilities provided. There is a path of travel through some areas. Tables are not provided.

10. GISLER PARK

    The handicap parking provided is incorrect (no unloading area). There are no rest rooms. The park is accessible with a path of travel provided and there are walkways throughout the park.

11. PAULARINO PARK

    The park is accessible. There is a path of travel. The rest rooms are inaccessible due to inadequate door clearance, improper hardware, grab bars, etc.

12. SHIFFER PARK

    The handicap parking is incorrect (no unloading area). The rest rooms are inaccessible (door clearance is inadequate). The park is accessible with walkways throughout.

SUMMARY

It is apparent that most parks were constructed quite sometime ago. Most parks have some areas that are accessible to the impaired, while the majority of facilities are inaccessible. Portable handicap toilets are available and could be used to comply with ADA requirements. The major problem with most of our parks is the lack of or inadequate handicap parking provision and the lack of paths of travel throughout the park areas. The park areas are of concern because the majority of our parks do not have walks within park areas. My recommendation would be to address the issues of parking and paths of travel first. Use portable handicap rest rooms to accommodate the impaired until such time funds are once again available to construct permanent rest rooms. Each and every park was not inspected due to time constraints but all parks seem to have similar deficiencies.

ATTACHMENT III

INFORMATION PROVIDED TO SURVEYORS

Figure 531-A
Justice Department Examples of Steps To Remove Barriers*

CONDITION	APPROACHES
MOBILITY IMPAIRMENTS	• Install ramps • Make curb cuts in sidewalks and entrances • Reposition shelves • Rearrange tables, chairs, vending machines, display racks and other furniture • Reposition telephones • Widen doors • Install offset hinges to widen doorways • Eliminate a turnstile or provide an alternative accessible path • Intall grab bars in toilet stalls • Rearrange toilet partitions to increase maneuvering space • Insulate lavoratory pipes under sinks to prevent burns • Install a raised toilet seat • Install a full-length bathroom mirror • Reposition the paper towel dispenser • Create designated accessible parking spaces • Install a paper cup dispenser at a water fountain • Remove high pile, low density carpeting • Install vehicle hand controls
VISUAL IMPAIRMENTS	• Add raised marking on elevator control buttons
HEARING IMPAIRMENTS	• Install flashing light alarms

*These examples are incuded in §36.304(b) of DOJ's title III regulations.

Figure 531-B
Examples of Non-Structural Ways to Make Goods and Services Accessible*

CONDITION	APPROACHES
VISUAL IMPAIRMENTS	• Use large-letter signs • Remove displays or other objects in path of travel • Use "talking" calculators (or computers) • Raise low-hanging signs or lights • Increase frequency of existing oral announcements • Make optical magnifiers available • Install entrance indicators such as strips of textured material near doorways, elevators, etc. • Tape texts/menus • Have servers or sales clerks read menus or price tags
HEARING IMPAIRMENTS	• Provide written notice of oral announcements • Train employees in basic sign language • Provide small sound amplifiers for telephones • Purchase telecommunication devices for the deaf (cost can be $75 and up) • Rearrange work stations toward co-workers • Provide paper and pencils at sales counters • Improve sight lines by replacing oval tables with round tables
MENTAL/COGNITIVE IMPAIRMENTS	• Use large-letter signs • Use simple words or illustrations on signs • Color-code materials • Replace written job testing with on-the-job tryouts or verbal exams

*These may involve some minor alterations to a structure.

Figure 531-B (Continued)
Examples of Non-Structural Ways to Make Food and Services Accessible

CONDITION	APPROACHES
TACTILE/READING IMPAIRMENTS	• Use "Lazy Susans," which allow people to rotate equipment without reaching • Buy automatic electric staplers • Attach items or equipment with velcro

What the "readily achievable" standard means for any particular public accommodation depends on all the circumstances. The rules provide no numerical formula or cost threshold to distinguish between what is and is not readily achievable. Instead, such decisions must be made on a case-by-case basis.

For example, a small facility might have to place a ramp over one or two steps, add a grab bar, or install a paper cup dispenser to make a water fountain more accessible, but might not be required to make major modifications such as long ramps or completely remodeled rest rooms, if those changes could not be easily accomplished without much expense.

This requirement is deliberately designed to be flexible, depending on the size of the business. What can be easily accomplished by a large business might be impossible or tremendously costly for a small one. The ADA explicitly mandates that the size and the nature of the business be taken into account in determining what is readily achievable. Figure 531-A, taken from §36.304(b) of the title III rules, is a partial list of barrier removals that can be considered readily achievable (Figure 531-B provides other examples not included in the DOJ rules).

The ADA refines the concept of readily achievable to explicitly take into account the resources of a small, local facility (i.e. site-specific factors), as well as the resources of any parent company, and includes a provision that courts must consider the effect on the "expenses and resources" of the operation of a local facility in determining whether an action is readily achievable (§301(9)(b) of the act; H.Rpt. 101-485, Part 2, p. 109).

AMERICANS WITH DISABILITIES ACT
TITLE II

COMPLIANCE SURVEY

INSTRUCTIONS

Each compliance inspector must view each public building with an attitude of accessibility. This implies that the inspector should consider themselves to be disabled at the time of the inspection and follow the path of travel, from the parking space to the point of services.

STEP 1 -

Begin with the parking available. Is it readily available and are signs posted in the usual manner for disabled spaces ? The most common specifications are listed:

1. Check for signage at entry into parking lot and at the dedicated space.

2. Check for wheel stops to prevent encroachment onto walkways by parked vehicles.

3. The space must also be oriented so a disabled person does not have to travel behind a parked vehicle to get to the front entry.

4. The parking space is to be 14 feet wide overall. 9 feet wide parking space and a 5 foot loading and unloading access aisle. The space is to be outlined in blue.

STEP 2 -

Now as you leave your vehicle and make your way to the front entrance. Look for barriers.

1. Is the grade level from the parking to the door?

2. Is there a curb between the parking and the entry? A curb is an obvious barrier.

3. Is there a ramp from the parking space which leads to the primary entrance. Does it exceed a 1:12 slope?

4. The minimum width of the ramp is to be 36". If occupancy exceeds 50 the minimum width is 48".

5. Are there stairs which create a barrier for access to the primary entry?

STEP 3 -

All primary entrances must be accessible. Check the following for entrance door compliance:

1. Doorways to have a minimum clearance of 32" in the fully opened position.
   The threshold not to exceed 1/2", beveled, in height above the floor level.

2. The pressure for opening the door must not be more than 8 1/2 pounds and the hardware must be of a lever type not exceeding 30" - 44" in height from the finished floor.

3. A 10" kickplate is required if the bottom 10" of the door is not smooth for entry to be achieved by use of wheelchair.
4. Is the door signed with a disabled logo for accessibility?

STEP 4 -

Does the path of travel meet compliance requirements?

1. After entering the building take notice of the entry itself as to the aisle width. Do the aisles meet the required clearance of 36"? If there is material or equipment on both sides of the aisle the minimum clearance for the aisle is 42".
2. Check to see if there are any protruding objects within 27" - 80" off the finished floor, if that is the case they must not encroach in the path of travel over 4".

3. Are there any stairs along the path of travel? Do they have handrails at 34" in height? Are they slip resistant? Do they have closed risers and a contrasting strip on the bottom and the top riser?

4. Have you checked for drinking fountains and telephones along the path of travel?
   They are to be made accessible which would include being 48" off the floor in height for a front approach and 54" in height off the floor for a side approach.

STEP 5 -

Where are the restrooms along the path of travel? Are all the requirements met for compliance?

1. Does the door leading to the bathrooms maintain a pressure not exceeding 5 pounds?

2. Check with your measuring tape and see if the door opening is a minimum of 32". The handle must be of the lever type.

3. Once inside is there a clearance of 60" deep circle in the floor space in the direction of door swing to provide for wheelchair manuvering?

4. Is there identification on the bathroom doors do they meet the required codes for accessibility facilities? (Signage will be addressed later in the text.)

5. A water closet inside the compartment must have minimum of 28" clear space from the water closet or at least 32" clear space from a wall at one side of the water closet. The other side of the water closet must provide 18" from the centerline of the water closet to the wall. Also inside the compartment if the door is at the end a clearance of 48" must be maintained in front of the water closet.

6. The compartment door is to have an automatic closing device. The locking device must also be the flip over type or sliding to avoid the user from having to twist or grasp.

7. Are there grab bars located at the water closet? If so, do they comply? Are they located at one side and also behind the water closet? Are they securely attached to the wall? Are they 33" above and parallel to the floor? If the flushing device prevents the grab bar from meeting the 33" then 36" may be acceptable. The grab bars must be at least 42" long along the side, and 36" long for the grab bar along the back wall.

8. Are the lavatories accessible? Does at least one meet the requirements by being a maximum of 29" off the finished floor? Is there clear floor space in front of the lav of at least 30" by 48" for front approach? Lavatory faucets must be lever type.

9. Check to make sure the mirrors and all facilities, such as towel dispensers,sanitary seat covers and other hygienics are no more than 40" from the floor in height.

10. Toilet tissue dispensers are to be located on the wall within 12" of the front edge of the toilet seat.

11. Urinals if provided shall have a clear floor space 30" by 48" in front of the urinal to allow for forward approach.

STEP 6 -

Do the signs at this facility meet the required specifications? Whenever permanent signs are required they must comply with the following criteria:

PARKING

A sign is to be provided at the entrance(s) of parking lots at a height of 80", advising the public that there are parking spaces provided for the disabled. At the parking space check to see if there is a 3' by 3' blue square with the international symbol in white at the foot of the parking space and a post sign at the head of the space.

ENTRY

Posted signage is required at the front entrance alerting persons with disabilities that there are facilities within this building that meet accessibility requirements.

SERVICES

Signs are to be installed to inform the public with disabilities that within this building services will be provided upon request.

RESTROOMS

1. The international symbol of accessibility, which consists of a profile of a wheelchair in white on a blue background, is the standard symbol used to identify an accessible facility.

2. Characters on the sign must be a minimum of 3" in height. They also must contrast with their background, blue letter on white background or white letter on a blue background.

3. The signs also are to be Grade 2 Braille, which is at least 5/8" high.

4. Check to make sure the signs are at a height of 60" from the centerline of the sign to the floor and at a location where a person may approach within 3" without encountering any protruding objects or standing within a doorswing.

5. The signage on restrooms should be placed on the restroom door itself. Other signs should be placed on the adjacent wall outside the door leading to the room or space they describe.

STEP 7 -

Are the public services accessible? Such as the programs conducted in City facilities.

1. At City facilities, citizens with disabilities must be provided with information about the location of accessible services, activities, programs and facilities.

2. Public counters may need to be accessible. Determine if services at the public counter can be provided by reasonable means. If not, the counter may need to be altered to provide access.

In general, public services must be offered in the most integrated setting possible, and be equal to and as effective as those provided to non-disabled persons.

Since most sites will have questionable assessibility patterns it is advised to contact Kathi Portland to make a final determination in the matter.

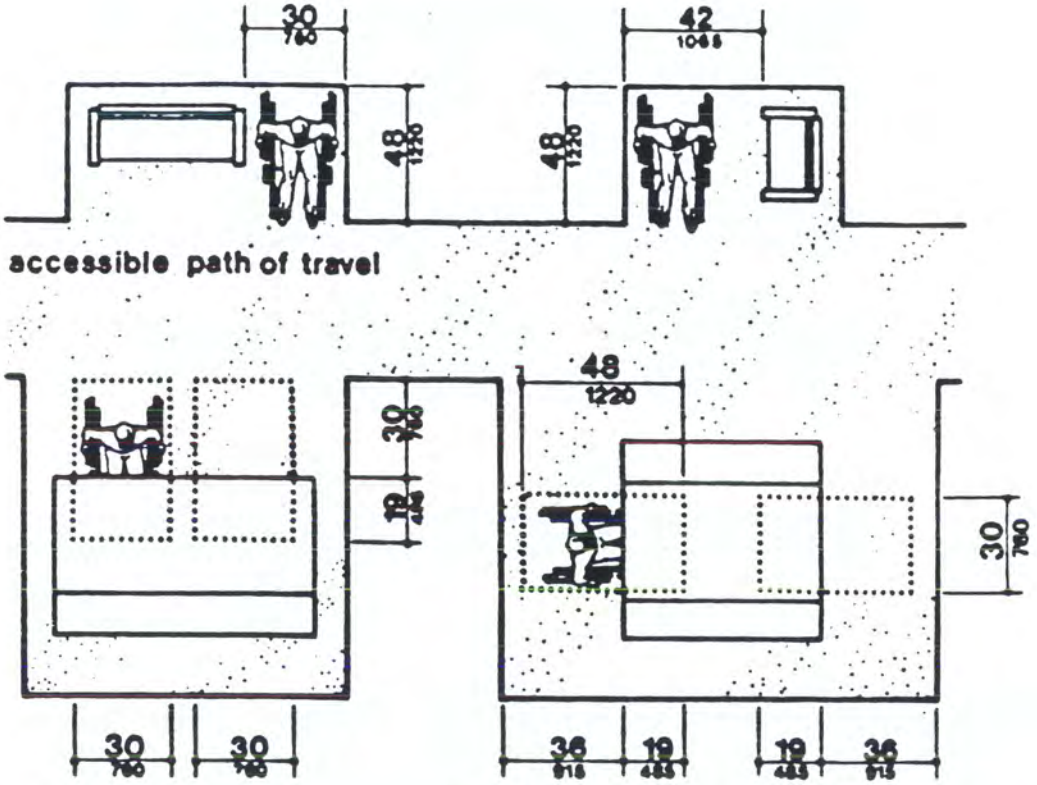

Fig. 45
Minimum Clearances for Seating and Tables

BUILDING

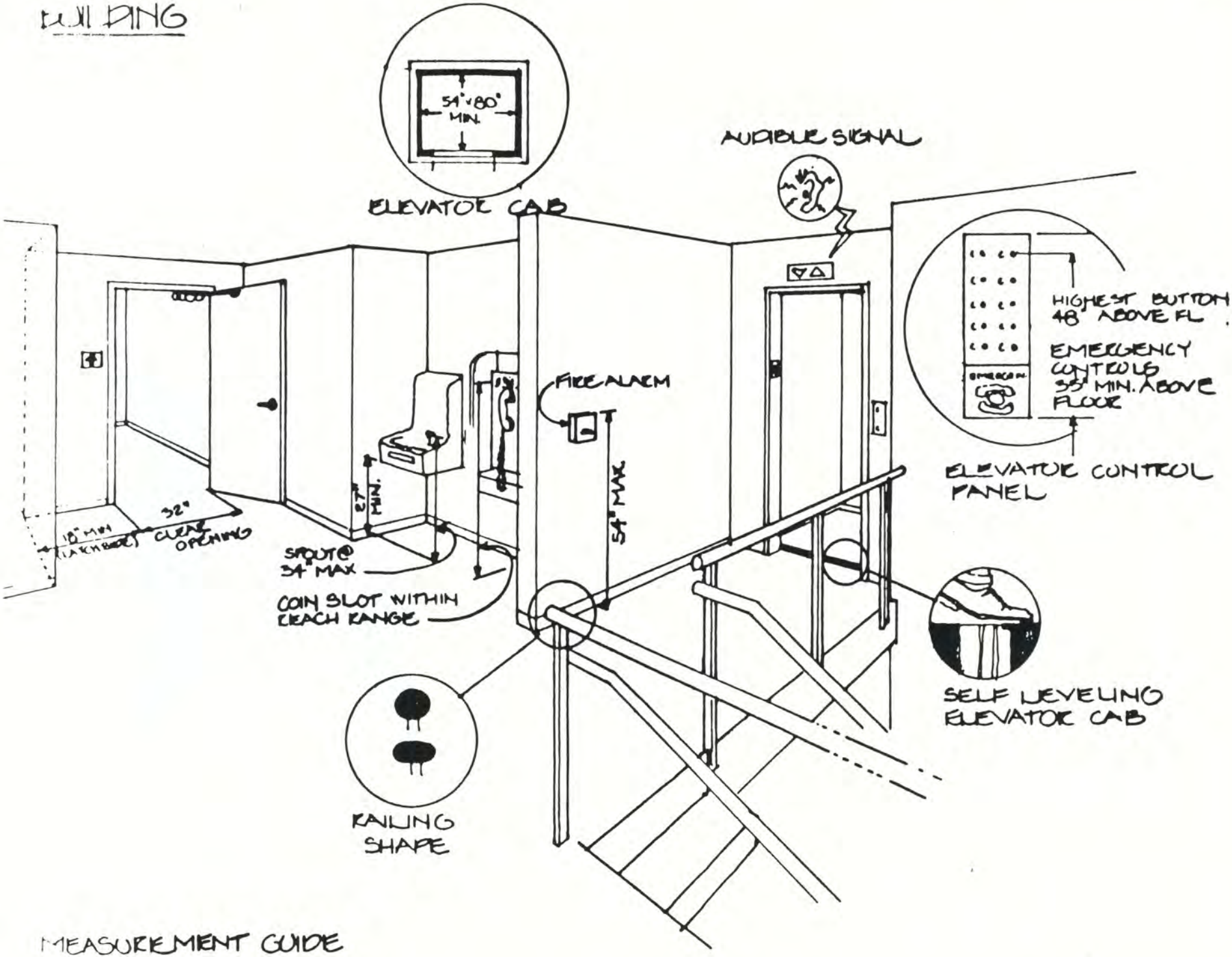

MEASUREMENT GUIDE

BATHROOM

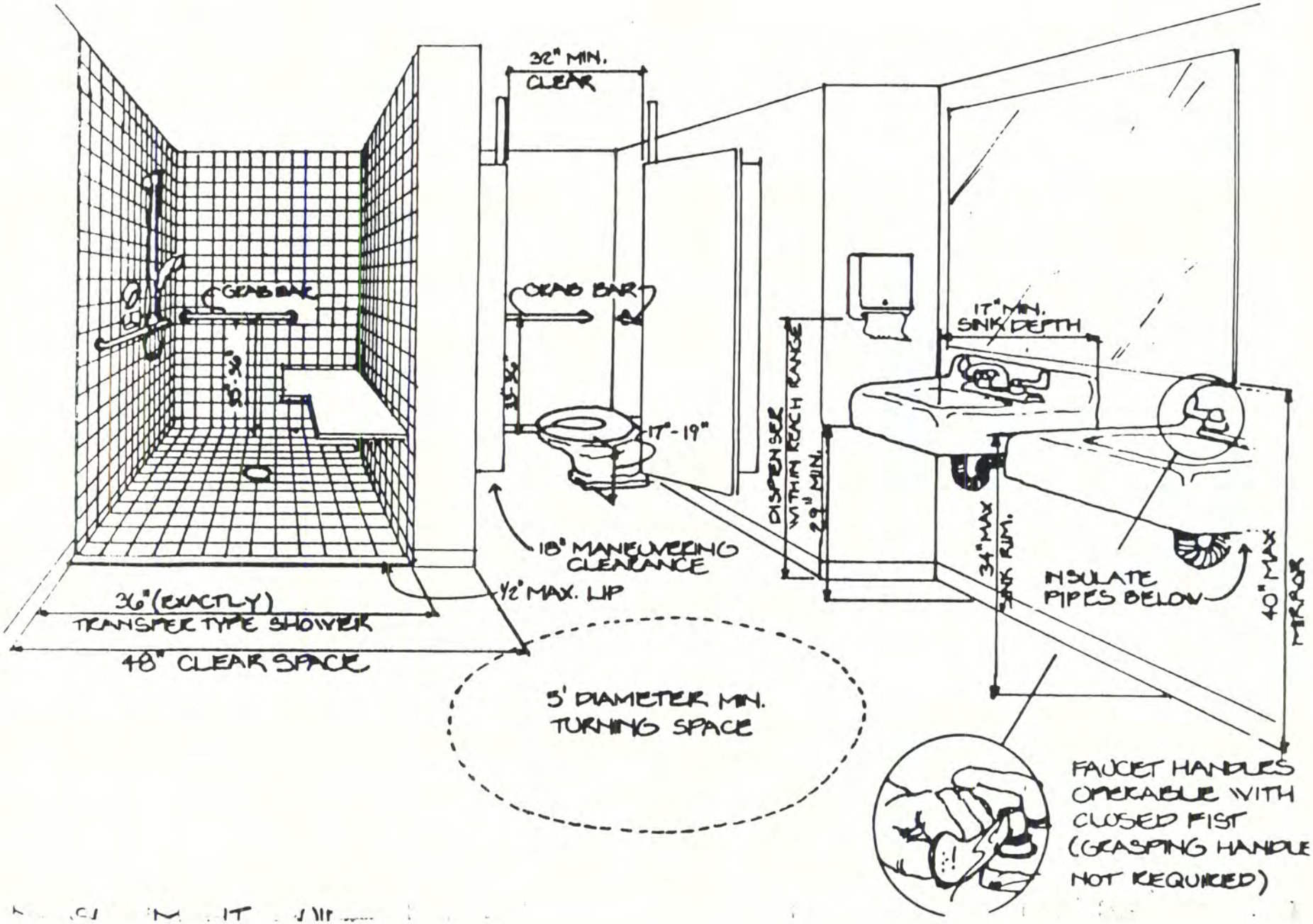
32" MIN. CLEAR
GRAB BAR
GRAB BAR
33"-36"
17"-19"
18" MANEUVERING CLEARANCE
1/2" MAX. LIP
36" (EXACTLY) TRANSFER TYPE SHOWER
48" CLEAR SPACE
5' DIAMETER MIN. TURNING SPACE
DISPENSER WITHIN REACH RANGE
29" MIN.
17" MIN. SINK DEPTH
34" MAX SINK RIM.
INSULATE PIPES BELOW
40" MAX MIRROR
FAUCET HANDLES OPERABLE WITH CLOSED FIST (GRASPING HANDLE NOT REQUIRED)

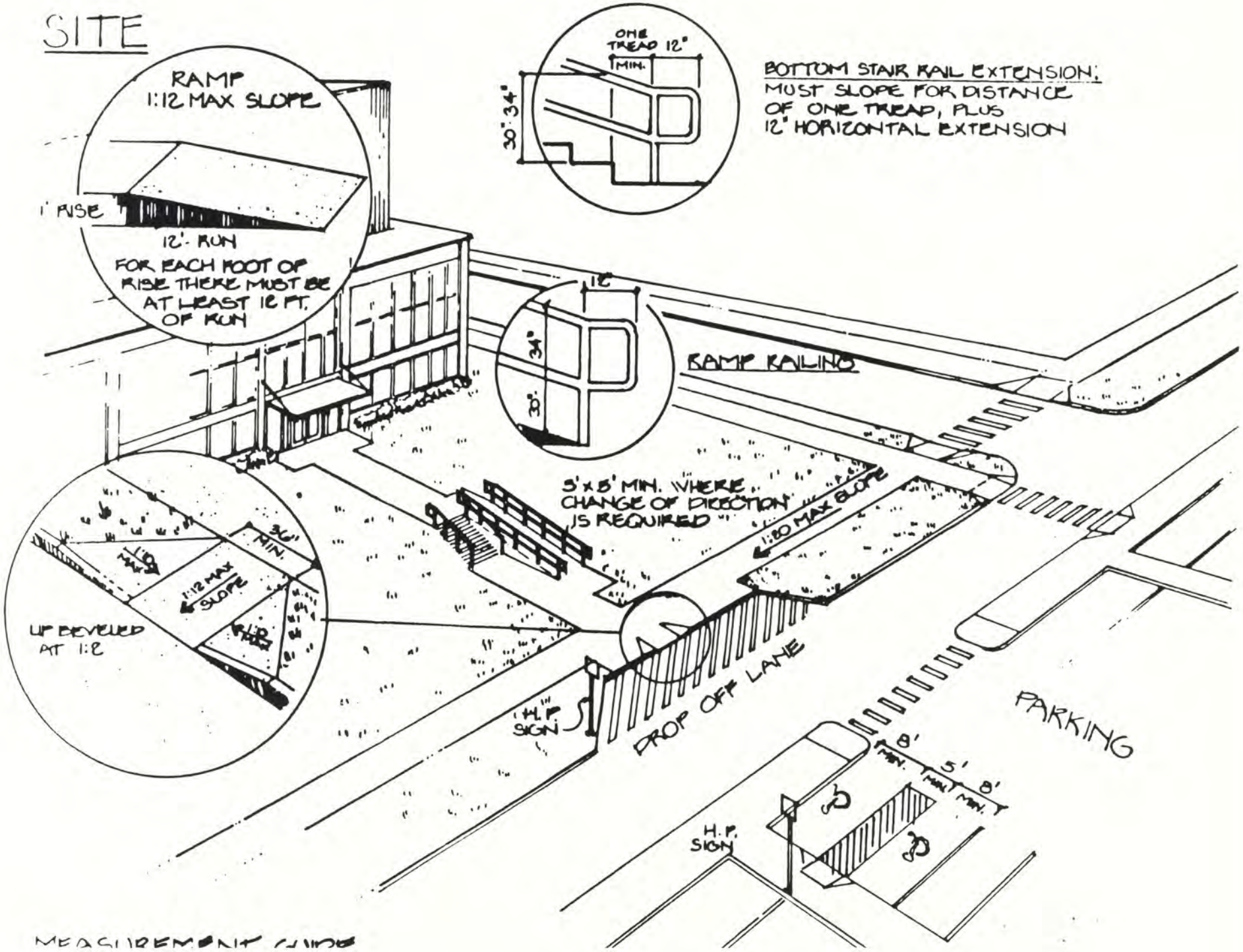

MEASUREMENT GUIDE

ENTRANCE

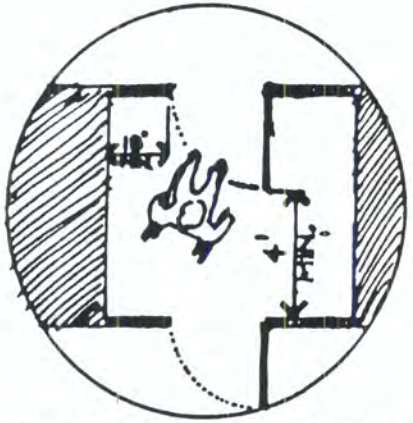

PLAN AT VESTIBULE

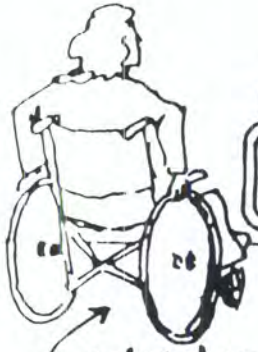

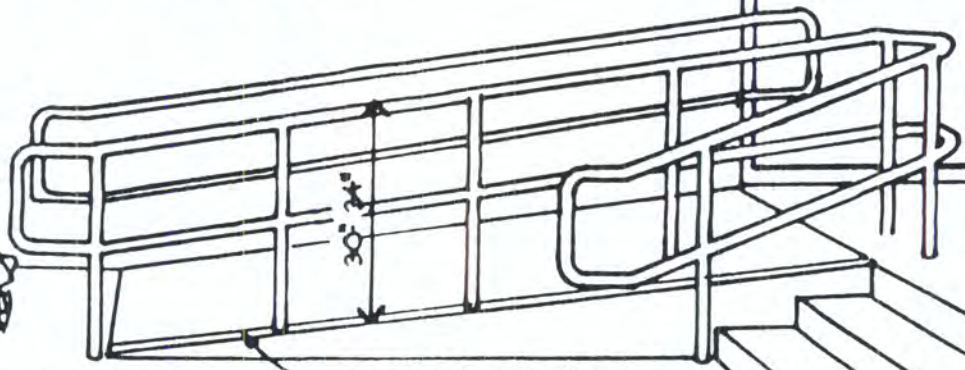

60" × 60" MIN. LANDING REQUIRED WHERE CHANGE OF DIRECTION OCCURS

EDGE PROTECTION

RAMP

RAILING

THRESHOLD

NOSING

STAIR RISE & TREAD

MEASUREMENT GUIDE

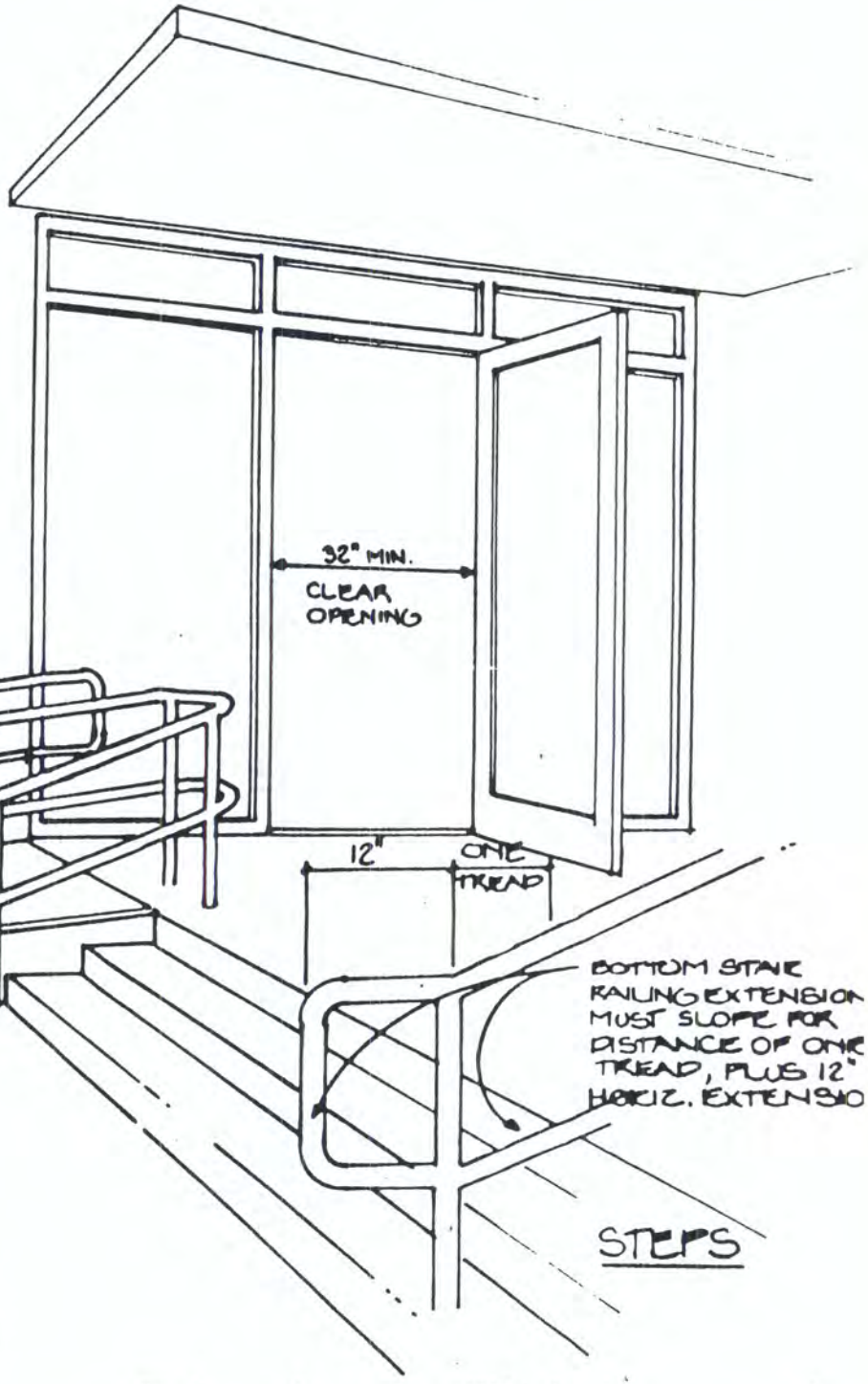

STEPS

BOMA International's

ADA Compliance Guidebook

A Checklist for Your Building

Meeting the Title III Provisions of the Americans with Disabilities Act: Public Accommodations and Commercial Facilities

A summary, explanation and survey for compliance evaluation

BOMA

BOMA International's

ADA Compliance Guidebook

A Checklist for Your Building

Meeting the Title III Provisions of the Americans with Disabilities Act: Public Accommodations and Commercial Facilities

BOMA International, founded in 1907, is the oldest and largest trade association exclusively representing the office building industry. The 15,000 members of its 100 local associations own or manage more than 5 billion square feet of office space. Information on membership may be obtained by calling (202) 408-2662.

Published by the
Building Owners and Managers Association International
1201 New York Avenue N.W., Suite 300, Washington D.C. 20005
Phone: (202) 408-2662 Fax: (202) 371-0181

Under the direction of:

Stephen P. Hokanson, CPM, President
Thomas B. McChesney, First Vice President
J.R. Nicholson, CRE, CPM, Secretary/Treasurer
Mark W. Hurwitz, Ph.D., CAE, Executive Vice President

Compiled, written, and edited by:

Lawrence G. Perry, AIA, BOMA International Codes Representative
Michael A. Jawer, Director, Legislative Affairs
John T. Murdoch, Associate Codes Representative
James C. Dinegar, Vice President, Government and Industry Affairs

BOMA International

BOMA developed this guidance in an effort to promote voluntary compliance with the Americans with Disabilities Act within the commercial property community. BOMA supports the goal of making buildings accessible, and has worked with federal agency officials as well as representatives of disabled advocacy organizations to shape reasonable rules that will promote accessibility in office buildings.

The subject matter contained in this Guidebook is taken from the Department of Justice's final rules implementing Title III of the Americans With Disabilities Act (printed in the *Federal Register*, 28 CFR Part 36, July 26, 1991).

CAVEAT

BOMA International has taken extreme care and imposed high procedural standards in developing this Guidebook. It is offered as a useful service to the office building industry and to the public. The contents are presented with no warranty either expressed or implied and BOMA officers, staff, and/or retained consultants assume no legal responsibility for the accuracy of the presentations, comments or other information contained herein. Neither is liability assumed for the outcome of decisions, contracts, commitments or obligations made on the basis of this information.

INTRODUCTION

The Americans with Disabilities Act (ADA), signed by President Bush in July 1990, is sweeping legislation designed to extend civil rights protection to persons with disabilities. The law is divided into four major Titles that prohibit discrimination against the disabled in employment, state and local government services, public transportation, public accommodations, and telecommunications.

Title I: Employment

Employers may not discriminate against a person with a disability in hiring or promotion if the person is otherwise qualified for the job. Employers must provide "reasonable accommodation" to persons with disabilities, including such steps as job restructuring and modification of equipment.

Information on the Title I provisions can be obtained from:
The Equal Employment Opportunity Commission, 1801 L Street N.W., Washington, D.C. 20507. Phone 1-800-USA-EEOC (voice) or 1-800-800-3302 (TDD).

Title II: Public Services and Transportation

Subtitle A prohibits state and local governments from discriminating against persons with disabilities.

Subtitle B provides for accessibility to public transit buses, rail lines, and bus and train stations.

Information on the public transportation provisions can be obtained from:
The U.S. Department of Transportation, 400 Seventh Street S.W., Washington, D.C. 20590. Phone (202) 366-9305 (voice) or (202) 755-7687 (TDD).

Title III: Public Accommodations

Persons with disabilities are to be provided accommodations and access equal to, or similar to, that available to the general public.

The final rules implementing Title III of the Americans with Disabilities Act were published in the Federal Register of July 26, 1991. To obtain a copy, call the U.S. Department of Justice at (202) 514-0301.

Questions on the final rules can be directed to:
The Office of the Americans with Disabilities Act, Civil Rights Division, U.S. Department of Justice, P.O. Box 66118, Washington, D.C. 20035-6118. Phone (202) 514-0301 (voice) or (202) 514-0383 (TDD).

Technical information on the ADA accessibility provisions can be obtained from: The U.S. Architectural and Transportation Barriers Compliance Board, 1111 18th Street N.W., Suite 501, Washington D.C. 20036. Phone 1-800-USA-ABLE (voice or TDD).

Title IV: Telecommunications

Companies offering telephone service to the general public must offer telephone relay service to persons who use telecommunications devices for the deaf (TDDs) or similar devices.

Information on the Title IV provisions can be obtained from:
The Federal Communications Commission, 1919 M Street N.W., Washington, D.C. 20554. Phone: (202) 634-1837 (voice) or (202) 632-1836 (TDD).

PURPOSE OF THIS GUIDEBOOK

BOMA's *ADA Compliance Guidebook: A Checklist for Your Building* offers detailed information on the Title III regulations addressing accessibility in buildings. (Certain other portions of Title III, dealing with policies and procedures, exams and courses, are not covered in this document.) This Guidebook serves as a reference document and workbook to be used in assessing the level of ADA Title III compliance within a building or facility.

HOW TO USE THE GUIDEBOOK

BOMA International developed this Guidebook in order to provide a clearer understanding of the ADA Title III requirements. The first several sections explain these requirements, followed by a detailed Checklist to be used in beginning an assessment of the impact of Title III provisions on any given building.

Be sure to read the introductory text to understand the general principles of the ADA — including the definition of terms used, the different categories of buildings and facilities, and the accessibility requirements themselves.

After reading the introductory text, proceed to the Checklist. Review the "technical elements" (1-20) to determine which portions are applicable to the building or facility to be surveyed. Review the "special application" sections to determine if the building or facility contains any of the occupancies with additional requirements. Before actually carrying out the survey, verify that the person who will be "walking the building" has the ability to accurately document existing conditions. (Note: some provisions, such as the section on "elevators," are quite technical and call for a qualified reviewer.)

Next, have the building or facility surveyed, using the Checklist as a guide. If the building or facility is subject to the barrier removal requirements (see section on "Removal of Barriers"), a determination needs to be made as to whether barriers exist and, if so, what steps should be taken — and what resources devoted — to remove them.

If alterations subject to the ADA are planned, the Checklist can be used for the following purposes. First, the Checklist can be used to review the technical requirements for any altered elements. Second, any existing elements not in accord with ADA requirements, as identified in the Checklist, may be able to be made accessible during alterations. Third, the survey data can be used to determine the extent of any additional work that might be required to make the altered area or areas accessible.

TABLE OF CONTENTS

I. INTRODUCTION I

II. HOW TO USE THIS GUIDEBOOK III

III. OVERVIEW OF THE TITLE III RULES 2

General Principles 2
Public Accommodation vs. Commercial Facility 3
Implementation of Title III 4
Penalties 4
Good Faith Efforts 4
Certification of Codes 4
Tax Deduction and Credits 4

IV. AUXILIARY AIDS AND SERVICES IN PUBLIC ACCOMMODATIONS 5

What are Auxiliary Aids? 5
What is an Undue Burden? 5

V. REMOVAL OF BARRIERS IN PUBLIC ACCOMMODATIONS 6

What are Considered Barriers? 6
What is Readily Achievable? 6
Examples of Readily Achievable Measures 6
Technical Requirements 6
Recommended Priorities for Removal of Barriers 7
Alternatives to Barrier Removal 7
Continuing Obligation to Remove Barriers 7
Preparing a Barrier Removal Plan 7

VI. ACCESSIBLE SITES AND BUILDINGS 8

New Construction 8
Additions 8
Alterations 8
Definition 8
General Principles 8
Technically Infeasible 8
Primary Function Areas 8
Path of Travel 9
Disproportionate Costs 9
[illegible] ..... [illegible]

VII. CHECKLIST

Checklist Format 10
General Information 11
Technical Elements

1. Accessible Route - Exterior 13
2. Accessible Parking 16
3. Curb Ramps 19
4. Entrances 21
5. Accessible Route - Interior 23
6. Ramps 28
7. Stairs 30
8. Elevators 32
9. Platform Lifts 36
10. Doors 38
11. Drinking Fountains 41
12. Toilet Rooms and Bathrooms 42
12.1 Water Closets 44
12.2 Toilet Stalls 45
12.3 Urinals 47
12.4 Lavatories and Mirrors 48
12.5 Sinks 49
12.6 Bathtubs 50
12.7 Shower Stalls 52
12.8 Grab Bars 54
12.9 Tub/Shower Seats 55
13. Assembly Areas 56
14. Storage 58
15. Alarms 59
16. Signage 60
17. Public Telephones 62
18. Seating and Tables 65
19. Automatic Teller Machines 66
20. Dressing and Fitting Rooms 67

Special Application Sections

Restaurants and Cafeterias 68
Medical Care Facilities 70
Business and Mercantile 72

OVERVIEW OF THE TITLE III RULES

GENERAL PRINCIPLES

The key points relating to Title III of the Americans with Disabilities Act are highlighted below. These represent a brief overview, and are described in more detail in the sections that follow.

Intent of the Law

The intent of the ADA is to provide persons with disabilities with accommodations and access equal to, or similar to, that available to the general public.

Disability

The ADA defines an "individual with a disability" as a person who has a physical or mental impairment that substantially limits one or more major life activities (e.g. seeing, hearing, speaking, walking, breathing, performing manual tasks, learning, caring for oneself, or working.)

The word "disability," used throughout the ADA, is the most up to date term reflecting the sensibilities of most citizens with a disability. Many individuals and organizations object to being called "handicapped" or referred to as "the handicapped." Since this is a significant and sensitive issue, the law consistently uses and encourages use of the term "disability" or "persons with disabilities."

Auxiliary Aids in Public Accommodations

As of January 26, 1992, a "public accommodation" must provide auxiliary aids and services when they are necessary to ensure effective communication with persons with hearing, vision, or speech impairments — provided that such actions do not constitute an "undue burden."

Removal of Barriers in Public Accommodations

The ADA requires that architectural and communications barriers be removed in existing "public accommodations" effective January 26, 1992 provided it is "readily achievable" to do so.

Accessible Alterations and New Construction

Alterations made to "public accommodations" or "commercial facilities" that begin after January 26, 1992 must be made accessible in line with specific technical ADA requirements. New buildings "designed and constructed for first occupancy after January 26, 1993" must be made fully accessible to and usable by persons with disabilities, in accordance with the same requirements.

Alterations or New Construction Not Required

The ADA does not actually require new construction, nor does it require alterations to existing buildings. However, when new construction or alterations are undertaken, such work must be done in accordance with the law's accessibility provisions.

Distinctions for Building Use

In addition to the technical requirements for alterations and new construction, the ADA contains specific requirements for restaurants, medical care facilities, business and mercantile establishments, libraries, and transient lodging. If the activities in a building or facility should fit into one or more of these use groups, each area must comply with the specific accessibility requirements for that type of use.

Equivalent Facilitation

Departures from the ADA technical and scoping requirements may be permitted where the alternative designs and technologies used will provide substantially equivalent access to, and usability of, a site or facility (see section on "Implementation of Title III").

Costs Cannot be Borne by the Disabled

A person with a disability shall not be charged for the costs incurred in complying with the ADA, such as the cost of providing auxiliary aids and services, removing barriers, or making alterations.

Landlord/Tenant Responsibilities

The ADA is not intended to affect existing lease agreements between landlords and tenants. For example, the tenant is generally responsible for making readily achievable changes in its own office suite (as well as ensuring that alterations made in that suite are accessible), and the landlord is generally responsible for making readily achievable changes in common areas (as well as ensuring that alterations made in common areas are in compliance with the ADA) — unless provided otherwise in the lease agreement.

PUBLIC ACCOMMODATION VS. COMMERCIAL FACILITY

Title III of the ADA divides covered buildings and facilities into two categories: "Public Accommodations" and "Commercial Facilities."

A public accommodation is responsible for meeting the ADA requirements for removal of barriers. (However, areas of a public accommodation that are used *only* by employees as work areas are not subject to this requirement. In such case, "reasonable accommodation" under Title I of the ADA must be made for employees with a disability to enter and use those areas.)

A public accommodation must provide auxiliary aids when they are necessary to ensure effective communication with persons who have hearing, vision, or speech impairments (see section on "Auxiliary Aids and Services"). A public accommodation must also meet the technical requirements for alterations and new construction.

The responsibilities for providing auxiliary aids and for removal of barriers *do not* apply to commercial facilities. (However, "reasonable accommodation" under Title I of the ADA must be made for employees with a disability to enter and use the facility.)

USE THE CRITERIA BELOW TO DETERMINE WHICH CATEGORY YOUR BUILDING OR FACILITY IS IN:

Public Accommodation

A "public accommodation" is a private entity that owns, leases (or leases to), or operates a "place of public accommodation." The place of public accommodation is a private facility whose operations affect commerce and fall within at least one of 12 categories:

- Place of lodging (e.g an inn, hotel or motel).
- Establishment serving food or drink (a restaurant, bar, or other establishment serving food and drink).
- Place of exhibition or entertainment (a movie house or theater).
- Place of public gathering (an auditorium, lecture hall, or convention center).
- Sales or rental establishment (a bakery, grocery store, clothing store, or other sales or rental establishment),
- Service establishment (a dry cleaner, bank, barber shop, beauty shop, travel agency, shoe repair service, office of an accountant or lawyer, pharmacy, insurance office, professional office of a health care provider, or other service establishment).
- Station used for specified public transportation.
- Place of public display or collection (a museum, library, or gallery).
- Place of recreation (a park, zoo, or amusement park).
- Place of education (a nursery school, elementary or secondary school, undergraduate or post-graduate private school, or other place of education).
- Social service center establishment (day care center, senior citizen center, or food bank).
- Place of exercise or recreation (a gymnasium, health spa, or other place of exercise or recreation).

The requirements described above are the responsibility of the public accommodation — not the place of public accommodation. However, the requirements do not extend beyond the place of public accommodation to other areas of the facility.

Commercial Facility

A "commercial facility" is a facility intended for non-residential use by a private entity and whose operations affect commerce. Examples are office buildings, warehouses, factories, and other buildings in which employment may occur.

While a public accommodation contains areas that are meant for the public's use, a commercial facility is built for a private business and its employees. For instance, an office building that is occupied by a single tenant and contains no places of public accommodation would be considered a commercial facility. According to an interpretation from the Justice Department, it is possible for part of a building to be a commercial facility while other portions are public accommodations.

IMPLEMENTATION OF TITLE III

Penalties

The Americans with Disabilities Act is a civil rights law, which means that unless a state law or local building code adopts the ADA's requirements — or unless the given code is certified by the Justice Department — state and local building inspectors will not be enforcing the law. It will be enforced, as other civil rights laws are, by action of an aggrieved party. That party does not have to allege discrimination "after the fact." The ADA permits a person to file a lawsuit if he/she has "reasonable grounds" for believing that discrimination is about to occur, where new construction or alterations are concerned.

Several types of legal remedy are available. The first is injunctive relief, i.e. correction of the accessibility problem. This will be mandated by a court in all cases where discrimination is proved. However, if the Justice Department has reasonable cause to believe that someone has engaged in a pattern or practice of discrimination in violation of the ADA, the government can file a civil suit that may result in various measures, from correction of the problem to a penalty of up to $50,000 for the first violation and up to $100,000 for any subsequent violation.

Good Faith Efforts

In any judicial review of a building owner's actions, consideration will be given to "good faith" efforts he/she has made to comply with the law. For example, the development and implementation of a plan to remove barriers to the disabled in a building could serve as evidence of a good faith effort. The Justice Department recommends this action, as well as consulting with local organizations representing persons with disabilities to obtain their suggestions on cost effective ways to promote accessibility. This Guidebook, especially the checklist portion, is provided to assist building owners and managers in making a "good faith" effort to comply.

The good faith standard requires *positive* compliance efforts — as opposed to demonstrating a lack of willful, intentional, or reckless disregard of the law. Furthermore, no business or organization is excused from complying with the ADA because of any failure to become educated or receive technical assistance.

Certification of Codes

The ADA provides that a state law or local building code can be "certified" by the Justice Department as meeting or exceeding the ADA accessibility requirements. However, this process could take years and no alternative procedure has been established that would enable a building owner or manager to determine whether his/her building is in compliance.

The effect of Justice Department certification of a state or local code is not a blanket approval for that code. Instead, it is a rebuttable presumption that those portions of the code dealing with accessibility for the disabled meet the minimum requirements set out in the ADA. Any amendments made to the state or local code after it is certified by the Justice Department will not be considered certified — only those portions of the code dealing with accessibility issues at the time of certification. Since it is not the building code process itself that is approved, there is no assurance that any interpretations or waivers issued by a local building official, or any efforts at providing "equivalent facilitation," will be acceptable to persons with disabilities or the Justice Department.

The only other assistance set forth in the ADA rules (and, again, a process that could take years) is a voluntary scheme whereby a model code or standard could be informally reviewed by the Justice Department to determine how it is consistent with the accessibility standards of the ADA.

Tax Deduction and Credits

The Internal Revenue Code allows a deduction of up to $15,000 per year for expenses associated with the removal of qualified architectural barriers. Small businesses are also allowed a tax credit for certain costs of complying with the ADA. An eligible small business is one whose gross receipts are under $1 million or whose workforce consists of 30 or fewer full time employees. Qualifying businesses may claim a credit of up to 50 percent of eligible access costs over $250 but under $10,250. The necessary and reasonable costs of removing architectural, physical, and communications barriers are included among "eligible expenditures."

AUXILIARY AIDS AND SERVICES IN PUBLIC ACCOMMODATIONS

As of January 26, 1992, a public accommodation shall take whatever steps may be necessary to ensure that no one with a disability is excluded, denied services, segregated, or otherwise treated differently than anyone else because of the absence of auxiliary aids and services — unless it can be demonstrated that taking those steps would fundamentally alter the nature of the goods, services, facilities, privileges, or accommodations being offered or would result in an "undue burden."

What are Auxiliary Aids?

"Auxiliary aids and services" include, but are not limited to:

- qualified interpreters
- assistive listening devices
- telephone handset amplifiers
- notetakers
- written materials for persons with hearing impairments
- telecommunications devices for deaf persons (TDDs)
- videotext displays
- qualified readers
- taped texts
- Brailled or large print materials for persons with vision impairments.

What is an Undue Burden?

The ADA defines an undue burden as "significant difficulty or expense." Whether an action is an undue burden is to be determined on a case by case basis. No numerical formula or threshold of any kind was set out by the Justice Department. However, the following factors are to be considered:

- The nature and cost of the action needed.
- The overall financial resources of the site or sites involved; the number of persons employed; the effect on expenses and resources; or the impact upon the operation of the site.
- The geographic separateness and the administrative or fiscal relationship of the site or sites to any parent corporation or entity.
- If applicable, the overall financial resources and size of any parent corporation or entity.
- If applicable, the type of operation of any parent corporation or entity.

The factors above are identical to those to be used in determining if barrier removal is "readily achievable" (see next section). However, undue burden is a higher standard than readily achievable in that it requires more of an effort on the part of the public accommodation.

If the provision of a given auxiliary aid or service would result in an undue burden, the public accommodation shall provide an alternate aid or service that ensures, to the maximum extent feasible, that persons with disabilities receive the same goods, services, facilities, privileges, or accommodations offered to everyone else.

REMOVAL OF BARRIERS IN PUBLIC ACCOMMODATIONS

As of January 26, 1992, public accommodations are required to remove architectural barriers and communications barriers that are structural in nature in existing facilities, where such removal is "readily achievable."

What are Considered Barriers?

An architectural barrier is a physical object that impedes a disabled person's access to, or use of, a facility. Examples include a flight of stairs as the only means of entry into a building or a water fountain that cannot be used by a person in a wheelchair.

Communications barriers that are structural in nature are those which are an integral part of the physical structure of a facility. Examples include alarm systems and permanent signage. (Note: communications equipment and devices such as TDDs and assistive listening systems are not included. These are addressed separately under the requirements for "Auxiliary Aids.")

What is Readily Achievable?

The ADA defines readily achievable as "easily accomplishable and able to be carried out without much difficulty or expense."

Whether an action is readily achievable is to be determined on a case by case basis. No numerical formula or threshold of any kind was set out by the Justice Department. However, the following factors are to be considered:

- The nature and the cost of the action needed.
- The overall financial resources of the site or sites involved; the number of persons employed at the site; the effect on expenses and resources; or the impact upon the operation of the site.
- The geographic separateness and the administrative or fiscal relationship of the site or sites to any **parent** corporation or entity.
- If applicable, the overall financial resources and size of any **parent** corporation or entity.
- If applicable, the type of operation of any **parent** corporation or entity. In addition, each barrier removal action need not be considered in complete isolation when determining what is readily achievable. The costs of other barrier removal actions may be considered as another factor when determining if a measure is readily achievable.

Examples of Readily Achievable Measures

The following are examples of steps that may be readily achievable, according to the Justice Department. The list is not intended to be exhaustive, but rather to provide an illustration of barrier removal that could be readily achievable. Whether or not any of these measures, or others, is readily achievable must be determined on a case by case basis.

- Installing ramps
- Making curb cuts in sidewalks and entrances
- Repositioning shelves
- Rearranging tables, chairs, vending machines, display racks, and other furniture
- Repositioning telephones
- Adding raised markings on elevator control buttons
- Installing flashing alarm lights
- Widening doors
- Installing offset hinges to widen doorways
- Eliminating a turnstile or providing an alternative accessible path
- Installing accessible door hardware
- Installing grab bars in toilet stalls
- Rearranging toilet partitions to increase maneuvering space
- Insulating lavatory pipes under sinks to prevent burns
- Installing a raised toilet seat
- Installing a full length bathroom mirror
- Repositioning a paper towel dispenser in a bathroom
- Creating designated accessible parking spaces
- Installing an accessible paper cup dispenser at an existing inaccessible water fountain
- Removing high pile, low density carpeting

Technical Requirements

Removal of barriers shall be done in accordance with the technical requirements for alterations and new construction (as contained in the Checklist section of this document).

When compliance with the technical requirements is not readily achievable, it is acceptable to take other readily achievable barrier removal measures that provide persons with disabilities with access equal to, or similar to, that available to the general public. However, no measure shall be undertaken that poses a significant risk to the health or safety of persons with a disability or others.

Recommended Priorities for Removal of Barriers

The ADA contains priorities that a public accommodation should consider when deciding what is readily achievable. These priorities are not mandatory, but rather suggested ways to determine what types of barriers should be mitigated or eliminated first. The priorities are as follows:

1. Access from public sidewalks, parking, or public transportation stops to a building entrance. (Such measures include installing an entrance ramp, widening entrances, and providing accessible parking spaces.)
2. Access to any areas where goods and services are made available to the public. (Examples include adjusting the layout of display racks, rearranging tables, providing Brailled and raised signage, widening doors, installing visual alarms, and installing ramps.)
3. Access to restroom facilities. (Examples include the removal of obstructing furniture or vending machines, widening doors, installing ramps, providing accessible signage, widening toilet stalls, and installing grab bars.)
4. Access to any remaining ways to the goods and services provided.

Alternatives to Barrier Removal

If barrier removal is not readily achievable, the goods, services, facilities, privileges, advantages, or accommodations of a public accommodation shall be made available through alternative methods, if it is readily achievable to do so.

Examples of alternatives to barrier removal are:

- Providing valet parking for persons with disabilities.
- Providing curb service or home delivery.
- Retrieving merchandise from inaccessible shelves or racks.
- Relocating activities to accessible locations.

A person with disabilities shall not be charged for the costs associated with providing an alternative method.

Continuing Obligation to Remove Barriers

The obligation to engage in readily achievable barrier removal is a continuing responsibility of a public accommodation. Items that are currently not readily achievable may become so in the future.

No periodic assessment or self evaluation is required by the ADA. However, the Justice Department urges public accommodations to establish procedures for an ongoing assessment of their compliance with the barrier removal requirements.

Preparing a Barrier Removal Plan

The Justice Department recommends the development of plans designed to achieve compliance with the ADA's barrier removal requirements before they become effective on January 26, 1992. Such a plan, if appropriately designed and diligently executed, could serve as evidence of a good faith effort to comply. In developing its plan, a public accommodation should consult with local organizations representing persons with disabilities and solicit their suggestions for cost effective means of making individual places of public accommodation accessible.

Before determining if barrier removal is readily achievable, a public accommodation must first identify any existing barriers. The most appropriate means of doing so is through self evaluation, by comparing the existing building or facility to the requirements for new construction and alterations. (The Checklist section of this document is designed to be used for this process.)

Once all existing barriers have been identified, a determination of what is readily achievable can begin. The priorities listed above, and the input of local disability organizations, should be used as a guide to determine which barriers are the most critical. All existing barriers that can be removed through readily achievable measures should then be removed.

Where barriers remain that cannot be removed by readily achievable means, the public accommodation should establish a periodic review process, as it may become readily achievable to remove those barriers at some future time.

The entire self evaluation process, and the subsequent determination of readily achievable measures, should be fully documented. In particular, a list should be maintained of existing barriers that are not removed, along with the specific reasons why their removal was not readily achievable.

Throughout this process, the building owner or manager must be aware that decisions to remove or not remove barriers will be subject to scrutiny by others in the event of a subsequent discrimination complaint. By involving local organizations representing persons with disabilities in the identification and prioritization of existing barriers, the likelihood of future complaints should be greatly diminished.

ACCESSIBLE SITES AND BUILDINGS

NEW CONSTRUCTION

New buildings and facilities that are designed and constructed for first occupancy after January 26, 1993, must comply with the technical requirements for new construction (see Checklist section). The term "designed and constructed for first occupancy after January 26, 1993" is fulfilled by two criteria:

1. If the last application for a building permit or permit extension is filed (and, where applicable, certified as complete by the local jurisdiction) after January 26, 1992; **and**
2. If the first certificate of occupancy is issued after January 26, 1993.

The date of January 26, 1992, is relevant only to the last application for a permit or permit extension for a facility. Thus, if an entity has applied for only a "foundation" permit, the date of that application has no effect, because the entity must also apply for and receive a permit at a later date for the actual superstructure.

ADDITIONS.

An addition to an existing building or facility shall be regarded as an alteration. Each space or element added to the existing facility shall comply with the technical requirements for new construction (see Checklist section).

Construction of an addition does **not** trigger an obligation to retrofit the entire building. However, if the addition involves a "primary function area," the ADA's "path of travel" requirements will apply (see next section).

ALTERATIONS

An alteration to a place of public accommodation or commercial facility that is begun after January 26, 1992 shall comply with the technical requirements for new construction and alterations (see Checklist section).

Definition

An alteration is a change that affects or could affect the use of a building or facility, such as a remodeling, renovation, rehabilitation, historic restoration, changes or rearrangements in structural parts or elements, or extraordinary repairs.

Examples of an alteration include, but are not limited to:

- relocating a door
- replacing a floor
- relocating an electrical outlet
- installing or replacing faucet controls
- replacing door handles or hinges

Examples of work **not** considered alterations (unless they affect the usability of the building or facility) include, but are not limited to:

- normal maintenance
- reroofing
- painting or wallpapering
- asbestos removal
- changes to mechanical and electrical systems

General Principles of Alterations

If existing elements are altered, each such altered element shall comply with the applicable technical provisions. Only the altered element must comply (e.g. replacing a faucet does not require making the entire restroom accessible). However, if alterations to the elements in a space, when considered together, amount to an alteration of a space, the entire space shall comply with the technical provisions.

No alteration shall be undertaken which decreases the accessibility or usability of a building or facility below the requirements for new construction at the time of alteration. No alteration of an existing element, space, or area of a building or facility shall impose a requirement for greater accessibility than that which would be required for new construction. For example, if the elevators and stairs in a building are being altered and the elevators are, in turn, being made accessible, then no accessibility modifications are required to the stairs that connect levels served by the elevator.

An alteration to a "primary function area" will trigger an obligation to provide an accessible path of travel to the altered area.

Technically Infeasible

If structural conditions in an existing building or facility make it virtually impossible to meet the accessibility requirements for alterations, those accessibility requirements will be deemed "technically infeasible." For example, the removal or altering of a load-bearing member in order to provide accessibility would be technically infeasible.

In alteration work, if full compliance with the technical provisions is technically infeasible, the alteration shall provide accessibility to the "maximum extent feasible." In such cases, any other elements or features of the building or facility that are being altered and can be made accessible shall be made so.

Primary Function Areas

A "primary function area" is any room or space where the major activities for which the facility is intended are carried out. Examples include, but are not limited to, the customer services lobby of a bank, the dining area of a cafeteria, the meeting rooms in a conference center, as well as offices and all other work areas in which the activities of the public accommodation or commercial facility are carried out. Areas such as mechanical rooms, boiler rooms, storage rooms, copier rooms, employee lounges and locker rooms, janitorial closets, entrances, corridors, and restrooms are not considered primary function areas

Path of Travel

An alteration that affects the usability of, or access to, a primary function area will trigger the obligation to provide an accessible path of travel to the altered area. The restrooms, telephones, and drinking fountains serving the altered area must also be made accessible.

A "path of travel" is defined broadly as a continuous, unobstructed route by which the primary function area can be approached, entered, and exited, and which connects the area with the entrance to the facility and other parts of the facility.

When a tenant is making alterations upon its premises under terms of a lease that grant it the authority to do so, the alterations do *not* trigger a path of travel obligation upon the landlord in areas of the facility under the landlord's authority that are not otherwise being altered.

Minor alterations to individual elements in a primary function area do not trigger a path of travel obligation (e.g. alterations to such elements as windows, hardware, light switches and thermostats, electrical outlets, or signage). However, these elements must be made accessible if they are altered.

If alteration work is limited solely to the electrical, mechanical, or plumbing system, or to hazardous material abatement or to automatic sprinkler retrofitting, and does not involve the alteration of any element required to be accessible, then there is no obligation to provide a path of travel.

Disproportionate Costs

In some circumstances, the costs of providing an accessible path of travel to an altered area may be disproportionate in comparison to the alteration costs to the primary function area. The costs of providing an accessible path of travel will be considered "disproportionate" when the cost exceeds 20 percent of the overall cost of the alteration to the primary function area.

Where the path of travel costs are disproportionate, the path of travel shall be made accessible to the extent that it is not disproportionate. According to an interpretation from the Justice Department, this does not *necessarily* require an expenditure of the full 20 percent. In cases where a full expenditure of 20 percent would not increase accessibility along the path of travel, alterations should be made to the extent that they would result in an increase in accessibility. When the cost of alterations necessary to provide an accessible path of travel is disproportionate to the cost of the overall alteration, priority should be given to those elements that will provide the greatest access, in the following order:

- An accessible entrance
- An accessible route to the altered area
- At least one accessible restroom for each sex or a single unisex restroom
- Accessible telephones
- Accessible drinking fountains
- Additional accessible elements such as parking, storage, and alarms

Alterations Over Time

The obligation to provide an accessible path of travel shall not be evaded by performing a series of small alterations to the area if those alterations could have been performed as a single undertaking.

If a primary function area has been altered without providing an accessible path of travel, and subsequent alterations of that area or a different area on the same path of travel are undertaken within three years of the original alteration, then the total cost of alterations to the primary function areas on that path of travel during the preceding three year period shall be considered in determining whether the cost of making that path of travel accessible is disproportionate.

Only alterations undertaken after January 26, 1992, shall be considered in determining disproportionality between path of travel and primary function alteration costs.

Alterations to Historic Properties

Alterations to a qualified historic building or facility shall comply with the technical requirements for new construction and alterations, except as specified below.

A qualified historic building or facility is a building or facility that is:

1. Listed in or eligible for listing in the National Register of Historic Places; *or*
2. Designated as historic under an appropriate state or local law.

When alterations are planned to a building or facility that is subject to the National Historic Preservation Act, the Advisory Council on Historic Preservation must be given a reasonable opportunity to comment prior to approval of the undertaking. If alterations are planned to a qualified historic building that is *not* subject to the National Historic Preservation Act, and the entity undertaking the alterations believes the ADA requirements would threaten or destroy its historic significance, then the state Historic Preservation Officer should be consulted.

If the Advisory Council on Historic Preservation or the state Historic Preservation Officer agrees that compliance with the ADA requirements for a specific element would threaten or destroy the historic significance of the building or facility, the alternative technical provisions (as noted in the Checklist) are permitted for that element.

CHECKLIST FORMAT

Sections

The checklist is divided into three separate sections, as follows:

1. **General.** This section provides overall information regarding application of the technical requirements appearing in the subsequent sections. This section explains where the technical 'elements' (section 2) apply, and also where a specific building use is subject to the special application section requirements (section 3). In addition, general exceptions, and the application of these provisions for employee work areas and temporary structures, are addressed.
2. **Technical Elements.** This section consists of 29 distinct elements for which there are specific requirements to make the element accessible for persons with disabilities. Both scoping provisions (how many) and technical provisions (what and where) are included in each element. The scoping provisions (typically titled 'where required' or 'where applicable') are separated from the technical provisions by a blackened 'Item' box.
3. **Special Application Sections.** In addition to the technical elements section, certain uses (occupancies) are subject to additional requirements as contained in this section.

Page Layout

Each page of the checklist is divided into five columns, as follows:

ADAAG SEC.	ITEM	TECHNICAL REQUIREMENTS	EXISTING CONDITION/NOTES	OK
This title is an abbreviation for 'Americans with Disabilities Act Accessibility Guidelines Section.' The numbers in this column reference the Final Rule (Federal Register 28 CFR Part 36, July 26, 1991), where additional text, commentary and diagrams may be found.	This column names the specific requirement being addressed. It identifies the characteristic of the element being addressed in the following column.	This column contains either the specific scoping provisions for the element, or the technical provisions required for the characteristic of the element being addressed. The technical provisions listed are typically those for new construction. Where the ADA guidelines provide specific exceptions or additional requirements for alterations or historic preservation work, those items are included, and are clearly identified as applying only to alterations or to historic preservation.	This column is provided for the user to record information on the existing condition of the item being surveyed. Information that may be recorded in this column includes existing quantities and dimensions, notations of conditions not in accordance with 'technical requirements', and possible remedies.	This small column is provided so that items which are in accordance with the technical requirements may be "checked off." This will assist the user in identifying items that are not in accordance with the technical requirements once the survey has been completed.
NOTES/SKETCHES: Where space is available, a blank area has been provided at the end of each element, to allow for additional notes or small sketches to be added. It is recommended that the reviewer also carry additional blank pages, so that additional notes or sketches can be provided as needed.				

BOMA ®
INTERNATIONAL

GENERAL INFORMATION

Building: _____
Date Reviewed: _____
Reviewed by: _____

ADAAG SEC.	ITEM	TECHNICAL REQUIREMENTS	EXISTING CONDITION/NOTES	OK
2.1	Provisions for Adults	The technical provisions of ADAAG are based upon adult dimensions and anthropometrics.		
2.2	Equivalent Facilitation	Departures from particular technical and scoping requirements of ADAAG, by the use of other designs and technologies, are permitted where the alternative designs and technologies used will provide substantially equivalent or greater access to and usability of the facility.		
4.1.1(1)	New Construction and Alterations	When new construction or alterations are required to comply with the ADA, they shall comply with the applicable portions of **Elements 1-20**, unless otherwise provided in this section or as modified in a special application section.		
4.1.1(2)	Application Based on Building Use	Special application sections provide additional requirements for: • Restaurants and Cafeterias • Medical Care Facilities • Business and Mercantile • Libraries • Transient Lodging		
4.1.1(3)	Areas Used Only by Employees as Work Areas	Areas that are used only as work areas shall be designed and constructed so that persons with disabilities can approach, enter, and exit the areas. ADAAG does not require that any areas used only as work areas be constructed to permit maneuvering within the work area or to be constructed or equipped to be accessible.		
4.1.1(4)	Temporary Structures	ADAAG covers temporary buildings or facilities as well as permanent facilities. Temporary buildings and facilities are not of permanent construction but are extensively used or are essential for public use for a period of time. Temporary buildings or facilities covered by ADAAG include, but are not limited to: Reviewing stands Temporary classrooms Bleacher areas Exhibit areas Temporary banking facilities Temporary health screening services Temporary safe pedestrian access around a construction site Structures, sites and equipment directly associated with the actual process of construction, such as scaffolding, bridging, materials hoists, or construction trailers are not included		

BOMA ®
INTERNATIONAL

GENERAL INFORMATION Cont'd

Building: _____
Date Reviewed: _____
Reviewed by: _____

ADAAG SEC.	ITEM	TECHNICAL REQUIREMENTS	EXISTING CONDITION/NOTES	OK
4.1.1(5)(a)	General Exceptions	In new construction, full compliance with ADAAG is not required when it is structurally impracticable to do so. Full compliance will be considered structurally impracticable only in those rare circumstances when the unique characteristics of terrain prevent the incorporation of accessibility features. Where full compliance is structurally impracticable, the new construction shall comply with ADAAG to the extent it is not structurally impracticable. Any portion of the building or facility which can be made accessible shall comply to the extent that it is not structurally impracticable.		
4.1.1(5)(b)	General Exceptions	Accessibility is not required to: 1. Observation galleries used primarily for security purposes; or 2. Non-occupiable spaces accessed only by ladders, catwalks, crawl spaces, very narrow passageways, or freight *(non-passenger)* elevators, and frequented only by service personnel for repair purposes; such spaces include, but are not limited to: elevator pits, elevator penthouses, piping, or equipment catwalks.		

NOTES/SKETCHES:

BOMA® INTERNATIONAL

ELEMENT 1: ACCESSIBLE ROUTE - EXTERIOR

Building: _____

Date Reviewed: _____

Reviewed by: _____

ADAAG SEC.	ITEM	TECHNICAL REQUIREMENTS	EXISTING CONDITION/NOTES	OK
4.1.2(1)	Where required	At least one accessible route complying with this section shall be provided within the boundary of the site from the following areas to an accessible building entrance: Public transportation stops Accessible parking spaces Passenger loading zones, if provided Public streets and sidewalks.		
4.1.2(2)	Where required	At least one accessible route complying with this section shall connect accessible buildings, accessible facilities, accessible elements, and accessible spaces that are on the same site.		
1 4.1.7(3)(a)	Where required	**Historic Preservation:** At least one accessible route from a site access point to an accessible entrance shall be provided.		
4.3.2(1)	Location	The accessible route shall, to the maximum extent feasible, coincide with the route for the general public.		
4.3.3	Width	Minimum clear width: 36" *(except as allowed at doors)*		
4.3.3 Fig. 7	Width at Turns	36" clear width is permitted for a 90° turn if no additional turn is required within 48". Clear width with turns around an obstruction less than 48" wide shall be 42" minimum, with 48" minimum width at turn.		
4.34	Passing Space	If an accessible route is less than 60" wide, passing spaces are required at maximum 200' intervals. Passing space may be either a 60" X 60" space, or a T intersection of two walks or corridors.		
4.3.5 4.4.2.	Headroom	Minimum clear headroom: 80" If vertical clearance of an area adjoining an accessible route is reduced to less than 80", a barrier shall be provided.		
4.3.7	Slope	Running slope shall not exceed 1:20. *(If slope exceeds 1:20, refer to 'ramps' or 'curb ramps' section.)* Cross slope shall not exceed 1:50 (2%)		

Building: _____

Date Reviewed: _____

Reviewed by: _____

ADAAG SEC.	ITEM	TECHNICAL REQUIREMENTS	EXISTING CONDITION/NOTES	OK
4.3.8 4.5.2	Changes in Level	Up to 1/4": requires no edge treatment *(vertical edge permitted)*. 1/4" to 1/2": Edge shall be beveled with a slope no greater than 1:2. Greater than 1/2": Requires curb ramp, ramp, elevator, or platform lift. Stairs shall not be part of an accessible route.		
4.3.6 4.5	Ground and Floor Surfaces	Shall be firm, stable, and slip-resistant. *(If carpet is used, refer to requirements under **Element 5: Accessible Route**.)*		
4.29	Detectable Warnings	**At Hazardous Vehicular Areas.** If a walk crosses or adjoins a vehicular way, and the walking surfaces are not separated by curbs, railings, or other elements between the pedestrian areas and vehicular areas, the boundary between the areas shall be defined by a continuous detectable warning 36" wide, complying with the requirements below. **At Reflecting Pools.** The edges of reflecting pools not protected by railings, walls, or curbs, shall have detectable warnings complying with the requirements below. **Detectable Warnings.** Surface shall consist of raised truncated domes with the following features: Diameter: 0.9" nominal Height: 0.2" nominal Center to Center spacing: 2.35" nominal. The surface shall contrast visually with adjoining surfaces.		
4.5.4	Gratings	If gratings are located in walking surfaces, then they shall have spaces no greater than 1/2" wide in one direction. If gratings have elongated openings, then they shall be placed so that the long dimension is perpendicular to the dominant direction of travel.		
4.3.9	Doors	**Refer to Element 10: Doors.**		
4.1.2(3) 4.4.1	Protruding Objects	Objects projecting from walls with their leading edges between 27" and 80" above the finished floor shall protrude no more than 4" into walks or corridors. Objects projecting from walls with their leading edges at or below 27" above the finished floor may protrude any amount. Free standing objects mounted on posts or pylons may overhang 12" maximum from 27" to 80" above the finished floor or ground. Protruding objects shall not reduce the required clear width of an accessible route or maneuvering space.		

BOMA® INTERNATIONAL

ELEMENT 1: ACCESSIBLE ROUTE - EXTERIOR cont'd

Building: _____

Date Reviewed: _____

Reviewed by: _____

ADAAG SEC.	ITEM	TECHNICAL REQUIREMENTS	EXISTING CONDITION/NOTES	OK
4.1.3(4)	Stairs	Refer to Element 7: Stairs.		
4.1.2(6)	Toilet Facilities	Refer to Element 12: Toilet Rooms and Bathrooms.		

NOTES/SKETCHES:

ELEMENT 2: ACCESSIBLE PARKING

Building: _____
Date Reviewed: _____
Reviewed by: _____

Total Parking Spaces Provided	1 - 25	26 - 50	51 -75	76 - 100	101 - 150	151 - 200	201 - 300	301 - 400	401 - 500	501 - 1000	1001 & over
Minimum Number of Accessible Spaces Required	1	2	3	4	5	6	7	8	9	2% of total	20 plus 1 for each 100 over 1000
Minimum Number of Accessible Spaces Required to be 'Van Accessible' (See Note)	1	1	1	1	1	1	1	1	2	1 in every 8 accessible spaces	1 in every 8 accessible spaces

Note: Designated 'Van Accessible' spaces are not required if all accessible spaces comply with 'Universal Parking Design'

ADAAG SEC.	ITEM	TECHNICAL REQUIREMENTS	EXISTING CONDITION/NOTES	OK
4.1.2(5)(a)	Number required	If parking spaces are provided for self parking by employees or visitors, or both, then accessible spaces are required as indicated in the table above. Spaces required by the table need not be located in the same lot as other spaces. They may be provided in a different location if equivalent or greater accessibility, in terms of distance from an accessible entrance, cost and convenience, is ensured.	Total parking spaces provided:_____ Accessible spaces required:_____ Accessible spaces provided:_____	
4.1.2(5)(b)	Number required	One in every 8 accessible spaces, but at least one, shall be 'van accessible' as noted below. **Exception:** If all accessible spaces comply with 'Universal Parking Design,' as noted below, designated 'van accessible' spaces are not required.	'Van Accessible' spaces required:_____ 'Van Accessible' spaces provided:_____	
4.1.2(5)(d)	Number required	At medical care facilities providing care and other services for persons with mobility impairments, accessible parking spaces shall be provided as shown in the table above except as follows: **Outpatient units and facilities:** 10% of the total number of parking spaces serving the unit or facility shall be accessible. **Units and facilities specializing in treatment or services for persons with mobility impairments:** 20% of the total number of spaces serving the unit or facility shall be accessible.		
4.1.2(5)(c)	Passenger Loading Zones	If passenger loading zones are provided, at least one shall comply with this section.		

BOMA ®
INTERNATIONAL

ELEMENT 2: ACCESSIBLE PARKING cont'd

Building: _____
Date Reviewed: _____
Reviewed by: _____

ADAAG SEC.	ITEM	TECHNICAL REQUIREMENTS	EXISTING CONDITION/NOTES	OK
4.1.2(5)(e)	Valet Parking	Valet parking facilities shall provide a passenger loading zone complying with this section. Valet parking facilities are not required to provide accessible parking spaces. *(It is recommended that some accessible self parking spaces be provided, as some persons with disabilities have vehicles equipped with special controls which may not be operable by a parking attendant.)*		
4.6.2 4.1.2(5)(b)	Location	Accessible parking spaces serving a particular building shall be located on the shortest accessible route of travel from adjacent parking to an accessible building entrance. In buildings with multiple accessible entrances with adjacent parking, accessible parking spaces shall be dispersed and located closest to the accessible entrances. All van accessible spaces may be grouped on one level of a parking structure. *('Universal' spaces, when provided, may also be grouped on one level of a parking structure).* In parking facilities that do not serve a particular building, accessible parking shall be located on the shortest accessible route of travel to an accessible pedestrian entrance to the facility.		
4.1.2(5)(a) 4.6.3	'Standard' Accessible Spaces	Accessible spaces shall have the following minimum dimensions: Parking space width: 96" Access aisle width: 60" Vertical clearance: 80"		
4.1.2(5)(b) 4.6.5	'Van Accessible' Spaces	'Van accessible' spaces shall have the following minimum dimensions: Parking space width: 96" Access aisle width: 96" Vertical clearance: 98" *(at parking space and along at least one vehicular route to the space)*		
A4.6	'Universal' Accessible Spaces	'Universal' parking design spaces shall have the following minimum dimensions: Parking space width: 132" Access aisle width: 60" Vertical clearance: 98" *(at parking space and along at least one vehicular route to the space)*		
4.6.5 4.6.6	Passenger Loading Zones	Passenger loading zones shall have the following minimum dimensions: Vehicle pull up space width: *(not specified)* Access aisle width: 60" Access aisle length: 20' *(adjacent and parallel to vehicle space)* Vertical clearance: 114" *(at loading zone and along at least one vehicular route to the loading zone)*		

BOMA® INTERNATIONAL

ELEMENT 2: ACCESSIBLE PARKING cont'd.

Building: _____

Date Reviewed: _____

Reviewed by: _____

ADAAG SEC.	ITEM	TECHNICAL REQUIREMENTS	EXISTING CONDITION/NOTES	OK
4.6.3	Access Aisles	Parking access aisles shall be part of an accessible route to the building or facility entrance. Two accessible parking spaces may share a common access aisle. Parked vehicle overhangs shall not reduce the clear width of an accessible route.		
4.6.3 4.6.6	Slope	Parking spaces, passenger loading zones, and access aisles shall have a maximum slope of 1:50 *(2%)* in all directions. *(Curb ramps are not permitted within the required area of access aisles and loading zones.)*		
4.1.2 (7)(d) 4.6.4	Signage	Accessible parking spaces shall be designated as reserved by a sign showing the International Symbol of Accessibility. 'Van accessible' spaces shall have an additional sign stating 'Van-Accessible' below the symbol of accessibility. *(This additional sign is not required when all 'universal' accessible spaces are provided.)* Accessible passenger loading zones shall be identified by a sign showing the International Symbol of Accessibility. Signs shall be located so that they cannot be obscured by a vehicle parked in the space.		

NOTES/SKETCHES

BOMA ®
INTERNATIONAL

ELEMENT 3: CURB RAMPS

Building: _____
Date Reviewed: _____
Reviewed by: _____

ADAAG SEC.	ITEM	TECHNICAL REQUIREMENTS	EXISTING CONDITION/NOTES	OK
4.7.1	Where required	Wherever an accessible route crosses a curb.		
4.7.2 4.8.2 4.1.6 (3)(a)	Slope	Least possible slope shall be used. Maximum slope: 1:12 Transitions shall be flush and free of abrupt changes. Maximum slope of adjacent surfaces: 1:20. **Alterations / Existing Conditions:** Where space limitations prohibit use of 1:12 ramp, following slopes are acceptable: Max. rise of 6": 1:10 to 1:12 slope Max rise of 3": 1:8 to 1:10 slope Slope greater than 1:8 is prohibited.	Rise of ramp in inches:_____ Length *(run)* of ramp in inches:_____ *(Measure "length" in a horizontal plane, not along the surface of the ramp)* Slope of Ramp *(Rise: Run)*:_____	
4.7.3	Clear Width	Minimum: 36"	Ramp Width in inches:_____	
4.7.4 , 4.5	Surface	Shall be firm, stable, and slip-resistant.		
4.7.5	Sides	If located where pedestrians may walk across the ramp, the sides of the ramp shall be flared, with a maximum slope of 1:10. If the width of the walking surface at the top of the ramp is less than 48" wide, the flared sides shall have a maximum slope of 1:12. Returned curbs may be used only where pedestrians would not normally walk across the ramp.		
4.7.6	Built-up Curb Ramps	Shall be located so they do not project into traffic lanes.		
4.7.7 4.29.2	Detectable Warnings	Required for full width and depth of ramp. Surface shall consist of raised truncated domes with following features: Diameter: 0.9" nominal Height: 0.2" nominal Center to Center spacing: 2.35" nominal The surface shall contrast visually with adjoining surfaces The material providing contrast shall be an integral part of the walking surface		

BOMA INTERNATIONAL

ELEMENT 3: CURB RAMPS cont'd

Building: _____

Date Reviewed: _____

Reviewed by: _____

ADAAG SEC.	ITEM	TECHNICAL REQUIREMENTS	EXISTING CONDITION/NOTES	OK
4.7.8	Obstructions	Shall be located to prevent obstruction by parked vehicles.		
4.7.9	Location at Marked Crossings	If at marked crossing, shall be fully contained within marked area, excluding any flared sides.		
4.7.10	Diagonal Curb Ramps	With returned curb, must be parallel to pedestrian flow. If at marked crossing, minimum 48" wide area at bottom of ramp shall be contained within the marked crossing. If flared sides, at least 24" of straight curb required within crossing area.		
4.7.11	Islands	Any raised islands in crossing shall either be cut through level with the street, or shall have curb ramps each side, with a minimum 48" long level area between.		
4.8.5	Handrails	Not required for curb ramps.		

NOTES/SKETCHES

BOMA® INTERNATIONAL

ELEMENT 4: ENTRANCES

Building: _____

Date Reviewed: _____

Reviewed by: _____

ADAAG SEC.	ITEM	TECHNICAL REQUIREMENTS	EXISTING CONDITION/NOTES	OK
4.14.1 4.1.3(8)(a)(i) 4.1.3(8)(b)	Minimum number	**Note:** Public entrances are any entrances that are not loading or service entrances. At least 50% of public entrances must be accessible *(not including access from pedestrian tunnels, elevated walkways, or internal parking garages)*. At least one public entrance must be a ground floor entrance. It is preferable that all entrances be accessible.		
4.1.7(3)(b)	Minimum number	**Historic Preservation:** At least one accessible entrance complying with this section shall be provided. **Exception:** If it is determined that no entrance used by the public can comply, then access at any entrance not used by the general public but open (unlocked) with directional signage at the primary entrance may be used. The accessible entrance shall have a notification system. Where security is a problem, remote monitoring may be used.		
4.1.3(8)(a)(ii)	Minimum number	The number of accessible entrances shall be equivalent to the number of exits required by the applicable building/fire code. *(This does not require an increase in the planned number of entrances; ie., if a building with three entrances is planned, with 4 required exits, the 3 entrances shall be accessible, but a fourth entrance need not be added.)*		
4.1.3(8)(a)(iii)	Where required	An accessible entrance shall be provided to each tenancy in a facility *(e.g. individual stores in a strip shopping center)*.		
4.1.3(8)(b)(i)	Where required	If direct pedestrian access is provided into the building from an enclosed parking garage, at least one entrance from the garage to the building shall be accessible.		
4.1.3(8)(b)(ii)	Where required	If pedestrian access is provided from pedestrian tunnels or elevated walkways, at least one building entrance from each tunnel or walkway shall be accessible.		
4.1.3(8)(c)	Where required	If the only entrance to a building, or tenancy in a facility, is a service entrance, that entrance shall be accessible.		
4.1.3(8)(c)	Location	Where feasible, accessible entrances shall be the entrances used by the majority of people visiting or working in the building.		
4.1.6(1)(h)	Minimum number	**Alterations / Existing Conditions:** If alterations are undertaken on an existing entrance, and the building already has an accessible entrance, the entrance being altered need not be accessible, unless it affects the usability of, or a [illegible] an [illegible] [illegible] [illegible] [illegible]		

BOMA INTERNATIONAL

ELEMENT 4: ENTRANCES cont'd

Building: _____

Date Reviewed: _____

Reviewed by: _____

ADAAG SEC.	ITEM	TECHNICAL REQUIREMENTS	EXISTING CONDITION/NOTES	OK
4.1.2(7)(d) 4.1.3(8)(d) 4.1.6(1)(h) 4.30	Signage	When all entrances are not accessible, accessible entrances shall be identified by a sign showing the International Symbol of Accessibility. Entrances which are not accessible (including altered entrances which are not made accessible) shall have directional signage indicating the location of the nearest accessible entrance. This signage shall comply with the requirements for: Character Proportion Character Height Finish and Contrast *(Refer to **Element 16: Signage** for specific requirements.)* This signage shall be installed in a location which will prevent a person with a disability from having to retrace his approach route to the inaccessible entrance.		
4.1.3(7)(a)	Doors	At each accessible entrance, at least one door shall be accessible. *(Refer to **Element 10: Doors** for specific requirements.)*		

NOTES/SKETCHES

BOMA ®
INTERNATIONAL

ELEMENT 5: ACCESSIBLE ROUTE • INTERIOR

Building: _____
Date Reviewed: _____
Reviewed by: _____

ADAAG SEC.	ITEM	TECHNICAL REQUIREMENTS	EXISTING CONDITION/NOTES	OK
4.1.3(1)	Where required	At least one accessible route complying with this section shall connect accessible building or facility entrances with all accessible spaces and elements within the building or facility.		
4.3.2(4)	Where required	An accessible route shall connect at least one accessible entrance of each accessible dwelling unit with those exterior and interior spaces and facilities that serve the accessible dwelling unit.		
4.1.7(3)(b)	Where required	**Historic Preservation:** Accessible routes from an accessible entrance to all publicly used spaces on at least the level of the accessible entrance shall be provided. Access shall be provided to all levels of a building or facility whenever practical.		
4.1.3(5) 4.1.6(1)(k)(ii)	Where required	In multi-story buildings not required to have an elevator *(refer to Element 8: Elevators)*, floors located above and below the accessible ground floor entrance shall comply with other requirements of Elements 1-20. In existing multi-story buildings without an elevator, alterations to floors above and below the accessible ground floor shall comply with other requirements of Elements 1-20.		
4.3.3	Width	Minimum clear width: 36" *(except as allowed at doors)*.		
4.3.3	Width at Turns	36" clear width is permitted for a 90° turn if no additional turn is required within 48". Clear width with turns around on obstruction less than 48" wide shall be 42" minimum, with 48" minimum width at turn.		
4.3.4	Passing Space	If an accessible route is less than 60" wide, passing spaces are required at maximum 200' intervals. Passing space may be either a 60" X 60" space, or a T intersection of two walks or corridors.		
4.3.5 4.4.2	Headroom	Minimum clear headroom: 80" If vertical clearance of an area adjoining an accessible route is reduced to less than 80", a barrier shall be provided.		
4.3.7	Slope	Running slope shall not exceed 1:20 *(If slope exceeds 1:20, refer to 'ramps' section)* Cross slope shall not exceed 1:50 (2%).		

ADAAG SEC.	ITEM	TECHNICAL REQUIREMENTS	EXISTING CONDITION/NOTES	OK
4.3.8 4.5.2 4.1.6(1)(f)	Changes in Level	Up to 1/4": requires no edge treatment *(vertical edge permitted)*. 1/4" to 1/2": Edge shall be beveled with a slope no greater than 1:2. Greater than 1/2": Requires a ramp, elevator, or platform lift. Stairs shall not be part of an accessible route. **Alterations/Existing Conditions:** If an escalator or stair is added where none existed previously, and major structural modifications are necessary for such installation, then a means of accessible vertical access *(ramp, elevator, or platform lift)* shall be provided.		
4.3.6 4.5	Ground and Floor Surfaces	Shall be firm, stable, and slip-resistant. *(If gratings are used, refer to requirements under **Element 1: Accessible Route.**)*		
4.5.3	Carpet	If carpet is used, it shall have the following features: Shall be securely attached; A firm cushion, pad, or backing *(or none)*; A level loop, textured loop, level cut pile or level cut/uncut pile texture; Maximum pile thickness: 1/2"; Exposed edges fastened to floor surfaces with carpet edge trim.		
4.4.1	Protruding Objects	Objects projecting from walls with their leading edges between 27" and 80" above the finished floor shall protrude no more than 4" into walks or corridors. Objects projecting from walls with their leading edges at or below 27" above the finished floor may protrude any amount. Free-standing objects mounted on posts or pylons may overhang 12" maximum from 27" to 80" above the finished floor or ground. Protruding objects shall not reduce the required clear width of an accessible route or maneuvering space.		
4.2.4	Clear Floor Space	The minimum clear floor space required to accommodate a single, stationary wheelchair is 30" by 48", and may be positioned for either a forward or parallel approach. If a forward approached clear floor space extends more than 24" into an alcove, the minimum alcove width shall be 36". If a parallel approached clear floor space extends more than 15" into an alcove, the minimum alcove length shall be 60"		

BOMA® INTERNATIONAL

ELEMENT 5: ACCESSIBLE ROUTE - INTERIOR cont'd

Building: _____

Date Reviewed: _____

Reviewed by: _____

ADAAG SEC.	ITEM	TECHNICAL REQUIREMENTS	EXISTING CONDITION/NOTES	OK
4.2.5 4.2.6	Reach Ranges	If a clear floor space allows only a forward approach, the maximum high forward reach shall be 48". The minimum low forward reach shall be 15". If the high forward reach is over an obstruction, the following conditions shall be met: Knee space below obstruction shall equal or exceed reach length required above the obstruction. If the obstruction is less than 20" deep, the maximum high forward reach shall be 48". If the obstruction is 20-25" deep, the maximum high forward reach shall be 44". If a clear floor space allows a parallel approach, the maximum high side reach shall be 54". The minimum low side reach shall be 9". If the high side reach is over an obstruction, the following conditions shall be met: Obstruction shall be 34" maximum in height, 24" in depth, maximum high side reach shall be 46".		
4.1.3	Accessible Elements	Refer to separate sections for specific requirements for each of the following elements: **Element 7: Stairs** **Element 8: Elevators** **Element 9: Platform Lifts** **Element 10: Doors** **Element 11: Drinking Fountains** **Element 12: Toilet Rooms and Bathrooms** **Element 13: Assembly Areas** **Element 14: Storage** **Element 15: Alarms** **Element 16: Signage** **Element 17: Public Telephones** **Element 18: Seating and Tables** **Element 19: Automatic Teller Machines** **Element 20: Dressing and Fitting Rooms**		
4.1.3(13) 4.27	Controls and Operating Mechanisms	All controls and operating mechanisms in accessible spaces, along accessible routes, and as parts of accessible elements, shall comply with the following: 1. Clear floor space shall be provided to allow forward or parallel approach. 2. Heights of all operable portions shall comply with the reach ranges above. Electrical and communications system receptacles on walls shall be 15" minimum the ll		

Building: _____

Date Reviewed: _____

Reviewed by: _____

ADAAG SEC.	ITEM	TECHNICAL REQUIREMENTS	EXISTING CONDITION/NOTES	OK
4.1.3(13) 4.27 *(cont'd)*	Controls and Operating Mechanisms *(cont'd)*	**Exception:** The height requirements do not apply where the use of special equipment dictates otherwise or where electrical and communications systems receptacles are not normally intended for use by building occupants. 3. Controls and operating mechanisms shall be operable with one hand and shall not require tight grasping, pinching, or twisting of the wrist. 4. The force required to activate controls shall be no greater than 5 lbf.		
4.1.3(9) 4.1.6(1)(g) 4.3.10	Means of Egress	In buildings or facilities, or portions of buildings and facilities, required to be accessible, accessible means of egress shall be provided in the same number as required for exits by local building / life safety regulations. Accessible routes serving any space or element shall also serve as a means of egress for emergencies or connect to an accessible area of rescue assistance. Where a required exit from an occupiable level above or below a level of accessible exit discharge is not accessible, an area of rescue assistance shall be provided on each level *(in a number equal to that of inaccessible required exits)*. Areas of rescue assistance shall comply with requirements listed below. **Exception:** A horizontal exit, meeting the requirements of local building / life safety regulations, shall satisfy the requirement for an area of rescue assistance. **Exception:** Areas of rescue assistance are not required in buildings or facilities having a supervised automatic sprinkler system. **Alterations / Existing Conditions:** The requirements for accessible means of egress and areas of rescue assistance do not apply to alterations.		
4.3.11	Areas of Rescue Assistance	**Location and Construction:** An area of rescue assistance shall be one of the following: 1. A portion of a stairway landing within a smokeproof enclosure *(complying with local requirements)*. 2. A portion of an exterior exit balcony *(complying with local requirements)* located immediately adjacent to an exit stairway. Openings to the interior of the building located within 20' of the area of rescue assistance shall be protected with fire assemblies having a 3/4 hour fire protection rating. 3. A portion of a 1 hour fire-resistive corridor *(complying with local requirements)* located immediately adjacent to an exit enclosure. 4. A vestibule located immediately adjacent to an exit enclosure and constructed to the same fire resistive standards as required for corridors and openings.		

BOMA® INTERNATIONAL

ELEMENT 5: ACCESSIBLE ROUTE - INTERIOR cont'd

Building: _____

Date Reviewed: _____

Reviewed by: _____

ADAAG SEC.	ITEM	TECHNICAL REQUIREMENTS	EXISTING CONDITION/NOTES	OK
4.3.11 *(cont'd)*	Areas of Rescue Assistance *(cont'd)*	5. A portion of a stairway landing within an exit enclosure which is vented to the exterior and is separated from the interior of the building with not less than 1 hour fire resistive doors. 6. When approved by the appropriate local authority, an area or room which is separated from other portions of the building by a smoke barrier. Smoke barriers shall have a fire resistive rating of not less than 1 hour and shall completely enclose the area or room. Doors in the smoke barrier shall be tight-fitting smoke and draft control assemblies having a fire-protection rating of not less than 20 minutes and shall be self- or automatic-closing. The area or room shall be provided with an exit directly to an exit enclosure. Where the room or area exits into an exit enclosure which is required to be of more than 1 hour fire-resistive construction, the room or area shall have the same fire-resistive construction, including the same opening protection, as required for the adjacent exit enclosure. 7. An elevator lobby when elevator shafts and adjacent lobbies are pressurized as required for smokeproof enclosures by local regulations. Such pressurization system shall be activated by smoke detectors on each floor located in a manner approved by the local authority. Pressurization equipment and its ductwork shall be separated from other portions of the building by a minimum 2 hour fire-resistive construction. **Size:** Each area of rescue assistance shall provide a minimum of 2 accessible spaces each being not less than 30" by 48". These spaces shall not encroach on any required exit width. The total number of spaces per story shall not be less than 1 per 200 persons of calculated occupant load served by the area of rescue assistance. **Exception:** The local authority may reduce the minimum number of spaces to 1 for each area of rescue assistance on floors where the occupant load is less than 200. **Stairway Width:** Each stairway adjacent to an area of rescue assistance shall have a minimum clear width of 48" between handrails. **Two-way Communication:** A method of two-way communication, with both visible and audible signals, shall be provided between each area of rescue assistance and the primary building entry. The fire department or local authority may approve a location other than the primary entry. **Identification:** Each area of rescue assistance shall be identified by a sign which states "AREA OF RESCUE ASSISTANCE" and displays the International Symbol of Accessibility. The sign shall be illuminated when exit sign illumination is required. Signage shall also be installed at all inaccessible exits and where otherwise necessary to clearly indicate the direction to areas of rescue assistance. In each area of rescue assistance, instructions on the use of the area under emergency conditions shall be posted adjoining the two-way communication system.		

BOMA® INTERNATIONAL

ELEMENT 8: RAMPS

Building: _____

Date Reviewed: _____

Reviewed by: _____

ADAAG SEC.	ITEM	TECHNICAL REQUIREMENTS	EXISTING CONDITION/NOTES	OK
4.8.1	Where Required	Wherever the slope of the accessible route exceeds 1:20 *(5%)*.		
4.8.2 4.1.6(3)(a) 4.1.7(3)(a)	Slope	Least possible slope shall be used Maximum slope: 1:12 Transitions shall be flush and free of abrupt changes Maximum slope of adjacent surfaces: 1:20 **Alterations / Existing Conditions:** Where space limitations prohibit use of 1:12 ramp, following slopes are acceptable: Max. rise of 6": 1:10 to 1:12 slope Max rise of 3": 1:8 to 1:10 slope Slope greater than 1:8 is prohibited **Historic Preservation:** A ramp with a slope no greater than 1:6 for a run not to exceed 2' may be used as part of an accessible route to an entrance.	Rise of ramp in inches: _____ Length *(run)* of ramp in inches: _____ *(Measure "length" in a horizontal plane, not along the surface of the ramp)* Slope of Ramp *(Rise: Run)*: _____	
4.8.3	Clear Width	Minimum: 36".	Ramp width in inches: _____	
4.8.4	Landings	Level landings required at top and bottom of each run, with the following features: 1. Minimum Width: Equal to width of ramp. 2. Length: Minimum 60" clear. 3. If ramp changes direction at landing, landing shall be minimum 60" by 60". 4. If doorway is located at landing, maneuvering space is required *(refer to **Element 10: Doors.**)*		
4.8.5	Handrails	Required if: Rise exceeds 6" or Run *(horizontal projection)* exceeds 72".	Are handrails required? Yes or No_____ *(If no, skip to "Cross Slope" below)*	
4.8.5 (1)	Handrails	Shall be provided on both sides of ramps. Inside rail on switchback or dogleg ramps shall be continuous.		
4.8.5(2)	Handrails	Where not continuous, rails shall extend at least 12" beyond top and bottom of ramp, parallel to ground surface.		
4.8.5(3)	Handrails	Height: 34-38" above ramp surface.		
4.8.5(4)	Handrails	Clear floor space between rail and any wall shall be 1 1/2".		

BOMA® INTERNATIONAL

ELEMENT 6: RAMPS cont'd

Building: _____

Date Reviewed: _____

Reviewed by: _____

ADAAG SEC.	ITEM	TECHNICAL REQUIREMENTS	EXISTING CONDITION/NOTES	OK
4.8.6(5)	Handrails	Gripping surfaces shall be continuous *(uninterrupted)*.		
4.8.6(6)	Handrails	Ends shall be rounded, or returned smoothly to floor, wall, or post.		
4.8.6(7)	Handrails	Handrails shall not rotate in their fittings.		
4.26.2	Handrails	Diameter or width of gripping surface shall be 1-1/4" to 1-1/2", or shall provide an equivalent gripping surface.		
4.26.2	Handrails	May be located in a recess provided that the recess is 3" deep maximum and extends 18" minimum above the top of the handrail.		
4.26.4	Handrails	Rails and adjacent surfaces shall be free of abrasive or sharp elements. Edges shall have a minimum radius of 1/8".		
4.8.6	Cross Slope	Maximum cross slope of ramp surface shall be 1:50.		
4.8.6, 4.5	Surfaces	Ramp surface shall be firm, stable, and slip resistant. *(If carpeted, refer to requirements under **Element 5: Accessible Route**.)*		
4.8.7	Edge Protection	Ramps and landings with vertical side drop offs shall have walls, railings, projecting surfaces, or minimum 2" high curbs, to prevent people from slipping off the ramp.		
4.8.8	Outdoor Conditions	Outdoor ramps and their approaches shall be designed so that water will not accumulate on their walking surfaces.		

NOTES/SKETCHES:

BOMA® INTERNATIONAL

ELEMENT 7: STAIRS

Building: _____

Date Reviewed: _____

Reviewed by: _____

ADAAG SEC.	ITEM	TECHNICAL REQUIREMENTS	EXISTING CONDITION/NOTES	OK
4.1.3(4)	When applicable	Interior and exterior stairs connecting levels not served by an elevator, ramp, or other accessible means of vertical access shall comply with this section.		
4.1.6(1)(c)	When applicable	If stair modifications to correct unsafe conditions are required by other applicable codes, the modifications shall comply with this section.		
4.9.2	Treads and Risers	All steps on a flight of stairs shall have uniform riser heights and tread widths. Minimum tread depth shall be 11", measured from riser to riser *(not including nosing)*. Open risers are not permitted.		
4.9.3	Nosings	Undersides of nosings shall not be abrupt. Radius of curvature at leading tread edge shall not exceed 1/2". Risers shall be sloped or underside of nosing shall have an angle not less than 60°. Nosings shall project no more than 1-1/2".		
4.9.4	Handrails	Required at both sides of all stairs.		
4.9.4 (1)	Handrails	Inside rail on switchback or dogleg stairs shall be continuous.		
4.9.4(2) 4.1.6(3)(b)	Handrails	Where not continuous, handrail extensions shall be provided as follows: Top of stair flights: Parallel to floor, 12" minimum beyond top riser nosing. Bottom of stair flights: Continue sloping for one tread width beyond bottom riser, plus 12" minimum parallel to floor. **Alterations / Existing Conditions:** Full extensions are not required where they would be hazardous or impossible due to plan configuration.		
4.9.4(5)	Handrails	Height: 34"-38", measured from stair nosing.		
4.9.4(3)	Handrails	Clear floor space between rail and any wall shall be 1 1/2".		
4.9.4(4)	Handrails	Gripping surfaces shall be uninterrupted by newel posts, other construction elements, or obstructions.		

BOMA®

ELEMENT 7: STAIRS cont'd

Building: _____

Date Reviewed: _____

Reviewed by: _____

ADAAG SEC.	ITEM	TECHNICAL REQUIREMENTS	EXISTING CONDITION/NOTES	OK
4.9.4(6)	Handrails	Ends shall be rounded, or returned smoothly to floor, wall, or post.		
4.9.4(7)	Handrails	Handrails shall not rotate in their fittings.		
4.26.2	Handrails	Diameter or width of gripping surface shall be 1-1/4" to 1-1/2", or shall provide an equivalent gripping surface.		
4.26.2	Handrails	May be located in a recess provided that the recess is 3" deep maximum and extends 18" minimum above the top of the handrail.		
4.26.4	Handrails	Rails and adjacent surfaces shall be free of abrasive or sharp elements. Edges shall have a minimum radius of 1/8".		
4.9.5	Detectable Warnings	No detectable warnings required for stairs at this time.		
4.9.6	Outdoor Conditions	Outdoor stairs and their approaches shall be designed so that water will not accumulate on walking surfaces.		

NOTES/SKETCHES:

BOMA® INTERNATIONAL

ELEMENT 8: ELEVATORS

Note: Several of the elevator provisions are quite technical in nature. It may be preferable to have these items reviewed by a qualified elevator technician.

Building: _____

Date Reviewed: _____

Reviewed by: _____

ADAAG SEC.	ITEM	TECHNICAL REQUIREMENTS	EXISTING CONDITION/NOTES	OK
4.1.3(5) 4.1.6(1)(k)(i)	Where required	One passenger elevator complying with this section shall serve each level, including mezzanines, in all multi-story buildings and facilities. If more than one elevator is provided, each full passenger elevator shall comply with this section. **Exception 1:** Elevators are not required in buildings less than 3 stories in height or less than 3000 square feet per floor, unless the building is a shopping center, office of a professional health care provider, or a public transportation terminal. In new construction, if a building or facility is eligible for this exception, but a full passenger elevator is nonetheless planned, the elevator shall comply with this section and shall serve each level in the building. **Exception 2:** Elevator pits, elevator penthouses, mechanical rooms, piping or equipment catwalks are exempted from this requirement. **Exception 3:** Ramps *(complying with Element 6: Ramps)* may be used in lieu of an elevator. **Exception 4:** Platform lifts *(complying with Element 9: Platform Lifts)* may be used in lieu of an elevator. **Alterations / Existing Conditions:** **Exception:** An elevator is not required in an altered building less than 3 stories in height or 3000 square feet per floor, unless the building is a shopping center, office of a professional health care provider, or a public transportation terminal.		
4.10.1	General	Elevators shall comply with *ASME /ANSI A17.1-1990, Safety Code for Elevators and Escalators*. Freight elevators shall not be considered as meeting the requirements of this section unless the only elevators provided are used as combination passenger and freight elevators for the public and employees.		
4.10.2	Automatic Operation	Elevator operation shall be automatic. Each car shall have a self leveling feature that will automatically bring the car to floor landing within a tolerance of 1/2" under rated loading and zero loading conditions. This self leveling feature shall be automatic and independent of the operating device and shall correct for undertravel and overtravel.		
4.10.3	Hall Call Buttons	Shall be centered at 42" above floor. Shall have visual signals to indicate when call is registered and answered Minimum size: 3/4" in the smallest dimension "UP" button shall be above "DOWN" button		

Building: _____

Date Reviewed: _____

Reviewed by: _____

ADAAG SEC.	ITEM	TECHNICAL REQUIREMENTS	EXISTING CONDITION/NOTES	OK
4.10.3 *(cont'd)*	Hall Call Buttons *(cont'd)*	Buttons shall be raised or flush. Objects mounted beneath buttons shall not project more than 4" from the wall.		
4.10.4	Hall Lanterns	A visible and audible signal shall be provided at each hoistway entrance to indicate which car is answering a call. Audible signals shall sound once for "up", twice for "down", or shall have verbal annunciators that say "up" or "down." Visible signals shall have the following features: 1. Fixtures shall be mounted with centerline at least 72" above the lobby floor. 2. Visual elements shall be at least 2-1/2" in the smallest dimension. 3. Signals shall be visible from the vicinity of the hall call button. In-car lanterns, conforming with the above requirements, shall be acceptable.		
4.10.5 4.30.4	Characters on Hoistway Entrances	All elevator hoistway entrances shall have raised and Braille floor designations provided on both jambs. Characters shall be centered 60" above finish floor. Characters shall be 2" high, raised 1/32", upper case, sans serif or simple serif type, and shall be accompanied by Grade 2 Braille.		
4.10.6 4.1.6(3)(l)	Door Protective and Reopening Device	Elevator doors shall open and close automatically. Doors shall have a reopening device that will stop and reopen a car door if the door becomes obstructed by an object or person. The device shall be capable of completing these operations without requiring contact for an obstruction passing through the opening at heights of 5" and 29" above finish floor. Door reopening device shall remain effective for at least 20 seconds. After such interval, doors may close in accordance with *ASME/ANSI A17.1-1990*. **Alterations / Existing Conditions:** If safety door edges are provided in existing automatic elevators, automatic door reopening devices may be omitted.		
4.10.7	Door and Signal Timing for Hall Calls	The minimum acceptable time from notification that a car is answering a call until doors begin to close shall be calculated as follows: T=D/(1.5 ft/s) or T=D/(445 mm/s) T= time in seconds.		

ADAAG SEC.	ITEM	TECHNICAL REQUIREMENTS	EXISTING CONDITION/NOTES	OK
4.10.7 *(cont'd)*	Door and Signal Timing for Hall Calls	D= distance (in ft or mm) from point 60" directly in front of farthest call button to centerline of hoistway door. The minimum acceptable notification time shall be 5 seconds.		
4.10.8	Door Delay for Car Calls	The minimum time for elevator doors to remain fully open in response to a call shall be 3 seconds.		
4.10.9 4.1.6(3)(ii)	Floor Plan of Elevator Cars	Shall provide space for wheelchair users to enter the car, maneuver within reach of controls, and exit the car. Doors shall provide 36" clear minimum. Cab depth: 51" minimum, with 54" minimum from rear of cab to inside face of door. Cab width. side opening door - 68" minimum; Center opening door - 80" minimum. Clearance between car platform sill and edge of hoistway landing shall be 1-1/4" maximum. **Alterations / Existing Conditions:** Where existing plan configuration or technical infeasibility prevent use of specified cab sizes, dimensions may be reduced as required. However, in no case shall the inside car dimensions be less than 48" by 48". Equivalent facilitation may be provided with a cab of different size when usability can be demonstrated and when all other items required to be accessible comply with this section.		
4.10.10 4.5	Floor Surfaces	Shall be firm, stable, and slip-resistant. If carpet is used, it shall have the following features: Shall be securely attached; A firm cushion, pad, or backing *(or none)*; A level loop, textured loop, level cut pile or level cut/uncut pile texture; Maximum pile thickness: 1/2" Exposed edges fastened to floor surfaces with carpet edge trim.		
4.10.11	Illumination Levels	Illumination level at controls, platform and threshold and landing shall be minimum 5 footcandles.		
4.10.12(1)	Car Controls: Buttons	Size: 3/4" minimum in least dimension. Buttons shall be raised or flush.		

Building: _____

Date Reviewed: _____

Reviewed by: _____

ADAAG SEC.	ITEM	TECHNICAL REQUIREMENTS	EXISTING CONDITION/NOTES	OK
4.10.12(2)	Car Controls: Control Indicators	All control buttons shall be designated by Braille and by raised standard alphabet characters for letters, arabic symbols for numerals, or standard symbols as required in *ASME/ANSI A17.1-1990*. Characters shall be 5/8" to 2" high, raised 1/32", upper case, sans serif or simple serif type, and shall be accompanied by Grade 2 Braille. All raised designations shall be immediately left of the button to which they apply. Floor buttons shall be provided with visual signals which light when each call is registered and extinguish when each call is answered.		
4.10.12(3)	Car Controls: Height	All floor buttons shall be maximum 54" above floor where side approach is provided, 48" maximum where forward approach is required. Emergency controls *(including alarm and stop)* shall be grouped at bottom of panel, with centerlines 35" minimum above floor.		
4.10.12(4)	Car Controls: Location	Controls shall be located on a front wall if cars have center opening doors, and at either a side wall or the front wall if cars have side opening doors.		
4.10.13	Car Position Indicators	A visual car position indicator shall be provided above the car control panel or above the door. As the car passes or stops at a floor, the corresponding numbers shall illuminate and an audible signal shall sound. Numerals shall be a minimum 1/2" high. Audible signal shall be no less than 20 decibels with frequency no higher than 1500 Hz. An automatic verbal announcement of the floor number may be substituted for the audible signal.		
4.10.14	Emergency Communications	If provided, emergency two-way communication systems between the elevator and a point outside the hoistway shall comply with *ASME/ANSI A17.1-1990*. Highest operable part of system shall be maximum 48" from floor. System shall be identified by raised symbol and lettering located adjacent to the device. Characters shall be 5/8" to 2" high, raised 1/32", upper case, sans serif or simple serif type, and shall be accompanied by Grade 2 Braille. If system uses a handset, minimum cord length shall be 29". If located in a closed compartment, door shall be operable with one hand, shall not require tight grasping, pinching, or twisting of the wrist, and shall require a maximum force of 5 lbf. The emergency communication system shall not require voice communication *(Voice only system is inaccessible to persons with speech or hearing impairments.)*		

Building: _____

Date Reviewed: _____

Reviewed by: _____

ADAAG SEC.	ITEM	TECHNICAL REQUIREMENTS	EXISTING CONDITION/NOTES	OK
4.10.12(2)	Car Controls: Control Indicators	All control buttons shall be designated by Braille and by raised standard alphabet characters for letters, arabic symbols for numerals, or standard symbols as required in *ASME/ANSI A17.1-1990*. Characters shall be 5/8" to 2" high, raised 1/32", upper case, sans serif or simple serif type, and shall be accompanied by Grade 2 Braille. All raised designations shall be immediately left of the button to which they apply. Floor buttons shall be provided with visual signals which light when each call is registered and extinguish when each call is answered.		
4.10.12(3)	Car Controls: Height	All floor buttons shall be maximum 54" above floor where side approach is provided, 48" maximum where forward approach is required. Emergency controls *(including alarm and stop)* shall be grouped at bottom of panel, with centerlines 35" minimum above floor.		
4.10.12(4)	Car Controls: Location	Controls shall be located on a front wall if cars have center opening doors, and at either a side wall or the front wall if cars have side opening doors.		
4.10.13	Car Position Indicators	A visual car position indicator shall be provided above the car control panel or above the door. As the car passes or stops at a floor, the corresponding numbers shall illuminate and an audible signal shall sound. Numerals shall be a minimum 1/2" high. Audible signal shall be no less than 20 decibels with frequency no higher than 1500 Hz. An automatic verbal announcement of the floor number may be substituted for the audible signal.		
4.10.14	Emergency Communications	If provided, emergency two-way communication systems between the elevator and a point outside the hoistway shall comply with *ASME/ANSI A17.1-1990*. Highest operable part of system shall be maximum 48" from floor. System shall be identified by raised symbol and lettering located adjacent to the device. Characters shall be 5/8" to 2" high, raised 1/32", upper case, sans serif or simple serif type, and shall be accompanied by Grade 2 Braille. If system uses a handset, minimum cord length shall be 29". If located in a closed compartment, door shall be operable with one hand, shall not require tight grasping, pinching, or twisting of the wrist, and shall require a maximum force of 5 lbf. The emergency communication system shall not require voice communication *(Voice only system is inaccessible to persons with speech or hearing impairments.)*		

ADAAG SEC.	ITEM	TECHNICAL REQUIREMENTS	EXISTING CONDITION/NOTES	OK
4.1.3(5) Excep. 4 4.1.6(3)(g)	[illegible]	Platform lifts complying with this section and all applicable state and local codes are permitted only under the following conditions: a. To provide an accessible route to a performing area in an assembly occupancy. b. To comply with wheelchair viewing position line of sight and dispersion requirements. c. To provide access to incidental occupiable spaces which are not open to the general public and which house no more than five persons (ie. equipment control rooms, projection booths). d. To provide access where existing site constraints or other constraints make use of a ramp or an elevator infeasible. **Alterations / Existing Conditions:** Platform lifts complying with this section and all applicable state or local codes may be used as part of an accessible routes. *(Alterations are not limited to only the four conditions listed above.)*		
4.11.2	Other Requirements	Platform lifts shall comply with *ASME/ANSI A17.1 Safety Code for Elevators and Escalators, Section XX, 1990.*		
4.11.3	Entrance	Lifts shall facilitate unassisted entry, operation, and exit.		
4.2.4.1	Clear Floor Space	Minimum 30" by 48" space is required for a single wheelchair.		
4.2.4.2	Maneuvering Clearance	The platform lift shall provide maneuvering clearances as required for alcoves on the accessible route.		
4.5.1	Floor Surface	Shall be stable, firm, and slip-resistant. *(If carpeted, refer to requirements under **Element 5: Accessible Route**.)*		
4.11.2 4.27.2	Controls and Operating Mechanisms	Clear floor space allowing a proper forward or parallel wheelchair approach to all controls is required.		
4.11.2 4.27.3	Controls and Operating Mechanisms	Heights permitted: Forward reach: minimum 15", maximum 48" Side reach: minimum 9", maximum 54".		

Bui..... _____
Date Reviewed: _____
Reviewed by: _____

ADAAG SEC.	ITEM	TECHNICAL REQUIREMENTS	EXISTING CONDITION/NOTES	OK
4.11.2 4.27.3 *(cont'd)*	Controls and Operating Mechanisms *(cont'd)*	*(If reach is over an obstruction, refer to requirements under **Element 5: Accessible Route**.)*		
4.11.2 4.27.4	Controls and Operating Mechanisms	1. Shall be operable with one hand. 2. Shall not require tight grasping, pinching, or twisting of the wrist. 3. Maximum force required to activate controls shall be 5 lbf.		

NOTES/SKETCHES:

Date Reviewed: _____

Reviewed by: _____

ADAAG SEC.	ITEM	TECHNICAL REQUIREMENTS	EXISTING CONDITION/NOTES	OK
4.1.3(7)(a)	Where applicable	At each accessible entrance to a building or facility, at least one door shall comply with this section.		
4.1.3(7)(b)	Where applicable	Within a building or facility, at least one door at each accessible space shall comply with this section.		
4.1.3(7)(c)	Where applicable	Each door that is an element of an accessible route shall comply with this section.		
4.1.3(7)(d) 4.1.6(1)(g)	Where applicable	Each door serving as part of an accessible means of egress or connecting to an area of rescue assistance shall comply with this section. **Exception:** This requirement does not apply to existing buildings or alterations.		
4.13.2	Revolving Doors and Turnstiles	Revolving doors or turnstiles shall not be the only means of passage at an accessible entrance or along an accessible route. An accessible gate or door shall be provided adjacent to the turnstile or revolving door and shall facilitate the same use pattern.		
4.13.3	Gates	Gates, including ticket gates, shall comply with all applicable portions of this section.		
4.13.4	Double-leaf Doorways	If doorways have two independently operated door leaves, then at least one leaf shall comply with this section. That leaf shall be an active leaf.		
4.13.5 4.3.3 4.1.6(3)(d)(i)	Clear Width	Doorways shall provide a clear opening of 32" minimum, with the door open 90°. Clear opening shall be measured between the face of the door and stop. Openings more than 24" in depth shall provide a clear opening of 36" minimum. **Exception:** Doors not requiring full user passage, such as shallow closets, shall have a clear opening of 20" minimum. **Alterations/ Existing Conditions:** Where it is technically infeasible to comply with clear opening requirements, a maximum projection of 5/8" shall be permitted for the latch side stop *(reducing the required clear opening to 31-3/8" minimum)*.		

Building: _____

Date Reviewed: _____

Reviewed by: _____

ADAAG SEC.	ITEM	TECHNICAL REQUIREMENTS	EXISTING CONDITION/NOTES	OK
4.13.6 *(cont'd)*	Maneuvering Clearances *(cont'd)*	The following maneuvering clearances, in addition to doorway width, are required at swinging doors that are not automatic or power-assisted *(all dimensions are minimum)*: 1. Front approach to pull side: 18" beyond latch side of door, 60" perpendicular to doorway. 2. Front approach to push side, if door has a closer and a latch: 12" beyond latch side of door, 48" perpendicular to doorway. 3. Front approach to push side, without closer and latch: same width as doorway, 48" perpendicular to doorway. 4. Hinge side approach to pull side: 36" beyond latch side of door, 60" perpendicular to doorway; or 42" beyond latch side of door, 54" perpendicular to doorway. 5. Hinge side approach to push side, if door has a closer and a latch: 54" parallel to doorway *(from latch side, extending beyond hinge side)*, 48" perpendicular to doorway. 6. Hinge side approach to push side, without closer and latch: 54" parallel to doorway *(from latch side, extending beyond hinge side)*, 42" perpendicular to doorway. 7. Latch side approach to pull side, if door has closer: 24" beyond latch side of door, 54" perpendicular to doorway. 8. Latch side approach to pull side, without closer: 24" beyond latch side of door, 48" perpendicular to doorway. 9. Latch side approach to push side, if door has closer: 24" beyond latch side of door, 48" perpendicular to doorway. 10. Latch side approach to push side, without closer: 24" beyond latch side of door, 42" perpendicular to doorway. The following maneuvering clearances, in addition to doorway width, are required at sliding and folding doors that are not automatic or power-assisted *(all dimensions are minimum)*: 1. Front approach: same width as doorway, 48" perpendicular to doorway. 2. Slide side approach: 54" parallel to doorway *(from latch side, extending beyond slide side)*, 42" perpendicular to doorway. 3. Latch side approach: 24" beyond latch side of door, 42" perpendicular to doorway. The floor or ground area within the required clearances shall be level and clear. **Exception:** Entry doors to acute care hospital bedrooms for in patients are exempt from the latch side extensions if the door is at least 44" wide.		
4.13.7	Two Doors In Series	The minimum space between two hinged or pivoted doors in series shall be 48" plus the width of any door swinging into the space. Doors in series shall swing either in the same direction or away from the space between the doors.		

ADAAG SEC.	ITEM	TECHNICAL REQUIREMENTS	EXISTING CONDITION/NOTES	OK
4.13.8 4.1.63) (d); (ii)	Thresholds at Doorways	Maximum threshold height: 1/2" *(3/4" at exterior sliding doors).* Raised thresholds and floor level changes shall be beveled with a slope no greater than 1:2. **Alterations / Existing Conditions:** If existing thresholds are 3/4" high maximum, and have *(or are modified to have)* a beveled edge on each side, they may remain.		
4.13.8	Door Hardware	Handles, pulls, latches, locks, and other operating devices shall have a shape that is easy to grasp with one hand and does not require tight grasping, tight pinching, or twisting of the wrist to operate. Lever-operated mechanisms, push-type mechanisms, and U shaped handles are acceptable designs. When sliding doors are fully open, operating hardware shall be exposed and usable from both sides. Hardware required for passage shall be mounted no higher than 48" above finished floor.		
4.13.10	Door Closers	If a door has a closer, then the sweep period of the closer shall be adjusted so that from an open position of 70°, the door will take at least 3 seconds to move to a point 3" from the latch, measured to the leading edge of the door.		
4.13.11	Door Opening Force	The maximum force for pushing or pulling open a door shall be as follows: 1. Fire doors shall have the minimum opening force allowable by the appropriate administrative authority. 2. Other doors a. Exterior hinged doors: (No requirement at this time) b. Interior hinged doors: 5 lbf c. Sliding or folding doors: 5 lbf These forces do not apply to the force required to retract latch bolts or disengage other devices that may hold the door in a closed position.		
4.13.12	Automatic Doors and Power-Assisted Doors	If an automatic door is used, then it shall comply with *ANSI/BHMA A156.10-1985.* Slowly opening, low-powered, automatic doors shall comply with *ANSI A156.19-1984.* Such doors shall not open to back check faster than 3 seconds and shall require no more than 15 lbf to stop door movement. If a power assisted door is used, its door opening force shall comply with forces listed above *(see 'Door Opening Force')* and its closing force shall comply with *ANSI A156.19-1984.*		

BOMA®

ELEMENT 11 • DRINKING FOUNTAINS

Building: _____

Date Reviewed: _____

Reviewed by: _____

ADAAG SEC.	ITEM	TECHNICAL REQUIREMENTS	EXISTING CONDITION/NOTES	OK
4.1.3(10)(a)	Where Applicable	Where only one drinking fountain or water cooler is provided per floor, accessible drinking facilities shall be provided for both wheelchair users and for persons who have difficulty stooping or bending. This may be accomplished by the following means: Providing a "hi-lo" fountain, with spouts at wheelchair and standard height; Providing an accessible drinking fountain complying with this section and a water cooler; By other means providing accessibility for each group.	Number of fountains per floor: _____ Number of accessible fountains required: _____ Number of accessible fountains provided: _____	
4.1.3(10)(b) 4.1.3(10)(b)	Where Required	If more than one drinking fountain or water cooler is provided on a floor, 50% of those provided shall comply with this section and shall be located on an accessible route. *(If an odd number of fountains is provided, the 50% figure can be rounded down to determine the required number of accessible fountains.)*		
4.15.2	Spout Height	Spouts shall be no higher than 36", measured from the floor or ground surface to the spout outlet		
4.15.3	Spout Location	Spouts shall be located at the front of the unit and shall direct the water flow in a trajectory that is parallel or nearly parallel to the front of the unit. The spout shall provide a flow of water at least 4" high. If the fountain has a round or oval bowl, the spout must be positioned so the flow of water is within 3" of the front edge of the fountain.		
4.15.4	Controls	Unit controls shall be front mounted or side mounted near the front edge.		
4.27.4	Operation	Controls shall be operable with one hand and shall not require tight grasping, pinching, or twisting of the wrist. The force required to activate controls shall be no greater than 5 lbf.		
4.15.5	Clearances	1. Wall and post mounted cantilevered fountains shall have clear knee space as follows: minimum 27" high *(from apron bottom to floor)*, minimum 30" wide, and 17"-19" deep. A minimum 30" by 48" clear floor space allowing a forward approach to the unit shall also be provided. 2. Free-standing or built in units not having a clear knee space shall have a minimum 30" by 48" clear floor space allowing a parallel approach to the unit		

Date Reviewed: _____

Reviewed by: _____

ADAAG SEC.	ITEM	TECHNICAL REQUIREMENTS	EXISTING CONDITION/NOTES	OK
4.1.2(6)	Where required	If toilet facilities are provided on a site, then each such public or common use toilet facility shall comply with this section. If bathing facilities are provided on a site, then each such public or common use bathing facility shall comply with this section. For single user portable toilet or bathing units clustered at a single location, at least 5%, but not less than 1 toilet unit or bathing unit shall be provided at each cluster. Accessible units shall be identified by the International Symbol of Accessibility. **Exception:** Portable toilet facilities at construction sites used exclusively by construction personnel are not required to comply.		
4.1.3(11) 4.1.6(3)(e) 4.1.7(3)(c)	Where required	If toilet rooms are provided, then each public or common use toilet room shall comply with this section. Other toilet rooms provided for the specific use of occupants of specific spaces *(e.g. a private toilet room for a private office)* shall be adaptable. *(Room will need to be capable of complying with this section.)* If bathing rooms are provided, then each such public and common use bathroom shall comply with this section. **Alterations / Existing Conditions:** Where it is technically infeasible to comply with this section, the installation of at least one unisex toilet/bathroom per floor, located in the same area as existing toilet facilities, will be permitted in lieu of modifying existing toilet facilities. Each unisex toilet room shall contain one accessible water closet and one accessible lavatory *(Refer to **Elements 12.1: Water closets** and **12.4: Lavatories and Mirrors**)*, and the door shall have a privacy latch. **Historic Preservation:** If toilets are provided, then at least 1 toilet facility complying with this section shall be provided. The toilet facility may be unisex in design.		
4.22.1	Location	Accessible toilet rooms and bathrooms shall be on an accessible route.		
4.22.2 4.23.2	Doors	Doors to accessible toilet /bathrooms shall be accessible *(Refer to **Element 10: Doors**)*. Doors shall not swing into the clear floor space required for any fixture.		

uilding: _____
Date Reviewed: _____
Reviewed by: _____

ADAAG SEC.	ITEM	TECHNICAL REQUIREMENTS	EXISTING CONDITION/NOTES	OK
4.22.3 4.23.3	Clear Floor Space	All accessible fixtures and controls shall be on an accessible route. An unobstructed turning space is required within the toilet/bathroom. This space shall be either a 60" diameter circle or a T-shaped space, 60" square, with 36" legs. The clear space at fixtures and controls, the accessible route, and the turning space may overlap.		
4.1.2(7)(d) 4.1.6(3)(e)(iii)	Signage	Where all toilet and bathrooms are not accessible, accessible toilet and bathrooms shall be identified by a sign showing the International Symbol of Accessibility. **Alterations / Existing Conditions:** When existing toilet and bathrooms are being altered and are not made accessible, signage indicating location of nearest accessible toilet room within the facility shall be provided. Signage shall comply with requirements for: Character Proportion Character Height Finish and Contrast Symbols of Accessibility Refer to **Element 16: Signage** for specific requirements.		
4.23.7	Controls and Dispensers	If controls, dispensers, receptacles, or other equipment are provided, then at least one of each type shall be on an accessible route and shall comply with the height, clear floor space, and operation requirements specified in **Element 5: Accessible Route.**		
4.22 4.23	Accessible Elements	Refer to separate sections for specific requirements for each of the following elements: **Element 12.1: Water Closets** **Element 12.2: Toilet Stalls** **Element 12.3: Urinals** **Element 12.4: Lavatories and Mirrors** **Element 12.5: Sinks** **Element 12.6: Bathtubs** **Element 12.7: Shower Stalls** **Element 12.8: Grab Bars** **Element 12.9: Tub/Shower Seats.**		

ADAAG SEC.	ITEM	TECHNICAL REQUIREMENTS	EXISTING CONDITION/NOTES	OK
4.22.4 4.23.4	Number required	If water closets are not located in toilet stalls, at least one shall comply with this section.		
4.16.2	Clear Floor Space	Water closets shall be located 18" from a side wall or partition. Clear floor space for water closets not located in toilet stalls is required as follows, depending on approach provided to the fixture *(all dimensions are minimum)*: 1. Front approach: 66" from back wall, 48" from side wall *(lavatory may protrude 12" maximum into clear space along back wall)*. 2. Side approach: 56" from back wall, 48" from side wall *(lavatory may protrude 12" maximum into clear space along back wall)*. 3. Front and Side approach: 56" from back wall, 60" from side wall *(lavatory may not protrude into clear space)*. Clear floor space may be arranged to allow either a left handed or right handed approach.		
4.16.3	Height	The height to the top of the toilet seat shall be 17" to 19". Seats shall not be sprung to return to a lifted position.		
4.16.4 4.26.	Grab Bars.	For water closets not located in toilet stalls, the following grab bars shall be provided, 33-36" above the finish floor: Side Wall: 42" long minimum, 12" from back wall. Back Wall: 36" long minimum, 12" minimum each side of water closet centerline. Refer to **Element 12.8: Grab Bars** for size and structural requirements.		
4.16.5 4.27.4	Flush Controls	Controls shall be 44" maximum above the finish floor. Controls for flush valves shall be mounted on the wide side of toilet areas. Controls shall be hand operated or automatic. Controls shall be operable with one hand and shall not require tight grasping, pinching, or twisting of the wrist. The force required to activate controls shall be no greater than 5 lbf.		
4.16.6	Dispensers	Toilet paper dispensers shall be installed on the side wall, below the grab bar, a minimum 19" above the floor, and a maximum 36" from the rear wall. Dispensers that control delivery, or do not permit continuous paper flow, shall not be used.		

BOMA®

ELEMENT 12.2: TOILET STALLS

Building: _____
Date Reviewed: _____
Reviewed by: _____

ADAAG SEC.	ITEM	TECHNICAL REQUIREMENTS	EXISTING CONDITION/NOTES	OK
4.22.4	Where Applicable	If toilet stalls are provided in a toilet room or bathroom, then at least one shall be a 'standard' accessible toilet stall *(for wheelchair users)* complying with this section. If 6 or more toilet stalls are provided in a toilet room or bathroom, in addition to the 'standard' accessible stall required; an additional 'alternate A' accessible stall *(for ambulatory persons with disabilities)* complying with this section shall be provided. **Alterations / Existing Conditions:** In alteration work, where provision of a 'standard' accessible stall is technically infeasible, or where plumbing code requirements prevent combining existing stalls to provide space, either 'alternate' stall *(A or B)* complying with this section may be provided in lieu of the standard stall.		
4.17.2	Water Closets	Water closets located within toilet stalls shall comply with **Element 12.1: Water Closets**.		
4.17.3	Size and Arrangement	Toilet stalls may be arranged to provide either a left- or a right hand approach. Accessible toilet stalls shall have the following dimensions: **'Standard' Accessible Stall** Minimum Width: 60" Minimum Depth, with floor mounted water closet: 59" Minimum Depth, with wall mounted water closet: 56" Door: Outward swinging *(if door swings into stall, depth shall be increased by 36")* **'Alternate A' Accessible Stall** *(required when more than 6 stalls provided; permitted in lieu of 'standard' stalls in certain alterations)*. Width: 36" Minimum Depth: with floor mounted water closet: 69" Minimum Depth, with wall mounted water closet: 66" Door: Outward swinging **'Alternate B' Accessible Stall** *(permitted in lieu of standard stall only in certain alterations)* Minimum Width: 48" Minimum Depth: 54" Door: Outward Swinging		
4.17.4	Toe Clearances	In 'standard' accessible stalls, the front partition and at least one side partition shall provide a toe clearance of at least 9" above the floor. If the depth of the stall is greater than 60", the toe clearance is not required		

Date Reviewed: .....
Reviewed by: .....

ADAAG SEC.	ITEM	TECHNICAL REQUIREMENTS	EXISTING CONDITION/NOTES	OK
4.17.5	Doors	Toilet stall doors, including hardware, shall comply with **Element 10: Doors**. If toilet stall approach is from the latch side of the stall door, clearance between the door side of the stall and any obstruction shall be 42" minimum. *(This is an exception from typical door maneuvering clearances).*		
4.17.6	Grab Bars	Grab Bars, mounted 33"-36" above the floor, shall be provided as follows: **'Standard' Accessible Stall:** One 40" side wall grab bar *(on near wall)*, one rear wall grab bar. **'Alternate A' Accessible Stall:** 42" side wall grab bar each side. **'Alternate B' Accessible Stall:** One 42" side wall grab bar *(on near wall)*, one rear wall grab bar. **Side Wall Grab Bar:** Minimum length as indicated, mounted 12" maximum off rear wall. **Rear Wall Grab Bar:** Minimum length 36", 12" minimum each side of water closet centerline. Refer to **Element 12.8: Grab Bars** for size and structural requirements.		

NOTES/SKETCHES:

BOMA®

ELEMENT 12.3: URINALS

Building: _____

Date Reviewed: _____

Reviewed by: _____

ADAAG SEC.	ITEM	TECHNICAL REQUIREMENTS	EXISTING CONDITION/NOTES	OK
4.22.5 4.23.5	Number Required	If urinals are provided, then at least one shall comply with this section.		
4.18.2	Height	Urinals shall be stall-type or wall hung with an elongated rim at 17" maximum above the finish floor.		
4.18.3	Clear Floor Space	A clear space 30" wide by 48" deep minimum shall be provided in front of urinal to allow a forward approach. This space shall adjoin or overlap an accessible route. Urinal shields that do not extend beyond the front edge of the urinal rim may be provided with 29" clearance between them.		
4.18.4	Flush Controls	Controls shall be 44" maximum above the finished floor. Controls shall be hand operated or automatic. Controls shall be operable with one hand and shall not require tight grasping, pinching, or twisting of the wrist. The force required to activate controls shall be no greater than 5 lbf.		

NOTES/SKETCHES:

ADAAG SEC.	ITEM	TECHNICAL REQUIREMENTS	EXISTING CONDITION/NOTES	OK
4.22.6 4.23.6	Number required	If lavatories and mirrors are provided, then at least one shall comply with this section.		
4.19.1	General	The requirements of this section shall apply to lavatory fixtures, vanities, and built in lavatories.		
4.19.2	Height and Clearances	Lavatories shall be mounted with the rim or counter surface no higher than 34" above the finish floor. Lavatories shall extend 17" minimum from the wall. Clearance of 29" minimum shall be provided from finish floor to bottom of apron. Knee clearance of 27" minimum shall extend 8" minimum under the edge of the lavatory. Toe clearance of 9" minimum shall be provided for the full depth of the lavatory.		
4.19.3	Clear Floor Space	A clear floor space 30" by 48" shall be provided in front of a lavatory to allow forward approach. The clear floor space shall adjoin or overlap an accessible route and shall extend a maximum of 19" underneath the lavatory.		
4.19.4	Exposed Pipes and Surfaces	Hot water and drain pipes under lavatories shall be insulated or otherwise configured to protect against contact. There shall be no sharp or abrasive surfaces under lavatories.		
4.19.5 4.27.4	Faucets	Controls shall be operable with one hand and shall not require tight grasping, pinching, or twisting of the wrist. The force required to activate controls shall be no greater than 5 lbf. Lever-operated, push-type, and electronically controlled mechanisms are examples of acceptable designs. If self-closing valves are used the faucet shall remain open for at least 10 seconds.		
4.19.6	Mirrors	Mirrors shall be mounted with the bottom edge of the reflecting surface 40" maximum above the finish floor.		
4.23.9	Medicine Cabinets	If medicine cabinets are provided, at least one shall be located with a usable shelf no higher than 44" above the floor.		

BOMA®

ELEMENT 12.5: SINKS

Building: _____

Date Reviewed: _____

Reviewed by: _____

ADAAG SEC.	ITEM	TECHNICAL REQUIREMENTS	EXISTING CONDITION/NOTES	OK
4.24.1	Number Required	If sinks are provided, then at least one shall comply with this section. *(Note: Sinks are not specifically addressed in 'scoping' portion of ADA final rule; 'at least one' is assumed, based on other plumbing fixture requirements).*		
4.24.2	Height	Sinks shall be mounted with the rim or counter surface no higher than 34" above the finish floor.		
4.24.3	Knee Clearance	Knee clearance of 27" high minimum, 30" wide minimum, and 19" deep minimum shall be provided underneath sinks.		
4.24.4	Depth	Each sink shall be a maximum 6-1/2" deep.		
4.24.5	Clear Floor Space	A clear floor space 30" by 48" shall be provided in front of a sink to allow forward approach. The clear floor space shall adjoin or overlap an accessible route and shall extend a maximum of 19" underneath the sink.		
4.24.6	Exposed Pipes and Surfaces	Hot water and drain pipes under lavatories shall be insulated or otherwise configured to protect against contact. There shall be no sharp or abrasive surfaces under lavatories.		
4.24.7 4.27.4	Faucets	Controls shall be operable with one hand and shall not require tight grasping, pinching, or twisting of the wrist. The force required to activate controls shall be no greater than 5 lbf. Lever-operated, push-type, touch type and electronically controlled mechanisms are examples of acceptable designs. If self-closing valves are used, the faucet shall remain open for at least 10 seconds.		

NOTES/SKETCHES:

ADAAG SEC.	ITEM	TECHNICAL REQUIREMENTS	EXISTING CONDITION/NOTES	OK
4.23.8 4.20.1	[redacted]	If bathtubs or showers are provided, then at least one tub shall comply with this section, or at least one shower complying with **Element 12.7: Shower Stalls** shall be provided.		
4.20.2	Floor Space	Clear floor space in front of bathtubs shall be provided as follows (*all dimensions are minimums*): In tub seat, with approach from head end of tub: 30" wide, 60" long. In tub seat, side approach: 48" wide, 60" long. Seat at head of tub, with approach from head end: 30" wide, 75" long. Lavatory may be located at foot (control) end of tub within the required clear floor space.		
4.20.3	Seat	An in-tub seat or a seat at the head end of the tub shall be provided. Seat at head of tub, where used, shall be 15" wide. Seats shall be securely and shall shall not slip during use. The structural strength of seats and their attachments shall comply with **Element 12.9: Tub/Shower Seats.**		
4.20.4	Grab Bars	Grab Bars shall be provided as follows: **With In Tub Seat:** Control wall: 24" long minimum, from outside wall, 33-36" above floor. Back wall: 2 bars, 24" long minimum, 12" maximum from foot end, 24" maximum from head end; one 33-36" above floor, one 9" above top of tub. Head wall: 12" minimum, from outside wall, 33-36"above floor. **With Seat at Head of Tub:** Control wall: 24" long minimum, from outside wall, 33-36" above floor. Back wall: 2 bars, 48" long minimum, 12" maximum from foot end, 15" maximum from head end; one 33-36" above floor, one 9" above top of tub. Head wall: none. Refer to **Element 12.8: Grab Bars** for size and structural requirements.		
4.20.5 4.27.4	Controls	Faucets and shower controls shall be operable with one hand and shall not require tight grasping, pinching, or twisting of the wrist. The force required to activate controls shall be no greater than 5 lbf. Controls shall be located on the foot wall below the grab bar, and shall be offset to the front half of the tub.		

Building: _____

Date Reviewed: _____

Reviewed by: _____

ADAAG SEC.	ITEM	TECHNICAL REQUIREMENTS	EXISTING CONDITION/NOTES	OK
4.20.6	Shower Unit	A shower spray unit with a hose at least 60" long that can be used both as a fixed shower head and as a hand-held shower shall be provided.		
4.20.7	Bathtub Enclosures	If provided, enclosures shall not obstruct controls or transfer from wheelchairs onto bathtub seat or into tub. Enclosures on bathtubs shall not have tracks mounted on their rims.		

NOTES/SKETCHES:

ADAAG SEC.	ITEM	TECHNICAL REQUIREMENTS	EXISTING CONDITION/NOTES	OK
4.23.8 4.21.1	Where required	If bathtubs or showers are provided, then at least one shower shall comply with this section, or at least one tub complying with **Element 12.6: Bathtubs** shall be provided.		
4.21.2	Size and Clearances	Shower stall size and clear floor space shall comply with one of the following two options *(except as otherwise permitted in Transient Lodging)*: **'Transfer shower'** Size: 36" wide by 36" deep. Clear Floor Space: 36" wide minimum,48" long minimum, from control wall,extending 12" minimum beyond seat wall. *(Lavatory may not protrude into clear floor space)*. **'Roll-In shower'** Size: 30" deep minimum by 60" long minimum. Clear Floor Space: 36" wide minimum, 60" long minimum. *(Lavatory may be located within clear floor space)*.		
4.21.3	Seat	Seat is required in 36" by 36" stalls, and shall have the following features: Shall be 17-19" above bathroom floor. Shall extend the full depth of the stall. Shall be located on the side wall opposite control wall. Maximum space between wall and seat edge shall be 1-1/2". Shall project 16" maximum into stall width, except at the rear 15" maximum of the stall, where,the seat may project 23" maximum into the stall width. Where a fixed seat is provided in a roll in shower, it shall be a folding type and shall be mounted on the wall adjacent to the controls. The structural strength of seats and their attachments shall comply with **Element 12.9: Tub/Shower Seats**.		
4.21.4	Grab Bars	Grab Bars, mounted 33-36" above the floor, shall be provided as follows: **Transfer Shower:** Control wall: full width, connecting to back wall grab bar. Back wall: 18" long, connecting to control wall grab bar. Seat wall: none **Roll-In Shower:** Side walls: full width, connecting to grab bar on back wall. Back wall: full width, connecting to grab bars on side walls. Refer to **Element 12.8: Grab Bars** for size and structural requirements.		

Building: _____

Date Reviewed: _____

Reviewed by: _____

ADAAG SEC.	ITEM	TECHNICAL REQUIREMENTS	EXISTING CONDITION/NOTES	OK
4.21.5	Controls	At transfer showers, controls shall be on a side wall, opposite the seat wall, and shall be offset to the front half of the stall. At roll in showers, controls may be located on the back wall, with the shower head a maximum 27" from a side wall, or on either side wall. If located on the back wall, controls shall be offset to one side. All shower controls shall be located 38" minimum and 48" maximum above the floor. Faucets and shower controls shall be operable with one hand and shall not require tight grasping, pinching, or twisting of the wrist. The force required to activate controls shall be no greater than 5 lbf.		
4.21.6	Shower Unit	A shower spray unit with a hose at least 60" long that can be used both as a fixed shower and as a hand-held shower shall be provided. **Exception:** In unmonitored facilities where vandalism is a consideration, a fixed shower head mounted at 48" above the shower floor may be used in lieu of the hand-held shower head.		
4.21.7	Curbs	If provided, curbs on transfer showers shall be no higher than 1/2". Roll in showers shall not have curbs.		
4.21.8	Shower Enclosures	If provided, enclosures for shower stalls shall not obstruct controls or obstruct transfer from wheelchairs onto shower seats.		

NOTES/SKETCHES:

ADAAG SEC.	ITEM	TECHNICAL REQUIREMENTS	EXISTING CONDITION/NOTES	OK
4.16.4 4.17.6 4.20.4 4.21.4	[illegible]	Grab bars required by Elements 12.1, 12.2, 12.6, and 12.7 shall comply with this section.		
4.26.2	Size and Spacing	Diameter or width of gripping surface shall be 1-1/4" to 1-1/2", or the shape shall provide an equivalent gripping surface. The space between grab bars and adjacent walls shall be 1-1/2".		
4.26.3	Structural Strength	Grab Bars and mounting devices shall meet the following requirements: 1. Bending stress induced by maximum bending moment from application of 250 lbf shall be less than allowable stress for material used 2. Shear stress induced by application of 250 lbf shall be less than allowable shear stress for material used. If connection between grab bar and mounting bracket is considered to be fully restrained, then direct and torsional shear stresses shall be totaled for the combined shear stress, which shall not exceed the allowable shear stress. 3. Shear stress induced in a fastener or mounting device from application of 250 lbf shall be less than allowable lateral load of either the fastener or mounting device or the supporting structure, whichever is the smaller allowable load. 4. Tensile force induced in a fastener by a direct tension force of 250 lbf plus the maximum moment from the application of 250 lbf shall be less than the allowable withdrawal load between the fastener and the supporting structure. 5. Grab bars shall not rotate within their fittings.		
4.26.4	Eliminating Hazards	Grab bars and adjacent wall surfaces shall be free of sharp or abrasive surfaces. Edges shall have a radius of 1/8" minimum.		

NOTES/SKETCHES:

BOMA®

ELEMENT 12.9: TUB / SHOWER SEATS

Note: Complete verification of compliance with 'structural strength' requirements listed below will require a structural analysis of seats and their attachments.

Building: _____
Date Reviewed: _____
Reviewed by: _____

ADAAG SEC.	ITEM	TECHNICAL REQUIREMENTS	EXISTING CONDITION/NOTES	OK
4.20.3 4.21.3	Where applicable	Bathtubs: In-tub seats, or seats at head end of accessible bathtubs, shall comply with this section. (*Refer to Element 12.6: Bathtubs.*) Showers: Required seat in 'transfer' shower, and any seat provided in a 'roll in' shower, shall comply with this section. (*Refer to Element 12.7: Shower Stalls.*)		
4.35.4	Where applicable	Benches required in accessible dressing and fitting rooms (*Refer to Element 20: Dressing and Fitting Rooms*) shall comply with the structural strength requirements of this section.		
4.26.3	Structural Strength	Seats and mounting devices shall meet the following requirements: 1. Bending stress induced by maximum bending moment from application of 250 lbf shall be less than allowable stress for material used. 2. Shear stress induced by application of 250 lbf shall be less than allowable shear stress for material used. If connection between seat and mounting bracket is considered to be fully restrained, then direct and torsional shear stresses shall be totaled for th combined shear stress, which shall not exceed the allowable shear stress. 3. Shear stress induced in a fastener or mounting device from application of 250 lbf shall be less than allowable lateral load of either the fastener or mounting device or the supporting structure, whichever is the smaller allowable load. 4. Tensile force induced in a fastener by a direct tension force of 250 lbf plus the maximum moment from the application of 250 lbf shall be less than the allowable withdrawal load between the fastener and the supporting structure.		

NOTES/SKETCHES:

ADAAG SEC.	ITEM	TECHNICAL REQUIREMENTS	EXISTING CONDITION/NOTES	OK
4.1.3(19)(a)	Wheelchair Locations: Where Required	In places of assembly with fixed seating, accessible wheelchair locations shall comply with this section, and shall be provided in the following quantities: **Seating Capacity** — **Wheelchair Locations** 4 to 25 — 1 26 to 50 — 2 51 to 300 — 4 301 to 500 — 6 over 500 — 6, plus 1 per additional 100 seats In addition, 1%, but not less than 1, of all fixed seats shall be aisle seats with no armrests on the aisle side, or removable or folding armrests on the aisle side. Each such seat shall be identified by a sign or marker. Signage notifying patrons of availability of such seats shall be posted at the ticket office.		
4.1.3(19)(b)	Assistive Listening Systems: Where Required	This section applies to assembly areas where audible communications are integral to the use of such spaces *(e.g., concert and lecture halls, playhouses and movie theaters, meeting rooms, etc.)*. Such areas require a permanently installed assistive listening system if: 1. They have fixed seating; and 2. They either accommodate at least 50 persons, or they have an audio amplification system. Other assembly areas in this category require one of the following: 1. A permanently installed assistive listening system; or 2. An adequate number of electrical outlets or other supplementary wiring necessary to support a portable assistive listening system. The minimum number of receivers provided shall be equal to 4% of the total number of seats, but in no case less than two. Signage shall be provided to notify patrons of the availability of a listening system.		
4.33.5 4.1.6(3)(f)(ii)	Access to Performing Areas	An accessible route shall connect wheelchair seating locations with performing areas, including stages, arena floors, dressing rooms, locker rooms, and other spaces used by performers. **Alterations / Existing Conditions:** Where it is technically infeasible to alter all performing areas to be on an accessible route, at least one of each type of performing area shall be made accessible.		
4.33.3 4.1.6(3)(f)(i)	Placement of Wheelchair Locations	Wheelchair areas shall be an integral part of any fixed seating plan and shall be distributed so as to provide people with physical disabilities a choice of admission prices and lines of sight comparable to those for the general public.		

ADAAG SEC.	ITEM	TECHNICAL REQUIREMENTS	EXISTING CONDITION/NOTES	OK
4.33.3 4.1.6(3)(f)(i) *(cont'd)*	Placement of Wheelchair Locations *(cont'd)*	They shall adjoin an accessible route that also serves as a means of egress in case of emergency. At least one companion fixed seat shall be provided next to each wheelchair seating area. When the seating capacity exceeds 300, wheelchair spaces shall be provided in more than one location. Readily removable seats may be installed in wheelchair spaces when the spaces are not required to accommodate wheelchair users. **Exception:** Accessible viewing positions may be clustered for bleachers, balconies, and other areas having sight lines that require slopes greater than 5%. Equivalent accessible viewing positions may be located on levels having accessible egress. **Alterations / Existing Conditions:** Where it is technically infeasible to disperse accessible seating throughout an altered assembly area, accessible seating areas may be clustered. Each accessible seating area shall have provisions for companion seating and shall be located on an accessible route that also serves as a means of emergency egress.		
4.33.2	Size of Wheelchair Locations	Each wheelchair location shall provide the following clear floor space: Forward or rear access: 33" wide minimum, 48" deep minimum. Side access: 33" wide minimum, 60" deep minimum		
4.33.4	Surfaces	The ground or floor surface at wheelchair locations shall be level. Surfaces shall be stable, firm, and slip resistant. *(If carpeted, refer to requirements under **Element 5: Accessible Route**.)*		
4.33.6	Placement of Listening Systems	If the listening system provided serves individual fixed seats, then such seats shall be located within a 50' viewing distance of the stage or playing area and shall have a complete view of the stage or playing area.		
4.33.7	Types of Listening Systems	Assistive listening systems *(ALS)* are intended to augment standard public address and audio systems by providing signals which can be received directly by persons with special receivers or their own hearing aids and which eliminate or filter background noise. The type of ALS appropriate for a particular application depends on the characteristics of the setting, the nature of the program, and the intended audience. Magnetic induction loops, infra red and radio frequency systems are types of listening systems which are appropriate for various applications.		

ADAAG SEC.	ITEM	TECHNICAL REQUIREMENTS	EXISTING CONDITION/NOTES	OK
4.1.3(12)(a)	Where applicable	If fixed or built in storage facilities such as cabinets, shelves, closets, and drawers are provided in accessible spaces, at least one of each type provided shall contain storage space complying with this section. Additional storage, which does not comply with this section, may be provided.		
4.1.3(12)(b)	Where applicable	Shelves or display units allowing self service by customers in mercantile occupancies shall be located on an accessible route.		
4.1.7(3)(e)	Where required	**Historic Preservation:** Displays and written information, documents, etc. should be located where they can be seen by a seated person. Exhibits and signage displayed horizontally *(e.g., open books)* should be no higher than 44" above the floor.		
4.25.2	Clear Floor Space	A clear floor space at least 30" by 48" that allows either a forward or parallel approach by a person using a wheelchair shall be provided at accessible storage facilities.		
4.25.3	Height	Where a forward reach is required, accessible storage spaces shall be 48" maximum and 15" minimum above the floor. If the forward reach is over an obstruction *(with knee space equal to or greater than reach distance)* 20 - 25" deep, the maximum height shall be 44"; If the obstruction is less than 20", maximum height shall be 48". Where a side reach is provided, accessible storage spaces shall be 54" maximum and 9" minimum above the floor. Maximum height shall be 46" for side reach over an obstruction 34" maximum high and 24" maximum deep. Clothes rods or shelves shall be a maximum 54" above floor where a side reach is required. Where the distance from the wheelchair to the clothes rod or shelf exceeds 10" *(as at closets with inaccessible doors)* the following criteria shall be met: Shelves: maximum reach: 21"; height: 48" maximum, 9" minimum. Clothes rods: 21" maximum reach; Height: 48" maximum.		
4.25.4 4.27.4	Hardware	Hardware for accessible storage facilities shall be operable with one hand and shall not require tight grasping, pinching, or twisting of the wrist. The force required to activate hardware shall be no greater than 5 lbf.		

BOMA®

ELEMENT 15: ALARMS

Bldg: _____
Date Reviewed: _____
Reviewed by: _____

ADAAG SEC.	ITEM	TECHNICAL REQUIREMENTS	EXISTING CONDITION/NOTES	OK
4.1.3(14)	Where applicable	If emergency warning systems are provided, then they shall include both audible alarms and visible alarms complying with this section.		
4.28.1	Where required	When required, visual alarms shall be provided in each of the following areas, as a minimum: restrooms and any other general usage areas *(e.g., meeting rooms)*, hallways, lobbies, and any other area for common use.		
4.28.2	Audible Alarms	If provided, audible alarms shall produce a sound that exceeds the prevailing equivalent sound level in the room or space by at least 15 dba or exceeds any maximum sound level with a duration of 60 seconds by 5 dba, whichever is louder. Sound levels for alarm signals shall not exceed 120 dba.		
4.28.3	Visual Alarms	Visual alarm signal appliances shall be integrated into the building or facility alarm system. If single station *audible* alarms are provided then single station *visual* alarm signals shall be provided. Visual alarm appliances shall have the following features: 1. The lamp shall be a xenon strobe type or equivalent. 2. The color shall be clear or nominal white *(i.e., unfiltered or clear filtered white light)*. 3. The maximum pulse duration shall be two tenths of one second with a maximum duty cycle of 40%. *(The pulse duration is defined as the time interval between initial and final points of 10% of maximum signal.)* 4. The intensity shall be a minimum of 75 candela. 5. The flash rate shall be a minimum of 1 Hz and a maximum of 3 Hz. 6. The appliance shall be placed 80" above the highest floor level within the space or 6" below the ceiling, whichever is lower. 7. In general, no place in any room or space shall be more than 50' from the signal *(measured in a horizontal plane)*. In large rooms and spaces exceeding 100' across, without obstructions 6' above the finish floor, such as auditoriums, devices may be placed around the perimeter, spaced a maximum 100' apart, in lieu of suspending appliances from the ceiling. 8. No place in common corridors or hallways shall be more than 50' from the signal.		
4.28.4	Auxiliary Alarms	Units and sleeping accommodations shall have a visual alarm connected to the building emergency alarm system or shall have a standard 110 volt electrical receptacle into which such an alarm can be connected and a means by which a signal from the building emergency alarm can trigger such an auxiliary alarm. When visual signals are in place, the signal shall be visible in all areas of the unit or room. Instructions for use of the auxiliary alarm or receptacle shall be provided.		

ADAAG SEC.	ITEM	TECHNICAL REQUIREMENTS	EXISTING CONDITION/NOTES	OK
4.1.2(7) 4.1.3(16)(a)	Where applicable	Signs which designate permanent rooms and spaces shall comply with the requirements listed below for: Raised and Brailled Characters and Pictograms Finish and Contrast Mounting Location and Height		
4.1.2(7) 4.1.3(16)(b)	Where applicable	Signs which provide direction to, or information about, functional spaces of the building shall comply with the requirements listed below for: Character Proportion Character Height Finish and Contrast **Exception:** Building directories, menus, and all other signs which are temporary are not required to comply.		
4.1.2(7)	Where applicable	Elements and spaces of accessible facilities which shall be identified by the International Symbol of Accessibility are: a. Parking spaces designated as reserved for persons with disabilities; b. Accessible passenger loading zones; c. Accessible entrances when not all are accessible (inaccessible entrances shall have directional signage to indicate route to nearest accessible entrance); d. Accessible toilet and bathing facilities when not all are accessible.		
4.30.2	Character Proportion	Letters and numbers on signs shall have a width to height ratio between 3:5 and 1:1, and a stroke-width-to-height ration between 1:5 and 1:10.		
4.30.3	Character Height	Characters and numbers on signs shall be sized according to the viewing distance from which they are to be read. For signs higher than 80" above the finish floor, character size shall be 3" minimum. The minimum height is measured using an upper case X. Lower case letters are permitted.		
4.30.4	Raised and Brailled Characters and Pictograms	Letters and numerals shall be raised 1/32", upper case, sans serif or simple serif type and shall be accompanied by grade 2 braille. Raised character height: 5/8" minimum, 2" high maximum. Pictograms shall be accompanied by the equivalent verbal description placed directly below the pictogram. The border dimension of the pictogram shall be 6" minimum.		

Building: _____

Date Reviewed: _____

Reviewed by: _____

ADAAG SEC.	ITEM	TECHNICAL REQUIREMENTS	EXISTING CONDITION/NOTES	OK
4.30.5	Finish and Contrast	The characters and background of signs shall be eggshell, matte, or other non glare finish. Characters and symbols shall contrast with their background *(either light characters on a dark background or dark characters on a light background)*.		
4.30.6	Mounting Location and Height	Where permanent identification is provided for rooms and spaces, signs shall be installed on the wall adjacent to the latch side of the door. Where there is no wall space to the latch side of the door, including at double leaf doors, signs shall be placed on the nearest adjacent wall. Mounting height shall be 60" above the finish floor to the centerline of the sign. Mounting location for such signage shall be so that a person may approach within 3" of		
4.30.7	Symbols of Accessibility	1. Facilities and elements required to be identified as accessible shall use the International Symbol of Accessibility. 2. Volume Control Telephones, when required, shall be identified by a sign containing a depiction of a telephone handset with radiating sound waves. 3. Text Telephones, when required, shall be identified by the International TDD Symbol. In addition, if a facility has a public text telephone, directional signage indicating the location of the nearest text telephone shall be placed adjacent to all banks of telephones which do not contain a text telephone. Such directional signage shall include the international TDD symbol. If a facility has no banks of telephones, the directional signage shall be provided at the entrance *(e.g., in a building directory)*. 4. Assistive Listening Systems. In assembly areas where permanently installed assistive listening systems are required, the availability of such systems shall be identified with signage that includes the International Symbol of Access for Hearing Loss.		

NOTES/SKETCHES:

ADAAG SEC.	ITEM	TECHNICAL REQUIREMENTS	EXISTING CONDITION/NOTES	OK
1 4.1.3(17)(a)	Where applicable	If public pay telephones, public closed circuit telephones, or other public telephones are provided, then they shall comply with this section in the quantities indicated below: 1. If one or more single unit of a type of public telephone is provided on a floor, then at least one of those phones shall comply with this section. 2. If one bank *(defined as two or more adjacent public telephones, often installed as a unit)* of a type of telephone is provided on a floor, then at least one of the telephones at the bank shall comply with this section. 3. If two or more banks of a type of public telephone are provided on a floor, then at least one telephone per bank shall comply with this section. The accessible unit may be installed as a single unit in proximity *(either visible or with signage)* to the bank. At least one public telephone per floor shall meet the requirements for a forward reach telephone. **Exception:** For exterior installations only, if dial tone first service is available, then a side reach telephone may be installed instead of the required forward reach telephone *(i.e., one telephone in proximity to each bank shall comply with this section)*. Additional public telephones may be installed at any height. Unless otherwise specified, accessible telephones may be either forward or side reach telephones.		
4 1.3(17)(b)	Where applicable	All telephones required to be accessible shall be equipped with a volume control. In addition, 25%, but never less than one, of all other public telephones provided shall be equipped with a volume control and shall be dispersed among all types of telephones, including closed circuit telephones, throughout the building or facility. Signage displaying the International Symbol of Access for Hearing Loss shall be provided at each telephone equipped with a volume control.		
4.1..3(17)(c)	Text telephones: Where required	1. If a total number of 4 or more public pay telephones *(including both interior and exterior phones)* is provided at a site, and at least one is in an interior location, then at least one interior public text telephone shall be provided. 2. If an interior public pay telephone is provided in a stadium or arena, in a convention center, in a hotel with a convention center, or in a covered mall, at least one interior public text telephone shall be provided in the facility. 3. If a public pay telephone is located in or adjacent to a hospital emergency room, hospital recovery room, or hospital waiting room, one public text telephone shall be provided at each such location.		

BOMA

ELEMENT 17: PUBLIC TELEPHONES cont'd

Building: _____
Date Reviewed: _____
Reviewed by: _____

ADAAG SEC.	ITEM	TECHNICAL REQUIREMENTS	EXISTING CONDITION/NOTES	OK
4.1.3(17)(d)	Text Telephones: Where required	Where a bank of telephones in the interior of a building consists of 3 or more public pay telephones, at least one public pay telephone in each such bank shall be equipped with a shelf and outlet to accommodate a portable text telephone as described below.		
4.1.6(1)(e)	Where required	**Alterations / Existing Conditions:** At least one interior public text telephone shall be provided if: 1. Alterations to existing buildings or facilities with less than 4 exterior or interior public pay telephones would increase the total number to 4 or more telephones with at least one in an interior location; or 2. Alterations to one or more exterior or interior public pay telephones occur in an existing building or facility with 4 or more public telephones with at least one in an interior location.		
4.31.2	Clear Floor Space	A clear floor or ground space at least 30" by 48" that allows either a forward or parallel approach by a person using a wheelchair shall be provided at telephones. Bases, enclosures, and fixed seats shall not impede approaches to telephones by people who use wheelchairs.		
4.31.3	Mounting Height	The highest operable part of the telephone shall be 48" maximum above the floor where a forward reach is required, and 54" maximum where a side reach is required. If the forward reach is over an obstruction *(with knee space equal to or greater than reach distance)* 20 -25" deep the maximum height shall be 44"; if the obstruction is less than 20" deep, maximum height shall be 48". Maximum height shall be 46" for side reach over an obstruction 34" maximum high and 24" maximum deep.		
4.31.4 4.4.1	Protruding Objects	Objects projecting from walls with their leading edges between 27" and 80" above the finished floor shall protrude no more than 4" into walks or corridors. Objects projecting from walls with their leading edges at or below 27" above the finished floor may protrude any amount. Free-standing objects mounted on posts or pylons may overhang 12" maximum from 27" to 80" above the finished floor or ground. Protruding objects shall not reduce the required clear width of an accessible route or maneuvering space.		
4.31.5	Hearing Aid Compatible and Volume Control Telephones	Where required. 1. Telephones shall be hearing aid compatible. 2. Volume controls, capable of a minimum of 12 dbA and a maximum of 18 dbA above normal, shall be provided. If an automatic reset is provided, then 18 dbA may be exceeded		

ADAAG SEC.	ITEM	TECHNICAL REQUIREMENTS	EXISTING CONDITION/NOTES	OK
4.31.6	Controls	Telephones shall have pushbutton controls where service for such equipment is available.		
4.31.7	Telephone Books	Telephone books, if provided, shall be located in a position that complies with the same reach ranges noted above for operable parts of telephones.		
4.31.8	Cord Length	The cord from the telephone to the handset shall be at least 29" long.		
4.31.9	Text Telephones	Where required: 1. Text telephones used with a pay telephone shall be permanently affixed within, or adjacent to, the telephone enclosure. If an acoustic coupler is used, the telephone cord shall be sufficiently long as to allow connection of the text telephone and the telephone receiver. 2. Pay telephones designed to accommodate a portable text telephone shall be equipped with a shelf and an electrical outlet within or adjacent to the telephone enclosure. The telephone handset shall be capable of being placed flush on the surface of the shelf. The shelf shall be capable of accommodating a text telephone and shall have 6" minimum vertical clearance in the area where the text telephone is to be placed. 3. Equivalent facilitation may be provided. *(For example, a portable text telephone may be made available in a hotel at the registration desk if it is available on a 24 hour basis for use with nearby public pay telephones. In this instance, at least 1 pay telephone shall be designed to accommodate the portable text telephone.)*		

NOTES/SKETCHES

BOMA®

ELEMENT 18: SEATING AND TABLES

Note: This section applies **only** to fixed or built in seating and tables.

Building: _____

Date Reviewed: _____

Reviewed by: _____

ADAAG SEC.	ITEM	TECHNICAL REQUIREMENTS	EXISTING CONDITION/NOTES	OK
4.1.3(18)	Not applicable	If fixed or built in seating or tables *(including, but not limited to study carrels and student laboratory stations)* are provided in accessible public or common use areas, at least 5%, but not less than 1, shall comply with this section. An accessible route shall lead to and through such areas.		
4.32.2	Seating	If seating spaces for people in wheelchairs are provided at fixed tables or counters, a minimum clear floor space of 30" by 48" shall be provided. Clear floor space may extend under the table or counter *(into the knee space)* 19" maximum.		
4.32.3	Knee clearances	If seating for people in wheelchairs is provided at fixed tables or counters, knee spaces at least 27" high, 30" wide, and 19" deep shall be provided.		
4.32.4	Height of Tables or Counters	The tops of accessible tables and counters shall be 28" minimum, and 34" maximum, above the finish floor.		

NOTES/SKETCHES

ADAAG SEC.	ITEM	TECHNICAL REQUIREMENTS	EXISTING CONDITION/NOTES	OK
4.1.3(20) 4.34.1	Where applicable	When provided, at least one automatic teller machine *(ATM)* at each location shall comply with this section and shall be on an accessible route.		
4.34.2 4.27.2	Clear Floor Space	A clear floor space at least 30" by 48" that allows either a forward or parallel approach by a person using a wheelchair shall be provided. **Exception:** Drive-up only ATM's need not comply with this item.		
4.34.2 4.27.3	Height	Where a forward reach is required, controls and operating mechanisms shall be 48" maximum and 15" minimum above the floor. If the forward reach is over an obstruction *(with knee space equal to or greater than reach distance)* 20-25" deep, the maximum height shall be 44"; where the obstruction is less than 20" inches deep, maximum height shall be 48". Where a side reach is provided, controls and operating mechanisms shall be 54" maximum and 9" minimum above the floor. Maximum height shall be 46" for side reach over an obstruction 34" maximum high and 24" maximum deep. **Exception:** Drive-up-only ATM's need not comply with this item.		
4.34.2 4.27.4	Controls and Operating Mechanisms	Shall be operable with one hand and shall not require tight grasping, pinching, or twisting of the wrist. The force required to activate controls shall be no greater than 5 lbf.		
4..34.3	Clearances and Reach Ranges	Free standing or built-in units not having a clear space under them shall provide for a parallel approach and both a forward and side reach to the unit. **Exception:** Drive-up-only ATM's need not comply with this item.		
4.34.4	Equipment for Persons with Vision Impairments	Instructions and all information for use shall be made accessible to and independently usable by persons with vision impairments.		

NOTES/SKETCHES:

BOMA®

ELEMENT 20: DRESSING AND FITTING ROOMS

Building: _____

Date Reviewed: _____

Reviewed by: _____

ADAAG SEC.	ITEM	TECHNICAL REQUIREMENTS	EXISTING CONDITION/NOTES	OK
4.1.3(21)	Where required	Where dressing and fitting rooms are provided for use by the general public, patients, customers or employees, 5 %, but at least one, of the dressing rooms for each type of use in each cluster of dressing rooms shall be accessible and shall comply with this section. *(Examples of types of dressing rooms are those serving different genders or distinct and different functions as in different treatment or examination facilities).*		
4.1.6(3)(h)	Where required	**Alterations / Existing Conditions:** In alterations where technical infeasibility can be demonstrated, one dressing room for each sex on each level shall be made accessible. Where only unisex dressing rooms are provided, accessible unisex dressing rooms may be used to fulfill this requirement.		
4.35.2 4.2.3	Clear Floor Space	A clear floor space allowing a person in a wheelchair to make a 180° turn shall be provided in every accessible dressing room entered through a swinging or sliding door. *(Either a 60" clear diameter space, or a T-shaped space, 60" square, with 36" wide legs, is acceptable.)* No door shall swing into any part of the turning space. Turning space shall not be required in a private dressing room entered through a curtained opening at least 32" wide if clear floor space for a wheelchair is provided within the dressing room.		
4..35.3	Doors	All doors to accessible dressing rooms shall be accessible. *(Refer to Element 10: Doors)*		
4.35.4	Bench	Every accessible dressing room shall have a 24" by 48" bench fixed to the wall along the larger dimension. The bench shall be mounted 17" to 19" above the finish floor. Clear floor space shall be provided alongside the bench to allow a person using a wheelchair to make a parallel transfer onto the bench. The structural strength of the bench shall comply with **Element 12.9: Tub/Shower Seats.** Where installed in conjunction with showers, swimming pools, or other wet locations, water shall not accumulate upon the surface of the bench and the bench shall have a slip-resistant surface.		
4.35.5	Mirror	Where mirrors are provided in dressing rooms of the same use, then in an accessible dressing room, a full length mirror, measuring at least 18" wide by 54" high, shall be mounted in a position affording a view to a person on the bench as well as to a person in a standing position.		

ADAAG SEC.	ITEM	TECHNICAL REQUIREMENTS	EXISTING CONDITION/NOTES	OK
5.1	[illegible]	Except as specified or modified in this section, restaurants and cafeterias shall comply with all applicable portions of **Elements 1-20**.		
5.1	Seating and Tables	Where fixed tables *(or dining counters, where food is consumed, but there is no service)* are provided, at least 5%, but not less than 1, shall be accessible and shall comply with **Element 18: Seating and Tables.** In establishments where separate smoking and non smoking sections are provided, the required number of accessible fixed tables *(or counters)* shall be proportionally distributed between the smoking and non smoking sections. In new construction, and where practicable in alterations, accessible fixed tables *(or counters)* shall be distributed throughout the space or facility.		
5.2	Counters and Bars	Where food or drink is served at counters exceeding 34" in height, for consumption by customers seated on stools or standing at the counter, a portion of the main counter, 60" long minimum, complying with **Element 18: Seating and Tables,** shall be provided, or service shall be available at accessible tables within the same area.		
5.3	Access Aisles	All accessible fixed tables shall be accessible by means of an access aisle at least 36" clear *(measured between parallel edges of tables or between a wall and the table edges)*.		
5.4	Dining Areas	In new construction, all dining areas *(including raised or sunken dining areas, loggias, and outdoor seating areas)* shall be accessible. In non-elevator buildings, an accessible means of vertical access to a mezzanine is not required under the following conditions: 1. The area of the mezzanine seating measures no more than 33% of the area of the total accessible seating area; 2. The same services and decor are provided in an accessible space usable by the general public; and 3. The accessible areas are not restricted to use by people with disabilities. **Alterations/Existing Conditions:** In alterations, accessibility to raised or sunken dining areas, or to all parts of outdoor seating areas is not required provided that the same services and decor are provided in an accessible space usable by the general public and are not restricted to use by people with disabilities		

BOMA INTERNATIONAL

RESTAURANTS & CAFETERIAS cont'd

Building: _____

Date Reviewed: _____

Reviewed by: _____

ADAAG SEC.	ITEM	TECHNICAL REQUIREMENTS	EXISTING CONDITION/NOTES	OK
5.5	Food Service Lines	Food service lines shall have a minimum clear width of 36" (*preferred width is 42", to allow passage around a person using a wheelchair*). Tray slides shall be 34" maximum above the floor. If self-service shelves are provided, at least 50% of each type shall be within the following reach ranges: Where a forward reach is required, accessible shelves shall be 48" maximum and 15" minimum above the floor. If the forward reach is over an obstruction (*with knee space equal to or greater than reach distance*) 20 -25" deep, the maximum height shall be 44"; if the obstruction is less than 20" deep, maximum height shall be 48". Where a side reach is provided, accessible shelves shall be 54" maximum and 9" minimum. Maximum height shall be 46" for side reach over an obstruction 34" maximum high and 24" maximum deep.		
5.6	Tableware and Condiment Areas	Self-service shelves and dispensing devices for tableware, dishware, condiments, food and beverages shall provide a minimum 30" by 48" clear floor space, and shall be located within the reach ranges specified above for self-service shelves.		
5.7	Raised Platforms	In banquet rooms or spaces where a head table or speaker's lectern is located on a raised platform, the platform shall be accessible by either a ramp or a platform lift. Open edges of a raised platform shall be protected by placement of tables or by a curb.		
5.8	Vending Machines and Other Equipment	Spaces for vending machines and other equipment shall provide a clear floor space, minimum 30" by 48", and all controls and operating mechanisms shall be located within the reach ranges specified above for self-service shelves.		

NOTES/SKETCHES:

ADAAG SEC.	ITEM	TECHNICAL REQUIREMENTS	EXISTING CONDITION/NOTES	OK
6.1 4.1.3(14)	Where applicable	Medical care facilities included in this section are those: In which people receive physical or medical treatment or care; and Where persons may need assistance in responding to an emergency; and Where the period of stay may exceed 24 hours. Such facilities shall comply with the requirements of **Elements 1-20** and with this section. **Exception:** Where emergency warning systems *(alarms)* are provided, their design may be modified to suit standard health care alarm design practice.		
6.1	Where required	1. **Hospitals - general purpose hospitals, psychiatric facilities, detoxification facilities:** At least 10% of patient bedrooms and toilets, and all public and common use areas are required to be designed and constructed to be accessible. 2. **Hospitals and rehabilitation facilities that specialize in treating conditions that affect mobility, or units within either that specialize in treating conditions that affect mobility:** All patient bedrooms and toilets, and all public and common use areas are required to be designed and constructed to be accessible. 3. **Long term care facilities, nursing homes:** At least 50% of patient bedrooms and toilets, and all public and common use areas are required to be designed and constructed to be accessible.		
6.1(4)	Where required	**Alterations / Existing Conditions:** When patient rooms are added or altered as part of a planned renovation of an entire wing, a department, or other discrete area of an existing medical facility, a percentage of the rooms being added or altered shall be made accessible in accordance with this section. The percentage of accessible altered or added rooms shall be consistent with the percentages specified above for the type of facility. *(This requirement applies to all alterations or additions until the total number of accessible patient rooms in the facility equals the number required for a newly constructed facility).* *(Example: If 20 patient rooms are to be altered in an existing 300 room 'general purpose' hospital, then 2 of these rooms (10%) shall be made accessible. As alterations proceed over time at least 10% of all altered rooms shall be made accessible, until at least 30 patient rooms in the hospital have been made accessible).* Where toilet/bathrooms are part of added or altered patient bedrooms which are required to be accessible, the toilet/bathroom shall also be accessible.		
6.2	Entrances	At least one accessible entrance complying with Element 4: **Entrances** shall be protected from the weather by canopy or roof overhang. Such entrances shall incorporate an accessible passenger loading zone (refer to Element 2: **Accessible Parking**).		

ADAAG SEC.	ITEM	TECHNICAL REQUIREMENTS	EXISTING CONDITION/NOTES	OK
6.3	Patient Bedrooms	Accessible patient bedrooms shall comply with **Elements 1-20** and with the following: 1. Each bedroom shall have a door that complies with **Element 10: Doors** *(Note maneuvering clearance exception for acute care patient rooms with 44" minimum clear width doors)*. 2. Each bedroom shall have an unobstructed turning space within the room. This space shall be either a 60" diameter circle or a T shaped space, 60" square, with 36" legs. *(In rooms with 2 beds, it is preferable that this space be located between beds.)* 3. Each bedroom shall have adequate space to provide a clear floor space minimum 36" wide on each side of the bed and to provide an accessible route to each side of the bed.		
6.4	Patient Toilet Rooms	Where a toilet/bathroom is provided as part of an accessible patient bedroom, the toilet/bathroom shall be on an accessible route and shall comply with **Element 12: Toilet/Bathrooms**.		

NOTES/SKETCHES:

ADAAG SEC.	ITEM	TECHNICAL REQUIREMENTS	EXISTING CONDITION/NOTES	OK
7.1	When Applicable	In addition to the requirements of Elements 1-20, all areas used for business transactions with the public shall comply with this section.		
7.2	Sales and Service Counters	In department stores and other retail stores where counters have cash registers and are provided for sales or distribution of goods or services to the public, at least one of each type shall have a portion of the counter which is at least 36" in length with a maximum height of 36" above the floor. This counter shall be on an accessible route. The accessible counters must be dispersed throughout the building or facility. **Alterations / Existing Conditions:** In alterations where it is technically infeasible to provide an accessible counter, an auxiliary counter meeting these requirements may be provided.		
7.2	Teller Windows, Information Counters	At ticketing counters, teller stations in a bank, registration counters in hotels and motels, box office ticket counters, and other counters that may not have a cash register, but at which goods or services are sold or distributed, either: 1. A portion of the main counter, minimum 36" in length, maximum 36" above the floor, shall be provided; or 2. An auxiliary counter with a maximum height of 36" in close proximity to the main counter shall be provided; or 3. Equivalent facilitation shall be provided, e.g., at a hotel registration counter this might consist of: a. a folding shelf attached to the main counter on which a person with disabilities can write, and b. use of the space at the side of the counter, for handing materials back and forth.		
7.3	Check-out Aisles	In new construction, accessible check-out aisles shall be provided in the following quantities: **Total Aisles** *(each design)* — **Minimum number accessible aisles** *(each design)* *1-4* — 1 5-8 — 2 8-15 — 3 over 15 — 3, plus 20% of additional aisles Check out aisles of different "design" are those which are specifically designed to serve different functions. Examples include, but are not limited to, the following features: length of		

BOMA®

BUSINESS AND MERCANTILE cont'd

Building: _____

Date Reviewed: _____

Reviewed by: _____

ADAAG SEC.	ITEM	TECHNICAL REQUIREMENTS	EXISTING CONDITION/NOTES	OK
7.3 *(cont'd)*	Check-out Aisles *(cont'd)*	belt or no belt, or permanent designation as an "express" lane. **Exception:** In new construction, where the selling space is less than 5000 square feet, only 1 accessible check-out aisle is required. **Alterations / Existing Conditions:** **Exception:** At least one of each design of check out aisle shall be made accessible when altered, until the number of accessible aisles of each design equals the number required for new construction.		
7.3	Check-out Aisles	Clear aisle width for accessible check-out aisle shall be 36" minimum, except that clear width may be reduced to 32" for a point not exceeding 24" in depth. Adjoining counter height shall not exceed 38". Height of counter lip may not exceed 40".		
7.2	Check-out Aisles	Accessible check-out aisles shall be identified by the International Symbol of Accessibility. Such signage shall be mounted above the check-out aisle in the same location where the aisle number or type of check-out is displayed.		
7.4	Security Bollards	Any device used to prevent the removal of shopping carts from store premises shall not prevent access or egress to people in wheelchairs. An alternate entry that is equally convenient to that provided for the ambulatory population is acceptable.		

NOTES/SKETCHES:

ADAAG SEC.	ITEM	TECHNICAL REQUIREMENTS	EXISTING CONDITION/NOTES	OK
8.1	When applicable	In addition to the requirements of Elements 1-20, all public areas of a library *(including reading and study areas, stacks, reference rooms, reserve areas, and special facilities or collections)* shall comply with this section.		
8.2	Reading and Study Areas	At least 5%, but not less than 1, of each element of fixed seating, tables, or study carrels shall comply with Element 18: Seating and Tables. Clearances between fixed accessible tables and between study carrels shall be 36" minimum typical. Clear width with turns around an obstruction less than 48" wide shall be 42" minimum, with 48" minimum width at turn.		
8.3	Check-out Areas	At least one lane at each check-out area shall have a portion of the counter which is at least 36" in length with a maximum height of 36" above the floor. This counter shall be on an accessible route. The accessible counters shall be dispersed throughout the building or facility.		
8.4	Card Catalogs and Magazine Displays	Clear aisle width shall be 36" minimum. Minimum reach height shall be 18". Maximum reach height shall be 48" for forward approach, 54" for side approach *(48" is preferred irrespective of approach)*.		
8.5	Stacks	Clear aisle width shall be 36" minimum typical. *(42" clear width preferred)* Clear width with turns around an obstruction less than 48" wide shall be 42" minimum, with 48" minimum width at turn. Shelf height in stack areas is unrestricted.		

NOTES/SKETCHES:

BOMA®

TRANSIENT LODGING

Building: _____

Date Reviewed: _____

Reviewed by: _____

ADAAG SEC.	ITEM	TECHNICAL REQUIREMENTS	EXISTING CONDITION/NOTES	OK
9(1)	Where applicable	Transient lodging includes facilities or portions thereof used for sleeping accommodations, when not classed as a medical care facility. *(This includes hotels, motels, inns, boarding houses, dormitories, resorts and other similar facilities).* Except as specified in this section, accessible transient lodging shall comply with the applicable requirements of Elements 1-20.		
9.1.1	Where applicable	All public use and common use areas shall be designed and constructed in accordance with Elements 1-20. **Exception:** This section does not apply to an establishment located within a building that contains not more than 5 rooms for rent or hire and that is actually occupied by the proprietor of such establishment as the residence of such proprietor.		
9.1.2	Accessible Units, Sleeping Rooms, and Suites: Where required	Accessible sleeping rooms or suites complying with this section shall be provided in the quantities indicated in the following table. In addition, in hotels of 50 or more sleeping rooms or suites, additional accessible sleeping rooms or suites that include a roll in shower shall also be provided as indicated in the table below. **No. of Rooms / Accessible Rooms / Rooms w/Roll-In Showers** 1-25 / 1 / 26-50 / 2 / 51-75 / 3 / 1 76-100 / 4 / 1 101-150 / 5 / 2 151-200 / 6 / 2 201-300 / 7 / 3 301-400 / 8 / 4 401-500 / 9 / 4 plus 1 for each 100 over 400 501-1000 / 2% of total / 1001 and over / 20 plus 1 for each 100 over 1000 Roll-In showers shall comply with one of the following: a. Roll-In shower requirements in Element 12.7: Shower stalls; or b. Alternate roll in shower: 60" deep minimum by 36" wide, controls on back wall, seat on side wall, minimum 24"long by 16" deep minimum, with grab bars on back wall and side wall opposite seat		

ADAAG SEC.	ITEM	TECHNICAL REQUIREMENTS	EXISTING CONDITION/NOTES	OK
9.1.3 4.1.3(14)	Sleeping Accommodations for Persons with Hearing Impairments Where required	In addition to accessible rooms required by table above, sleeping rooms and suites complying with the requirements of this section for Visual Alarms, Notification Devices, and Telephones shall be provided in the following quantities: **Number of Elements** — **Accessible Elements** 1-25 — 1 26-50 — 2 51-75 — 3 76-100 — 4 101-150 — 5 151-200 — 6 201-300 — 7 301-400 — 8 401-500 — 9 501-1000 — 2% of total 1001 and over — 20 plus 1 for each 100 over 1000 Sleeping accommodations required to comply with this section shall have an alarm system complying with **Element 15: Alarms.**		
9.1.5	Alterations to Accessible Units, Sleeping Rooms, and Suites	When sleeping rooms are altered in an existing facility, or portion thereof, subject to this section, at least 1 accessible sleeping room or suite complying with this section shall be provided for each 25 rooms, or fraction thereof, of rooms being altered, until the number of accessible rooms equals the number required for new construction. In addition, at least 1 sleeping room or suite for the hearing impaired, complying with requirements in this section for Visual Alarms, Notification Devices, and Telephones, shall be provided for each 25 rooms, or fraction thereof, of rooms being altered, until the number of such rooms equals the number required for new construction.		
9.1.4	Classes of Sleeping Accommodations	Sleeping rooms required to be accessible shall be dispersed among the various classes of sleeping accommodations available to patrons of the place of transient lodging. Factors to be considered include room size, cost, amenities provided, and the number of beds provided. It shall be deemed equivalent facilitation if the operator of a facility elects to limit construction of accessible rooms to those intended for multiple occupancy, provided such rooms are made available at the cost of a single occupancy room to an individual with disabilities who requests a single occupancy room		

Building: _____

Date Reviewed: _____

Reviewed by: _____

ADAAG SEC.	ITEM	TECHNICAL REQUIREMENTS	EXISTING CONDITION/NOTES	OK
9.2.2	Accessible Units, Sleeping Rooms and Suites	Shall be on an accessible route and shall have the following accessible elements and spaces: 1. A 36" clear width maneuvering space on both sides of the bed, when a single bed is provided. Where 2 beds are provided, a single 36" clear width maneuvering space between the beds shall be acceptable. 2. All accessible spaces and elements within the unit shall be connected by an accessible route. This does not require an elevator in multi story units, as long as the spaces identified in (6) and (7) below are on an accessible level and the accessible sleeping area is suitable for dual occupancy. 3. Doors and doorways for passage into and within all sleeping rooms, suites or other covered units shall comply with **Element 10: Doors**. 4. If fixed or built in storage facilities *(cabinets, shelves, closets, and drawers)* are provided in accessible spaces, at least one of each type shall comply with **Element 14: Storage**. Additional storage may be provided outside of the accessible reach ranges. 5. Controls shall be on an accessible route and shall be mounted at heights within reach ranges specified in **Elements 1-20**. Controls shall be operable with one hand and shall not require tight grasping, pinching, or twisting of the wrist. The force required to activate controls shall be no greater than 5 lbf. 6. Where provided, the following spaces shall be accessible: a. the living area. b. the dining area. c. at least one sleeping area. d. patios, terraces, or balconies. e. at least one full bathroom (with water closet, lavatory, and tub or shower). f. If only half baths are provided, at least one half bath. g. carports, garages, or parking spaces. 7. Kitchens, Kitchenettes, or Wet Bars, when provided within an accessible unit, shall be accessible. Clear floor space shall be provided for a front or parallel approach to cabinets, counters, sinks, and appliances. Countertops and sinks shall be 34" maximum above the floor. At least 50% of shelf space in cabinets and refrigerators/freezers shall be within reach ranges. Space shall be designed to allow for operation of doors on cabinets and appliances. 8. Sleeping room accommodations for persons with hearing impairments required by this section *(see table above)*, and complying with requirements below for visual alarms, notification devices,and telephones, shall be provided in the accessible sleeping room or suite.		

ADAAG SEC.	ITEM	TECHNICAL REQUIREMENTS	EXISTING CONDITION/NOTES	OK
9.3.1 9.3.2	Visual Alarms, Notification Devices and Telephones	In sleeping rooms required to comply with this section, auxiliary visual alarms shall be provided and shall comply with **Element 15: Alarms**. Visual notification devices shall also be provided (*to alert occupants of incoming telephone calls and a door knock or bell*). Notification devices shall not be connected to visual alarm appliances. Permanently installed telephones shall have volume controls (*complying with requirements for public telephones - see Element 17*); an electrical outlet within 4' of a telephone connection shall also be provided (*to facilitate use of a text telephone*). For purposes of this requirement, equivalent facilitation shall include the installation of electrical outlets (including outlets connected to the facilities central alarm system) and telephone wiring in sleeping rooms to enable persons with hearing impairments to utilize portable visual alarms and communication devices provided by the operator of the facility.		
9.5.1 9.5.2	Homeless Shelters, Halfway Houses, Transient Group Homes, and Other Social Service Establishments	**New Construction:** All public and common use areas shall comply with **Elements 1-20**. At least one of each type of amenity (*washers, dryers, and similar equipment for occupant use*) in each common area shall be accessible and shall be located on an accessible route to any accessible unit or sleeping accommodation. **Exception:** Where an elevator is not provided (*as permitted in Element 8: Elevators*) accessible amenities are not required on inaccessible floors. **Alterations / Existing Conditions:** 1. Social service establishments which are not homeless shelters: a. The provisions of Accessible Units, Sleeping Rooms, and Suites (*9.1.2*), and Alterations to Accessible Units, Sleeping Rooms, and Suites (*9.1.5*) shall apply to sleeping rooms and beds. b. Alterations of other areas shall comply with new construction provisions above (*9.5.1*). 2. Homeless shelters: If the following elements are altered, the following requirements apply: a. At least one public entrance shall allow a person with mobility impairments to approach, enter, and exit, including a door with 32" minimum clear width. b. Sleeping space for homeless persons, in quantity up to number required by table above (*9.1.2*), shall include door to sleeping areas with 32" clear width minimum, and maneuvering clearance at beds (*36" each side of a single bed, or 36" between 2 beds*) (*9.2.2(1)*). c. At least one accessible toilet room for each gender or one unisex toilet room (*with*		

uilding: _____

Date Reviewed: _____

Reviewed by: _____

ADAAG SEC.	ITEM	TECHNICAL REQUIREMENTS	EXISTING CONDITION/NOTES	OK
9.5.1 9.5.2 *(cont'd)*		*a privacy latch on the door)* shall be provided, with a door having 32" clear width minimum. At least one accessible water closet, lavatory, and if provided, tub or shower, shall be provided ***(Refer to Elements 12-12.9)***. **d.** At least one common area which a person with mobility impairment can approach, enter and exit, including clear door widths of 32" minimum. **e.** At least one route connecting elements (a),(b),(c) and (d) which a person with mobility impairments can use having clear width, passing spaces, turning spaces, and changes in level complying with the applicable sections of **Element 5: Accessible Route - Interior**. **f.** Homeless shelters can comply with the provisions of (a)-(e) by providing the above accessible elements on one accessible floor. **Accessible Sleeping Accommodations in New Construction:** Accessible sleeping rooms shall be provided in conformance with table above *(9.1.2)* and shall comply with requirements for Accessible Units, Sleeping Rooms and Suites *(where the items are provided)*. Additional sleeping rooms for persons with hearing impairments shall be provided in conformance with second table above *(9.1.3)* and shall comply with requirements for visual alarms, notification devices, and telephones. In facilities with multi-bed rooms or spaces, a percentage of the beds equal to the table provided in 9.1.2 shall comply.		

NOTES/SKETCHES:

ding: ___ ___ ___

Date Reviewed: _____

Reviewed by: _____

NOTES/SKETCHES:

Building: _____

Date Reviewed: _____

Reviewed by: _____

NOTES/SKETCHES:

For Additional Copies Of This Guidebook Contact:

BOMA International
1201 New York Ave., N.W.
Suite 300
Washington, DC 20005
(202) 408-2662
Fax: (202) 371-0181

TABLE OF CONTENTS

Appendix IV Accessibility Standards

Uniform Federal Accessibility Standards (UFAS)

ADA Accessibility Guidelines (ADAAG)

[The next page is Appendix IV, Page 161.]

FED - STD - 795
April 1, 1988

Uniform Federal Accessibility Standards

GENERAL SERVICES ADMINISTRATION

DEPARTMENT OF DEFENSE

DEPARTMENT OF HOUSING AND URBAN DEVELOPMENT

U.S. POSTAL SERVICE

AMSC N/A

AREA FACR

DISTRIBUTION STATEMENT A. Approved for public release; distribution is unlimited.

TABLE OF CONTENTS

UNIFORM FEDERAL ACCESSIBILITY STANDARDS

INTRODUCTION 1

1. PURPOSE 2

2. GENERAL 2

2.1 Authority 2
2.2 Provisions for Adults 2

3. MISCELLANEOUS INSTRUCTIONS AND DEFINITIONS 2

3.1 Graphic Conventions 2
3.2 Dimensional Tolerances 2
3.3 Notes 2
3.4 General Terminology 2
3.5 Definitions 3

4. ACCESSIBLE ELEMENTS AND SPACES: SCOPE AND TECHNICAL REQUIREMENTS 4

4.1 Minimum Requirements 4

4.1.1 Accessible Sites and Exterior Facilities: New Construction 4
4.1.2 Accessible Buildings: New Construction 5
4.1.3 Accessible Housing 7
4.1.4 Occupancy Classifications 7
4.1.5 Accessible Buildings: Additions 11
4.1.6 Accessible Buildings: Alterations 12
4.1.7 Accessible Buildings: Historic Preservation 13

4.2 Space Allowances and Reach Ranges 14
4.3 Accessible Route 15
4.4 Protruding Objects 20
4.5 Ground and Floor Surfaces 22
4.6 Parking and Passenger Loading Zones 23
4.7 Curb Ramps 24
4.8 Ramps 25
4.9 Stairs 27
4.10 Elevators 30
4.11 Platform Lifts 33
4.12 Windows 33
4.13 Doors 33
4.14 Entrances 36
4.15 Drinking Fountains and Water Coolers 36
4.16 Water Closets 37
4.17 Toilet Stalls 38
4.18 Urinals 40
4.19 Lavatories and Mirrors 40
4.20 Bathtubs 40
4.21 Shower Stalls 42
4.22 Toilet Rooms 43
4.23 Bathrooms, Bathing Facilities, and Shower Rooms 44
4.24 Sinks 44
4.25 Storage 44

TABLE OF CONTENTS

UNIFORM FEDERAL ACCESSIBILITY STANDARDS

4.26 Handrails, Grab Bars, Tub and Shower Seats 45
4.27 Controls and Operating Mechanisms 45
4.28 Alarms 45
4.29 Tactile Warnings 46
4.30 Signage 47
4.31 Telephones 47
4.32 Seating, Tables, and Work Surfaces 48
4.33 Assembly Areas 49
4.34 Dwelling Units 49

5. RESTAURANTS AND CAFETERIAS. 57

6. HEALTH CARE. 57

7. MERCANTILE. 57

8. LIBRARIES. 58

9. POSTAL FACILITIES. 58

APPENDIX 60

ARCHITECTURAL BARRIERS ACT OF 1968 AS AMENDED 69

INDEX 70

UNIFORM FEDERAL ACCESSIBILITY STANDARDS

INTRODUCTION

GENERAL SERVICES ADMINISTRATION

DEPARTMENT OF DEFENSE

DEPARTMENT OF HOUSING AND URBAN DEVELOPMENT

U.S. POSTAL SERVICE

This document presents uniform standards for the design, construction, and alteration of buildings so that physically handicapped persons will have ready access to and use of them in accordance with the Architectural Barriers Act, 42 U.S.C. 4151-4157. The document embodies an agreement to minimize the differences between the standards previously used by four agencies (the General Services Administration, the departments of Housing and Urban Development and Defense, and the United States Postal Service) that are authorized to issue standards under the Architectural Barriers Act, and between those standards and the access standards recommended for facilities that are not federally funded or constructed.

The four standard-setting agencies establish and enforce standards for design, construction, and alteration of particular types of buildings and facilities. The General Services Administration (GSA) prescribes standards for all buildings subject to the Architectural Barriers Act that are not covered by standards issued by the other three standard-setting agencies; the Department of Defense (DoD) prescribes standards for DoD installations; the Department of Housing and Urban Development (HUD) prescribes standards for residential structures covered by the Architectural Barriers Act except those funded or constructed by DoD; and the U.S. Postal Service (USPS) prescribes standards for postal facilities. Each of the four agencies issues standards in accordance with its statutory authority.

To ensure compliance with the standards, Congress established the Architectural and Transportation Barriers Compliance Board (ATBCB) in Section 502 of the Rehabilitation Act of 1973 (the Rehabilitation Act), 29 U.S.C. 792. The ATBCB is composed of members representing eleven Federal agencies (the four standard-setting agencies; the departments of Education, Health and Human Services, Interior, Justice, Labor, and Transportation; and the Veterans Administration) and eleven members appointed by the President from the general public. A 1978 amendment to Section 502 of the Rehabilitation Act added to the ATBCB's functions the responsibility to issue minimum guidelines (Guidelines) and requirements for the standards established by the four standard-setting agencies. The final rule that established the Guidelines now in effect was published in the *Federal Register* on August 4, 1982 (47 FR 33862) and is codified at 36 CFR part 1190.

The four standard-setting agencies determined that the uniform standards adopted by them would, as much as possible, not only comply with the Guidelines adopted by the ATBCB but also be consistent with the standards published by the American National Standards Institute (ANSI) for general use. ANSI is a nongovernmental national organization that publishes a wide variety of recommended standards. ANSI's standards for barrier-free design are developed by a committee made up of 52 organizations representing associations of handicapped people, rehabilitation professionals, design professionals, builders, and manufacturers. The standards, which are called ANSI A117.1, "Specifications for Making Buildings and Facilities Accessible to, and Usable by, Physically Handicapped People," are developed using the consensus process. The original ANSI A117.1, adopted in 1961, formed the technical basis for the first accessibility standards adopted by the federal government and most state governments. The current edition, ANSI A117.1-1980, is based on research funded by HUD. It has generally been accepted by the private sector and has been recommended for use in model state and local building codes by the Council of American Building Officials.

In keeping with the objective of uniformity between federal requirements and those commonly applied by state and local governments, the Uniform Federal Accessibility Standards (UFAS) follows ANSI A117.1-1980 in format. Both the UFAS scope provisions, which establish the minimum number of elements and spaces required to comply with standards, and the UFAS technical requirements meet or exceed the comparable provisions of the Guidelines.

The UFAS was published in the *Federal Register* on August 7, 1984 (49 FR 31528). Each of the standard-setting agencies has taken action in accordance with its own procedures, including internally prescribed rulemaking and the Administrative Procedure Act where applicable, to incorporate the UFAS in its own standards, regulations, or other directives. GSA adopted the UFAS in 41 CFR 101-19.6, effective August 7, 1984. HUD adopted the UFAS in 24 CFR part 40, effective October 4, 1984. USPS adopted the UFAS in Handbook*RE-4, "Standards for Facility Accessibility by the Physically Handicapped," effective November 15, 1984. DoD adopted the UFAS by revising Chapter 18 of DoD 4270.1-M, "Construction Criteria," by memorandum dated May 8,1985.

For further information contact:

Kathleen Fields, General Services Administration, 18th and F Streets, N.W., Room 3044, Washington, D.C. 20405, (202) 566-0038.

Judith Gilliom, Department of Defense, Office of the Deputy Assistant Secretary of Defense (Equal Opportunity), Room 3E317, The Pentagon, Washington, D.C. 20301, (202) 697-8661.

Margaret Milner, Department of Housing and Urban Development, 451 7th Street, S.W., Room 9220, Washington, D.C. 20410, (202) 755-6454.

Melinda Hulsey, Real Estate and Buildings Department, U.S. Postal Service, 475 L'Enfant Plaza West, S.W., Washington, D.C. 20260-6424, (202) 268-3139.

For TDD communication, call Margaret Milner, (202) 426-6030. These are not toll-free numbers.

*Handbook RE-4 was amended effective April 16, 1986, by the addition of Interim Standards, Section 4.1.8, "Accessible Buildings: Leasing of Space in Existing Buildings." While Handbook RE-4 is based on UFAS, Handbook RE-4, not UFAS, sets forth the governing standards for Postal Service facility accessibility. Handbook RE-4 may be further amended.

1. PURPOSE.

This document sets standards for facility accessibility by physically handicapped persons for Federal and federally-funded facilities. These standards are to be applied during the design, construction, and alteration of buildings and facilities to the extent required by the Architectural Barriers Act of 1968, as amended.

The technical provisions of these standards are the same as those of the American National Standard Institute's document A117.1-1980, except as noted in this text and on figures by italics.

2. GENERAL.

2.1 Authority. *These standards were jointly developed by the General Services Administration, the Department of Housing and Urban Development, the Department of Defense, and the United States Postal Service, under the authority of sections 2, 3, 4, and 4a, respectively, of the Architectural Barriers Act of 1968, as amended, Pub. L. No. 90-480, 42 U.S.C. 4151-4157.*

2.2 Provisions For Adults. The specifications in *these standards* are based upon adult dimensions and anthropometrics.

3. MISCELLANEOUS INSTRUCTIONS AND DEFINITIONS.

3.1 Graphic Conventions. Graphic conventions are shown in Table 1. Dimensions that are not marked "minimum" or "maximum" are absolute, unless otherwise indicated in the text or captions.

3.2 Dimensional Tolerances. All dimensions are subject to conventional building industry tolerances for field conditions.

3.3 Notes. The text of *these standards* does not contain notes or footnotes. Additional information, explanations, and advisory materials are located in the Appendix. Paragraphs marked with an asterisk have related, nonmandatory material in the Appendix. In the Appendix, the corresponding paragraph numbers are preceded by an A.

3.4 General Terminology.

comply with. Meet one or more specifications of this standard.

if, if...then. Denotes a specification that applies only when the conditions described are present.

may. Denotes an option or alternative.

Table 1
Graphic Conventions

Convention	Description
36 / 915	Typical dimension line showing U.S. customary units (in inches) above the line and SI units (in millimeters) below
9 / 230	Dimensions for short distances indicated on extended line
9 / 230 36 / 915	Dimension line showing alternate dimensions required
	Direction of approach
max	Maximum
min	Minimum
	Boundary of clear floor area
℄	Centerline

shall. Denotes a mandatory specification or requirement.

should. Denotes an advisory specification or recommendation.

3.5 Definitions. The following terms shall, for the purpose of *these standards*, have the meaning indicated in this section.

Access Aisle. An accessible pedestrian space between elements, such as parking spaces, seating, and desks, that provides clearances appropriate for use of the elements.

Accessible. Describes a site, building, facility, or portion thereof that complies with *these standards* and that can be approached, entered, and used by physically disabled people.

Accessible Element. An *element* specified by *these standards* (for example, telephone, controls, and the like).

Accessible Route. A continuous unobstructed path connecting all accessible elements and spaces in a building or facility. Interior accessible routes may include corridors, floors, ramps, elevators, lifts, and clear floor space at fixtures. Exterior accessible routes may include parking access aisles, curb ramps, walks, ramps, and lifts.

Accessible Space. Space that complies with these standards.

Adaptability. The ability of certain building *spaces and* elements, such as kitchen counters, sinks, and grab bars, to be *added or* altered so as to accommodate the needs of either disabled or nondisabled *persons*, or to accommodate the needs of persons with different types or degrees of disability.

Addition. An expansion, extension, or increase in the gross floor area of a building or facility.

Administrative Authority. A governmental agency that adopts or enforces regulations and standards for the design, construction, or alteration of buildings and facilities.

Alteration. As applied to a building or structure, means a change or rearrangement in the structural parts or elements, or in the means of egress or in moving from one location or position to another. It does not include normal maintenance, repair, reroofing, interior decoration, or changes to mechanical and electrical systems.

Assembly Area. A room or space accommodating fifty or more individuals for religious, recreational, educational, political, social, or amusement purposes, or for the consumption of food and drink, including all connected rooms or spaces with a common means of egress and ingress. Such areas as conference rooms would have to be accessible in accordance with other parts of this standard but would not have to meet all of the criteria associated with assembly areas.

Automatic Door. A door equipped with a power-operated mechanism and controls that open and close the door automatically upon receipt of a momentary actuating signal. The switch that begins the automatic cycle may be a photoelectric device, floor mat, or manual switch mounted on or near the door itself (see power-assisted door).

Circulation Path. An exterior or interior way of passage from one place to another for pedestrians, including, but not limited to, walks, hallways, courtyards, stairways, and stair landings.

Clear. Unobstructed.

Common Use. Refers to those interior and exterior rooms, spaces, or elements that are made available for the use of a restricted group of people (for example, residents of an apartment building, the occupants of an office building, or the guests of such residents or occupants).

Cross Slope. The slope that is perpendicular to the direction of travel (see running slope).

Curb Ramp. A short ramp cutting through a curb or built up to it.

Dwelling Unit. A single unit of residence which provides a kitchen or food preparation area, in addition to rooms and spaces for living, bathing, sleeping, and the like. A single family home is a dwelling unit, and dwelling units are to be found in such housing types as townhouses and apartment buildings.

Egress, Means of. *An accessible route* of exit that meets all applicable code specifications of the regulatory building agency having jurisdiction over the building or facility.

Element. An architectural or mechanical component of a building, facility, space, or site, e.g., telephone, curb ramp, door, drinking fountain, seating, water closet.

Entrance. Any access point to a building or portion of building or facility used for the purpose of entering. An entrance includes the approach walk, the vertical access leading to the entrance platform, the entrance platform itself, vestibules if provided, the entry door(s) or gate(s), and the hardware of the entry door(s) or gate(s). The principal entrance of a building or facility is the main door through which most people enter.

Essential Features. Those elements and spaces that make a building or facility usable by, or serve the needs of, its occupants or users. Essential features include but are not limited to entrances, toilet rooms, and accessible routes. Essential features do not include those spaces that house the major activities for which the building or facility is intended, such as classrooms and offices.

Extraordinary Repair. The replacement or renewal of any element of an existing building or facility for purposes other than normal maintenance.

3.5 Definitions

Facility. All or any portion of a building, structure, or area, including the site on which such building, structure or area is located, wherein specific services are provided or activities performed.

Full and Fair Cash Value. Full and fair cash value is calculated for the estimated date on which work will commence on a project and means:

(1) The assessed valuation of a building or facility as recorded in the assessor's office of the municipality and as equalized at one hundred percent (100%) valuation, or
(2) The replacement cost, or
(3) The fair market value.

Functional Spaces. The rooms and spaces in a building or facility that house the major activities for which the building or facility is intended.

Housing. A building, facility, or portion thereof, excluding inpatient health care facilities, that contains one or more dwelling units or sleeping accommodations. Housing may include, but is not limited to, one and two-family dwellings, apartments, group homes, hotels, motels, dormitories, and mobile homes.

Marked Crossing. A crosswalk or other identified path intended for pedestrian use in crossing a vehicular way.

Multifamily Dwelling. Any building containing more than two dwelling units.

Operable Part. A part of a piece of equipment or appliance used to insert or withdraw objects, or to activate, deactivate, or adjust the equipment or appliance (for example, coin slot, pushbutton, handle).

Physically Handicapped. An individual who has a physical impairment, including impaired sensory, manual, or speaking abilities, which results in a functional limitation in access to and use of a building or facility.

Power-assisted Door. A door *used for human passage* with a mechanism that helps to open the door, or relieve the opening resistance of a door, upon the activation of a switch or a continued force applied to the door itself. If the switch or door is released, such doors immediately begin to close or close completely within 3 to 30 seconds (see automatic door).

Public Use. Describes interior or exterior rooms or spaces that are made available to the general public. Public use may be provided at a building or facility that is privately or publicly owned.

Ramp. A walking surface in an accessible space that has a running slope greater than 1:20.

Running Slope. The slope that is parallel to the direction of travel (see cross slope).

Service Entrance. An entrance intended primarily for delivery of services.

Signage. Verbal, symbolic, *tactile*, and pictorial information.

Site. A parcel of land bounded by a property line or a designated portion of a public right-of-way.

Site Improvement. Landscaping, paving for pedestrian and vehicular ways, outdoor lighting, recreational facilities, and the like, added to a site.

Sleeping Accommodations. Rooms in which people sleep, for example, dormitory and hotel or motel guest rooms.

Space. A definable area, e.g., toilet room, hall, assembly area, entrance, storage room, alcove, courtyard, or lobby.

Structural Impracticability. Changes having little likelihood of being accomplished without removing or altering a load-bearing structural member and/or incurring an increased cost of 50 percent or more of the value of the element of the building or facility involved.

Tactile. Describes an object that can be perceived using the sense of touch.

Tactile Warning. A standardized surface texture applied to or built into walking surfaces or other elements to warn visually impaired people of hazards in the path of travel.

Temporary. Applies to facilities that are not of permanent construction but are extensively used or essential for public use for a given (short) period of time, for example, temporary classrooms or classroom buildings at schools and colleges, or facilities around a major construction site to make passage accessible, usable, and safe for everybody. Structures directly associated with the actual processes of major construction, such as porto potties, scaffolding, bridging, trailers, and the like, are not included. *Temporary as applied to elements means installed for less than 6 months and not required for safety reasons.*

Vehicular Way. A route intended for vehicular traffic, such as a street, driveway, or parking lot.

Walk. An exterior pathway with a prepared surface intended for pedestrian use, including general pedestrian areas such as plazas and courts.

4. ACCESSIBLE ELEMENTS AND SPACES: SCOPE AND TECHNICAL REQUIREMENTS.

4.1 Minimum Requirements.

4.1.1 Accessible Sites and Exterior Facilities: *New Construction.* An accessible site shall meet the following minimum requirements:

(1) At least one accessible route complying with 4.3 shall be provided *within the boundary of the site* from public transportation stops, accessible parking

4.1.2 Accessible Buildings: New Construction

spaces, passenger loading zones if provided, and public streets or sidewalks to an accessible building entrance.

(2) At least one accessible route complying with 4.3 shall connect accessible buildings, facilities, elements, and spaces that are on the same site.

(3) All objects that protrude from surfaces or posts into circulation paths shall comply with 4.4.

(4) Ground surfaces along accessible routes and in accessible spaces shall comply with 4.5.

(5) (a) *If parking spaces are provided for employees or visitors, or both, then accessible spaces, complying with 4.6, shall be provided in each such parking area in conformance with the following table:*

Total Parking in Lot	*Required Minimum Number of Accessible Spaces*
1 to 25	*1*
26 to 50	*2*
51 to 75	*3*
76 to 100	*4*
101 to 150	*5*
151 to 200	*6*
201 to 300	*7*
301 to 400	*8*
401 to 500	*9*
501 to 1000	*
1001 and over	**

* *2 percent of total.*
** *20 plus 1 for each 100 over 1000.*

EXCEPTION: The total number of accessible parking spaces may be distributed among parking lots, if greater accessibility is achieved.

EXCEPTION: This does not apply to parking provided for official government vehicles owned or leased by the government and used exclusively for government purposes.

(b) *If passenger loading zones are provided, then at least one passenger loading zone shall comply with 4.6.5.*

(c) *Parking spaces for side lift vans are accessible parking spaces and may be used to meet the requirements of this paragraph.*

(d) *Parking spaces at accessible housing complying with 4.6 shall be provided in accordance with the following:*

(i) Where parking is provided for all residents, one accessible parking space shall be provided for each accessible dwelling unit; and

(ii) Where parking is provided for only a portion of the residents, an accessible parking space shall be provided on request of the occupant of an accessible dwelling unit;

(iii) Where parking is provided for visitors, 2 percent of the spaces, or at least one, shall be accessible.

(e) *Parking spaces at health care facilities complying with 4.6 shall be provided in accordance with the following:*

(i) General health care facilities, employee and visitor parking: Comply with Table 4.1.1(5)(a);

(ii) Outpatient facilities: 10 percent of the total number of parking spaces provided;

(iii) Spinal cord injury facilities, employee and visitor parking: 20 percent of total parking spaces provided.

(6) *If toilet facilities are provided on a site, then each such public or common use toilet facility shall comply with 4.22. If bathing facilities are provided on a site, then each such public or common use bathing facility shall comply with 4.23.*

EXCEPTION: These provisions are not mandatory for single user portable toilet or bathing units clustered at a single location; however, at least one toilet unit complying with 4.22 or one bathing unit complying with 4.23 should be installed at each location whenever standard units are provided.

* (7) All signs shall comply with 4.30. *Elements and spaces of accessible facilities which shall be identified by the International Symbol of Accessibility are:*

(a) Parking spaces designated as reserved for physically handicapped people;
(b) passenger loading zones;
(c) accessible entrances;
(d) accessible toilet and bathing facilities.

4.1.2 Accessible Buildings: ***New Construction.*** Accessible buildings and facilities shall meet the following minimum requirements:

(1) At least one accessible route complying with 4.3 shall connect accessible building or facility entrances with all accessible spaces and elements within the building or facility.

(2) All objects that overhang circulation paths shall comply with 4.4.

(3) Ground and floor surfaces along accessible routes and in accessible rooms and spaces shall comply with 4.5.

(4) Stairs connecting levels that are not connected by an elevator shall comply with 4.9.

(5) *One passenger elevator complying with 4.10 shall serve each level in all multi-story buildings and facilities. If more than one elevator is provided, each elevator shall comply with 4.10.*

* Amendments issued on 3/28/89 appear on Page 152, App. IV

4.1.2 Accessible Buildings: New Construction

EXCEPTION: Elevator pits, elevator penthouses, mechanical rooms, piping or equipment catwalks are excepted from this requirement.

EXCEPTION: Accessible ramps complying with 4.8 or, if no other alternative is feasible, accessible platform lifts complying with 4.11 may be used in lieu of an elevator.

(6) Windows. *(Reserved).*

(7) Doors:

(a) *At each accessible entrance to a building or facility, at least one door shall comply with 4.13.*

(b) *Within a building or facility, at least one door at each accessible space shall comply with 4.13.*

(c) *Each door that is an element of an accessible route shall comply with 4.13.*

(d) *Each door required by 4.3.10, Egress, shall comply with 4.13.*

EXCEPTION: In multiple-story buildings and facilities where at-grade egress from each floor is impossible, either of the following is permitted: the provision within each story of approved fire and smoke partitions that create horizontal exits, or, the provision within each floor of areas of refuge approved by agencies having authority for safety.

(8) *At least one principal entrance at each grade floor level to a building or facility shall comply with 4.14, Entrances. When a building or facility has entrances which normally serve any of the following functions: transportation facilities, passenger loading zones, accessible parking facilities, taxi stands, public streets and sidewalks, or accessible interior vertical access, then at least one of the entrances serving each such function shall comply with 4.14, Entrances. Because entrances also serve as emergency exits, whose proximity to all parts of buildings and facilities is essential, it is preferable that all or most exits be accessible.*

(9) *If drinking fountains or water coolers are provided, approximately 50 percent of those provided on each floor shall comply with 4.15 and shall be on an accessible route. If only one drinking fountain or water cooler is provided on any floor, it shall comply with 4.15.*

(10) If toilet facilities are provided, *then each public and common use* toilet room shall comply with 4.22. *Other toilet rooms shall be adaptable.* If bathing facilities are provided, *then each public and common use* bathroom shall comply with 4.23. *Accessible toilet rooms and bathing facilities shall be on an accessible route.*

(11) If storage facilities such as cabinets, shelves, closets, and drawers are provided in accessible spaces, *at least one of each type provided shall contain storage space complying with 4.25. Additional storage may be provided outside of the dimensions shown in Fig. 38.*

(12) Controls and operating mechanisms in accessible spaces, along accessible routes, or as parts of accessible elements (for example, light switches and dispenser controls) shall comply with 4.27.

(13) *If emergency warning systems are provided, then they shall include both audible alarms complying with 4.28.2 and visual alarms complying with 4.28.3. In facilities with sleeping accommodations, the sleeping accommodations shall have an alarm system complying with 4.28.4. Emergency warning systems in health care facilities may be modified to suit standard health care alarm design practice.*

(14) Tactile warnings shall be provided at hazardous conditions as specified in *4.29.3.*

* (15) If signs are provided, they shall comply with 4.30. *In addition, permanent signage that identifies rooms and spaces shall also comply with 4.30.4 and 4.30.6.*

EXCEPTION: The provisions of 4.30.4 are not mandatory for temporary information on room and space signage, such as current occupant's name, provided the permanent room or space identification complies with 4.30.4.

(16) Public telephones:

(a) If public telephones are provided, *then accessible public telephones shall comply with 4.31, Telephones, and the following table.*

Number of public telephones provided on each floor:	*Number of telephones required to be accessible:**
1 or more single unit installations	*1 per floor*
*1 bank***	*1 per floor*
*2 or more banks***	*1 per bank. Accessible unit may be installed as a single unit in proximity (either visible or with signage) to the bank. At least one public telephone per floor shall meet the requirements for a forward reach telephone.****

**Additional public telephones may be installed at any height. Unless otherwise specified, accessible telephones may be either forward or side reach telephones.*

***A bank consists of two or more adjacent public telephones, often installed as a unit.*

*** Amendments issued on 3/28/89 appear on Page 152, App. IV.**

***EXCEPTION: For exterior installations only, if dial tone first service is not available, then a side reach telephone may be installed instead of the required forward reach telephone (i.e., one telephone in proximity to each bank shall comply with 4.31).*

(b) At least one of the public telephones complying with 4.31, Telephones, shall be equipped with a volume control. The installation of additional volume controls is encouraged, and these may be installed on any public telephone provided.

(17) If *fixed or built-in* seating, tables, or work surfaces are provided in accessible spaces, *at least 5 percent*, but always at least one, of seating spaces, tables, or work surfaces shall comply with 4.32.

(18) Assembly areas:

(a) If places of assembly are provided, they shall comply with *the following table:*

Capacity of Seating & Assembly Areas	*Number of Required Wheelchair Locations*
50 to 75	*3*
76 to 100	*4*
101 to 150	*5*
151 to 200	*6*
201 to 300	*7*
301 to 400	*8*
401 to 500	*9*
501 to 1,000	*
over 1,000	**

* *2 percent of total.*
** *20 plus 1 for each 100 over 1,000.*

(b) *Assembly areas with audio-amplification systems shall have a listening system complying with 4.33 to assist a reasonable number of people, but no fewer than two, with severe hearing loss. For assembly areas without amplification systems and for spaces used primarily as meeting and conference rooms, a permanently installed or portable listening system shall be provided. If portable systems are used for conference or meeting rooms, the system may serve more than one room.*

4.1.3 Accessible Housing. Accessible housing shall comply with the requirements *of 4.1 and 4.34 except as noted below:*

(1) *Elevators:* *Where provided, elevators shall comply with 4.10. Elevators or other accessible means of vertical movement are not required in residential facilities when:*

(a) No accessible dwelling units are located above or below the accessible grade level; and

(b) At least one of each type of common area and amenity provided for use of residents and visitors is available at the accessible grade level.

(2) *Entrances:* *Entrances complying with 4.14 shall be provided as necessary to achieve access to and egress from buildings and facilities.*

EXCEPTION: In projects consisting of one-to-four family dwellings where accessible entrances would be extraordinarily costly due to site conditions or local code restrictions, accessible entrances are required only to those buildings containing accessible dwelling units.

(3) *Common Areas:* *At least one of each type of common area and amenity in each project shall be accessible and shall be located on an accessible route to any accessible dwelling unit.*

4.1.4 *Occupancy Classifications.* *Buildings and facilities shall comply with these standards to the extent noted in this section for various occupancy classifications, unless otherwise modified by a special application section. Occupancy classifications, and the facilities covered under each category include, but are not necessarily limited to, the listing which follows:*

(1) *General Exceptions.* *Accessibility is not required to elevator pits, elevator penthouses, mechanical rooms, piping or equipment catwalks, lookout galleries, electrical and telephone closets, and general utility rooms.*

(2) *Military Exclusions.* *The following facilities need not be designed to be accessible, but accessibility is recommended since the intended use of the facility may change with time.*

(a) *Unaccompanied personnel housing, closed messes, vehicle and aircraft maintenance facilities, where all work is performed by able-bodied military personnel, and, in general, all facilities which are intended for use or occupancy by able-bodied military personnel only.*

(b) *Those portions of Reserve and National Guard facilities which are designed and constructed primarily for use by able-bodied military personnel. This exclusion does not apply to those portions of a building or facility which may be open to the public or which may be used by the public during the conduct of normal business or which may be used by physically handicapped persons employed or seeking employment at such building or facility. These portions of the building or facility shall be accessible.*

(c) *Where the number of accessible spaces required is determined by the design capacity of a facility (such as parking or assembly areas), the number of able-bodied military persons used in determining the design capacity need not be counted when computing the number of accessible spaces required.*

(3) *Military Housing.* *In the case of military housing, which is primarily available for able-bodied military personnel and their dependents, at least 5*

4.1.4 Occupancy Classifications

percent of the total but at least one unit (on an installation-by-installation basis) of all housing constructed will be designed and built to be either accessible or readily and easily modifiable to be accessible, but in any event, modification of individual units (including the making of adaptations), will be accomplished on a high priority basis when a requirement is identified. Common areas such as walks, streets, parking and play areas, and common entrances to multi-unit facilities shall be designed and built to be accessible.

(4) Assembly. *Assembly occupancy includes, among others, the use of a building or structure, or a portion thereof, for the gathering together of persons for purposes such as civic, social or religious functions, recreation, food or drink consumption, or awaiting transportation. A room or space used for assembly purposes by less than fifty (50) persons and accessory to another occupancy shall be included as a part of that major occupancy. For purposes of these standards, assembly occupancies shall include the following:*

Facilities	Application
Amusement arcades Amusement park structures Arenas Armories Art galleries Auditoriums Banquet halls Bleachers Bowling alleys Carnivals Churches Clubs Community halls Courtrooms (public areas) Dance halls Drive-in theaters Exhibition halls Fairs Funeral parlors Grandstands Gymnasiums Motion picture theaters Indoor & outdoor swimming pools Indoor & outdoor tennis courts Lecture halls Libraries* Museums Night clubs Passenger stations Pool & billiard halls Restaurants** Skating rinks Stadiums Taverns & bars Television studios admitting audiences Theaters	All areas for which the intended use will require public access or which may result in employment of physically handicapped persons.

*See Part 8 for special applications.
**See Part 5 for special applications.

(5) Business. *Business occupancy includes, among others, the use of a building or structure, or a portion thereof, for office, professional or service type transactions, including storage of records and accounts.*

Facilities	Application
Animal hospitals, kennels, pounds Automobile and other motor vehicle showrooms Banks Barber shops Beauty shops Car wash Civic administration Clinic, outpatient Dry cleaning Educational above 12th grade Electronic data processing Fire stations Florists & nurseries Laboratories: testing & research Laundries Motor vehicle service stations Police stations Post offices* Print shops Professional services: attorney, dentist, physician, engineer, etc. Radio & T.V. stations Telephone exchanges	All areas for which the intended use will require public access or which may result in employment of physically handicapped persons.

*See Part 9 for special applications.

(6) Educational. *Educational occupancy includes, among others, the use of a building or structure, or portion thereof, by six or more persons at any time for educational purposes through the 12th grade.*

Schools for business or vocational training shall conform to the requirements of the trade, vocation or business taught.

4.1.4 Occupancy Classifications

Facilities	Application
Academies Kindergarten Nursery schools Schools	All areas shall comply.

(7) Factory Industrial. Factory industrial occupancy includes, among others, the use of a building or structure, or portion thereof, for assembling, disassembling, fabricating, finishing, manufacturing, packaging, processing or other operations that are not classified as a Hazardous Occupancy.

Facilities	Application
Aircraft Appliances Athletic equipment Automobile and other motor vehicle Bakeries Beverages Bicycles Boats, building Brick and masonry Broom or brush Business machines Canvas or similar Cameras and photo equipment Carpets & rugs, including cleaning Ceramic products Clothing Construction & agricultural machinery Disinfectants Dry cleaning & dyeing Electronics Engines, including rebuilding Film, photographic Food processing Foundries Furniture Glass products Gypsum Hemp products Ice Jute products Laundries Leather products Machinery Metal Motion pictures & television film Musical instruments Optical goods Paper products Plastic products	All areas for which the intended use will require public access or which may result in employment of physically handicapped persons.
Printing or publishing Recreational vehicles Refuse incineration Shoes Soaps & detergents Steel products: fabrication, assembly Textiles Tobacco Trailers Upholstering Wood, distribution Millwork Woodworking, cabinet Postal mail: processing facilities*	All areas for which the intended use will require public access or which may result in employment of physically handicapped persons.

*See Part 9 for special applications.

(8) Hazardous. Hazardous occupancy includes, among others, the use of a building or structure, or a portion thereof, that involves the manufacturing, processing, generation or storage of corrosive, highly toxic, highly combustible, flammable or explosive materials that constitute a high fire or explosive hazard, including loose combustible fibers, dust and unstable materials.

Facilities	Application
Combustible dust Combustible fibers Combustible liquid Corrosive liquids Explosive material Flammable gas Flammable liquid Liquified petroleum gas Nitromethane Oxidizing materials Organic peroxide	All areas for which the intended use will require public access or which may result in employment of physically handicapped persons.

(9) Institutional. Institutional occupancy includes, among others, the use of a building or structure, or any portion thereof, in which people have physical or medical treatment or care, or in which the liberty of the occupants is restricted. Institutional occupancies shall include the following subgroups:

(a) Institutional occupancies for the care of children, including:

Facilities	Application
Child care facilities	All public use, common use, or areas which may result in employment of physically handicapped persons.

4.1.4 Occupancy Classifications

(b) Institutional occupancies used for medical or other treatment or care of persons, some of whom are suffering from physical or mental illness, disease or infirmity, including:

Facilities	Application
Long Term Care Facilities: (including Skilled Nursing Facilities, Intermediate Care Facilities, Bed & Care, and Nursing Homes).	At least 50 percent of patient toilets and bedrooms; all public use, common use or areas which may result in employment of physically handicapped persons.
Outpatient Facilities:	All patient toilets and bedrooms, all public use, common use, or areas which may result in employment of physically handicapped persons.
Hospital*:	
General Purpose Hospital:	At least 10 percent of patient toilets and bedrooms, all public use, common use, or areas which may result in employment of physically handicapped persons.
Special Purpose Hospital: (Hospitals that treat conditions that affect mobility).	All patient toilets and bedrooms, all public use, common use, or areas which may result in employment of physically handicapped persons.

* See Part 6 for special applications.

(c) Institutional occupancies where the occupants are under some degree of restraint or restriction for security reasons including:

Facilities	Application
Jails Prisons Reformatories Other detention or correctional facilities	5 percent of residential units available, or at least one unit, whichever is greater; all common use, visitor use, or areas which may result in employment of physically handicapped persons.

(10) Mercantile. Mercantile occupancy includes, among others, all buildings and structures or parts thereof, for the display and sale of merchandise, and involving stocks of goods, wares or merchandise incidental to such purposes and accessible to the public.*

Facilities	Application
Department stores Drug stores Markets Retail stores Shopping centers Sales rooms	All areas for which the intended use will require public access or which may result in employment of physically handicapped persons.

* See Part 7 for special applications.

***(11) Residential.** Residential occupancy includes, among others, the use of a building or structure, or portion thereof, for sleeping accommodations when not classed as an institutional occupancy. Residential occupancies shall comply with the requirements of 4.1 and 4.34 except as follows:*

(a) Residential occupancies where the occupants are primarily transient in nature (less than 30 days) including:

Facilities	Application
Hotels Motels Boarding houses	5 percent of the total units, or at least one, whichever is greater, and all public use, common use, and areas which may result in employment of physically handicapped persons.

(b) Residential occupancies in multiple dwellings where the occupants are primarily permanent in nature, including:

Facilities	Application
Multifamily housing (Apartment houses):	
Federally assisted	5 percent of the total, or at least one unit, whichever is greater, in projects of 15 or more dwelling units, or as determined by the appropriate Federal agency following a local needs assessment conducted by local government bodies or states under applicable regulations.
Federally owned	5 percent of the total, or at least one unit, whichever is greater.
Dormitories	5 percent of the total, or at least one unit, whichever is greater.

(c) Residential occupancies in one (1) and two (2) family dwellings where the occupancies are primarily permanent in nature and not classified as preceding residential categories or as institutional.

Facilities	Application
One and two family dwelling:	
Federally assisted, rental	5 percent of the total, or at least one unit, whichever is greater, in projects of 15 or more dwelling units, or as determined by the appropriate Federal agency following a local needs assessment conducted by local government bodies or states under applicable regulations.
Federally assisted, homeownership	To be determined by home buyer.
Federally owned	5 percent of the total, or at least one unit, whichever is greater.

(12) Storage. *Storage occupancy includes, among others, the use of a building or structure, or portion thereof, for storage that is not classified as a Hazardous Occupancy.*

Facilities	Application
Metal desks Electrical coils Electrical motors Dry cell batteries Metal parts Empty cans Stoves Washers & Dryers Metal cabinets Glass bottles with noncombustible liquid Mirrors Foods in non-combustible containers Frozen foods Meats Fresh fruits and vegetables Dairy products Beer or wine up to 12 percent alcohol Distribution transformers	All areas for which the intended use will require public access or which may result in employment of physically handicapped persons shall comply.
Cement in bags Electrical insulators Gypsum board Inert pigments Dry insecticides	All areas for which the intended use will require public access or which may result in employment of physically handicapped persons shall comply.

(13) Utility and Miscellaneous. *Utility and miscellaneous occupancies include, among others, accessory buildings and structures, such as:*

Facilities	Application
Fences over 6 ft. high Tanks Cooling towers Retaining walls Buildings of less than 1,000 sq. ft. such as: Private garages Carports Sheds Agricultural buildings	All areas for which the intended use will require public access or which may result in employment of physically handicapped persons shall comply.

4.1.5 Accessible Buildings: Additions.

Each addition to an existing building shall comply with 4.1.1 to 4.1.4 of 4.1, Minimum Requirements, except as follows:

(1) *Entrances.* *If a new addition to a building or facility does not have an entrance, then at least one entrance in the existing building or facility shall comply with 4.1.4, Entrances.*

(2) *Accessible route.* *If the only accessible entrance to the addition is located in the existing building or facility, then at least one accessible route shall comply with 4.3, Accessible Route, and shall provide access through the existing building or facility to all rooms, elements, and spaces in the new addition.*

(3) *Toilet and bathing facilities.* *If there are no toilet rooms and bathing facilities in the addition and these facilities are provided in the existing building, then at least one toilet and bathing facility in the existing building shall comply with 4.22, Toilet Rooms, or 4.23, Bathrooms, Bathing Facilities, and Shower Rooms.*

(4) *Elements, spaces, and common areas.* *If elements, spaces, or common areas are located in the existing building and they are not provided in the addition, then consideration should be given to making those elements, spaces, and common areas accessible in the existing building.*

4.1.5 Accessible Buildings: Additions

EXCEPTIONS: Mechanical rooms, storage areas, and other such minor additions which normally are not frequented by the public or employees of the facility are excepted from 4.1.5.

(5) Housing: *(Reserved).*

4.1.6 Accessible Buildings: Alterations.

(1) General. *Alterations to existing buildings or facilities shall comply with the following:*

(a) *If existing elements, spaces, essential features, or common areas are altered, then each such altered element, space, feature, or area shall comply with the applicable provisions of 4.1.1 to 4.1.4 of 4.1, Minimum Requirements.*

(b) *If power-driven vertical access equipment (e.g., escalator) is planned or installed where none existed previously, or if new stairs (other than stairs installed to meet emergency exit requirements) requiring major structural changes are planned or installed where none existed previously, then a means of accessible vertical access shall be provided that complies with 4.7, Curb Ramps; 4.8, Ramps; 4.10, Elevators; or 4.11, Platform Lifts; except to the extent where it is structurally impracticable in transit facilities.*

(c) *If alterations of single elements, when considered together, amount to an alteration of a space of a building or facility, the entire space shall be made accessible.*

(d) *No alteration of an existing element, space, or area of a building shall impose a requirement for greater accessibility than that which would be required for new construction. For example, if the elevators and stairs in a building are being altered and the elevators are, in turn, being made accessible, then no accessibility modifications are required to the stairs connecting levels connected by the elevator.*

(e) *If the alteration work is limited solely to the electrical, mechanical, or plumbing system and does not involve the alteration of any elements and spaces required to be accessible under these standards, then 4.1.6(3) does not apply.*

(f) *No new accessibility alterations will be required of existing elements or spaces previously constructed or altered in compliance with earlier standards issued pursuant to the Architectural Barriers Act of 1968, as amended.*

(g) *Mechanical rooms and other spaces which normally are not frequented by the public or employees of the building or facility or which by nature of their use are not required by the Architectural Barriers Act to be accessible are excepted from the requirements of 4.1.6.*

(2) *Where a building or facility is vacated and it is totally altered, then it shall be altered to comply with 4.1.1 to 4.1.5 of 4.1, Minimum Requirements, except to the extent where it is structurally impracticable.*

(3) *Where substantial alteration occurs to a building or facility, then each element or space that is altered or added shall comply with the applicable provisions of 4.1.1 to 4.1.4 of 4.1, Minimum Requirements, except to the extent where it is structurally impracticable. The altered building or facility shall contain:*

(a) *At least one accessible route complying with 4.3, Accessible Route, and 4.1.6(a);*

(b) *At least one accessible entrance complying with 4.14, Entrances. If additional entrances are altered then they shall comply with 4.1.6(a); and*

(c) *The following toilet facilities, whichever is greater:*

(i) *At least one toilet facility for each sex in the altered building complying with 4.22, Toilet Rooms, and 4.23, Bathrooms, Bathing Facilities, and Shower Rooms.*

(ii) *At least one toilet facility for each sex on each substantially altered floor, where such facilities are provided, complying with 4.22, Toilet Rooms; and 4.23, Bathrooms, Bathing Facilities, and Shower Rooms.*

(d) *In making the determination as to what constitutes "substantial alteration," the agency issuing standards for the facility shall consider the total cost of all alterations (including but not limited to electrical, mechanical, plumbing, and structural changes) for a building or facility within any twelve (12) month period. For guidance in implementing this provision, an alteration to any building or facility is to be considered substantial if the total cost for this twelve month period amounts to 50 percent or more of the full and fair cash value of the building as defined in 3.5.*

EXCEPTION: If the cost of the elements and spaces required by 4.1.6(3)(a), (b), or (c) exceeds 15 percent of the total cost of all other alterations, then a schedule may be established by the standard-setting and/or funding agency to provide the required improvements within a 5-year period.

EXCEPTION: Consideration shall be given to providing accessible elements and spaces in each altered building or facility complying with:

(i) 4.6, Parking and Passenger Loading Zones,
(ii) 4.15, Drinking Fountains and Water Coolers,
(iii) 4.25, Storage,
(iv) 4.28, Alarms,
(v) 4.31, Telephones,
(vi) 4.32, Seating, Tables, and Work Surfaces,
(vii) 4.33, Assembly Areas.

(4) *Special technical provisions for alterations to existing buildings or facilities:*

(a) *Ramps. Curb ramps and ramps to be constructed on existing sites or in existing buildings or facilities may have slopes and rises as shown in Table 2 if space limitations prohibit the use of a 1:12 slope or less.*

Table 2
Allowable Ramp Dimensions for Construction in Existing Sites, Buildings, and Facilities

	Maximum Rise		Maximum Run	
Slope*	in	mm	ft	m
Steeper than 1:10 but no steeper than 1:8	3	75	2	0.6
Steeper than 1:12 but no steeper than 1:10	6	150	5	1.5

***A slope steeper than 1:8 not allowed.**

(b) *Stairs. Full extension of stair handrails shall not be required in alterations where such extensions would be hazardous or impossible due to plan configuration.*

(c) *Elevators.*

(i) *If a safety door edge is provided in existing automatic elevators, then the automatic door reopening devices may be omitted (see 4.10.6).*

(ii) *Where existing shaft or structural elements prohibit strict compliance with 4.10.9, then the minimum floor area dimensions may be reduced by the minimum amount necessary, but in no case shall they be less than 48 in by 48 in (1220 mm by 1220 mm).*

(d) *Doors.*

(i) *Where existing elements prohibit strict compliance with the clearance requirements of 4.13.5, a projection of 5/8 in (16 mm) maximum will be permitted for the latch side door stop.*

(ii) *If existing thresholds measure 3/4 in (19 mm) high or less, and are beveled or modified to provide a beveled edge on each side, then they may be retained.*

(e) *Toilet rooms. Where alterations to existing facilities make strict compliance with 4.22 and 4.23 structurally impracticable, the addition of one "unisex" toilet per floor containing one water closet complying with 4.16 and one lavatory complying with 4.19, located adjacent to existing toilet facilities, will be acceptable in lieu of making existing toilet facilities for each sex accessible.*

EXCEPTION: In instances of alteration work where provision of a standard stall (Fig. 30(a)) is structurally impracticable or where plumbing code requirements prevent combining existing stalls to provide space, an alternate stall (Fig. 30(b)) may be provided in lieu of the standard stall.

(f) Assembly areas.

(i) *In alterations where it is structurally impracticable to disperse seating throughout the assembly area, seating may be located in collected areas as structurally feasible. Seating shall adjoin an accessible route that also serves as a means of emergency egress.*

(ii) *In alterations where it is structurally impracticable to alter all performing areas to be on an accessible route, then at least one of each type shall be made accessible.*

(5) Housing. *(Reserved).*

4.1.7 *Accessible Buildings: Historic Preservation.*

(1) *Applicability.*

(a) *As a general rule, the accessibility provisions of part 4 shall be applied to "qualified" historic buildings and facilities. "Qualified" buildings or facilities are those buildings and facilities that are eligible for listing in the National Register of Historic Places, or such properties designated as historic under a statute of the appropriate state or local government body. Comments of the Advisory Council on Historic Preservation shall be obtained when required by Section 106 of the National Historic Preservation Act of 1966, as amended, 16 U.S.C. 470 and 36 CFR Part 800, before any alteration to a qualified historic building.*

(b) *The Advisory Council shall determine, on a case-by-case basis, whether provisions required by part 4 for accessible routes (exterior and interior), ramps, entrances, toilets, parking, and displays and signage, would threaten or destroy the historic significance of the building or facility.*

(c) *If the Advisory Council determines that any of the accessibility requirements for features listed in 4.1.7(1) would threaten or destroy the historic significance of a building or facility, then the special application provisions of 4.1.7(2) for that feature may be utilized. The special application provisions listed under 4.1.7(2) may only be utilized following a written determination by the Advisory Council that application of a requirement contained in part 4 would threaten or destroy the historic integrity of a qualified building or facility.*

4.1.7 Accessible Buildings: Historic Preservation

(2) *Historic Preservation: Minimum Requirements.*

(a) *At least one accessible route complying with 4.3 from a site access point to an accessible entrance shall be provided.*

EXCEPTION: A ramp with a slope no greater than 1:6 for a run not to exceed 2 ft (610 mm) may be used as part of an accessible route at an entrance.

(b) *At least one accessible entrance which is used by the public complying with 4.14 shall be provided.*

EXCEPTION: If it is determined that no entrance used by the public can comply with 4.14, then access at any entrance not used by the general public but open (unlocked) with directional signs at the primary entrance may be used.

(c) *If toilets are provided, then at least one toilet facility complying with 4.22 and 4.1.6 shall be provided along an accessible route that complies with 4.3. Such toilet facility may be "unisex" in design.*

(d) *Accessible routes from an accessible entrance to all publicly used spaces on at least the level of the accessible entrance shall be provided. Access should be provided to all levels of a building or facility in compliance with 4.1 whenever practical.*

(e) *Displays and written information, documents, etc., should be located where they can be seen by a seated person. Exhibits and signage displayed horizontally, e.g., books, should be no higher than 44 in (1120 mm) above the floor surface.*

4.2 Space Allowance and Reach Ranges

4.2.1* Wheelchair Passage Width. The minimum clear width for single wheelchair passage shall be 32 in (815 mm) at a point and 36 in (915 mm) continuously (see Fig. 1 *and 24(e)).*

4.2.2 Width for Wheelchair Passing. The minimum width for two wheelchairs to pass is 60 in (1525 mm) (see Fig. 2).

4.2.3* Wheelchair Turning Space. The space required for a wheelchair to make a 180-degree turn is a clear space of 60 in (1525 mm) diameter (see Fig. 3(a)) or a T-shaped space (see Fig. 3(b)).

4.2.4* Clear Floor or Ground Space for Wheelchairs.

4.2.4.1 Size and Approach. The minimum clear floor or ground space required to accommodate a single, stationary wheelchair occupant is 30 in by 48 in (760 mm by 1220 mm) (see Fig. 4(a)). The minimum clear floor or ground space for wheelchairs may be positioned for forward or parallel approach to an object

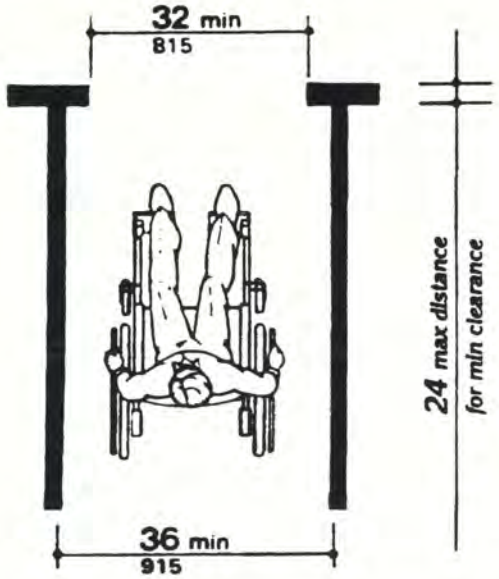

Fig. 1
Minimum Clear Width for Single Wheelchair

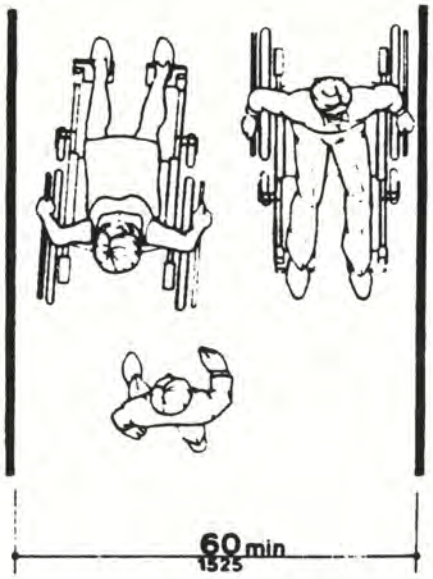

Fig. 2
Minimum Clear Width for Two Wheelchairs

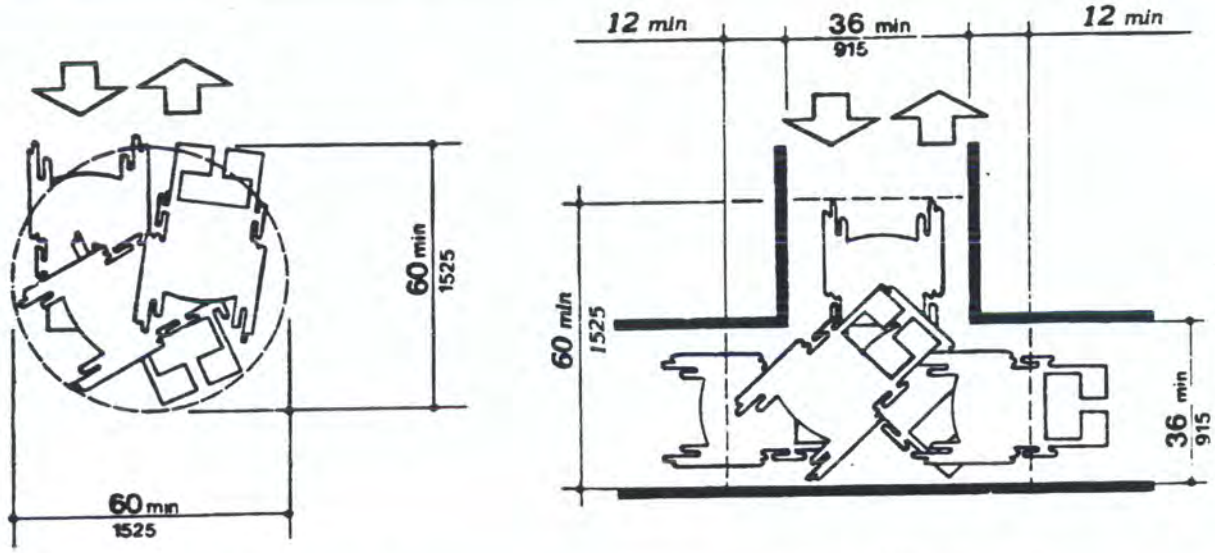

(a)
60-in (1525-mm)-Diameter Space

(b)
T-Shaped Space for 180° Turns

Fig. 3
Wheelchair Turning Space

(see Fig. 4(b) and (c)). Clear floor or ground space for wheelchairs may be part of the knee space required under some objects.

4.2.4.2 Relationship of Maneuvering Clearance to Wheelchair Spaces. One full unobstructed side of the clear floor or ground space for a wheelchair shall adjoin or overlap an accessible route or adjoin another wheelchair clear floor space. If a clear floor space is located in an alcove or otherwise confined on all or part of three sides, additional maneuvering clearances shall be provided as shown in Fig. 4(d) and (e).

4.2.4.3 Surfaces for Wheelchair Spaces. Clear floor or ground spaces for wheelchairs shall comply with 4.5.

4.2.5 Forward Reach. If the clear floor space only allows forward approach to an object, the maximum high forward reach allowed shall be 48 in (1220 mm) (see Fig. 5(a)). *The minimum low forward reach is 15 in (380 mm).* If the high forward reach is over an obstruction, reach and clearances shall be as shown in Fig. 5(b).

4.2.6* Side Reach. If the clear floor space allows parallel approach by a person in a wheelchair, the maximum high side reach allowed shall be 54 in (1370 mm) and the low side reach shall be no less than 9 in (230 mm) above the floor (Fig. 6(a) and (b)). If the side reach is over an obstruction, the reach and clearances shall be as shown in Fig. 6(c).

4.3 Accessible Route.

4.3.1* General. All walks, halls, corridors, aisles, and other spaces that are part of an accessible route shall comply with 4.3.

4.3.2 Location.

(1) At least one accessible route *within the boundary of the site* shall be provided from public transportation stops, accessible parking, and accessible passenger loading zones, and public streets or sidewalks to the accessible building entrance they serve.

(2) At least one accessible route shall connect accessible buildings, facilities, elements, and spaces that are on the same site.

(3) At least one accessible route shall connect accessible building or facility entrances with all accessible spaces and elements and with all accessible dwelling units within the building or facility.

(4) An accessible route shall connect at least one accessible entrance of each accessible dwelling unit with those exterior and interior spaces and facilities that serve the accessible dwelling unit.

4.3 Accessible Route

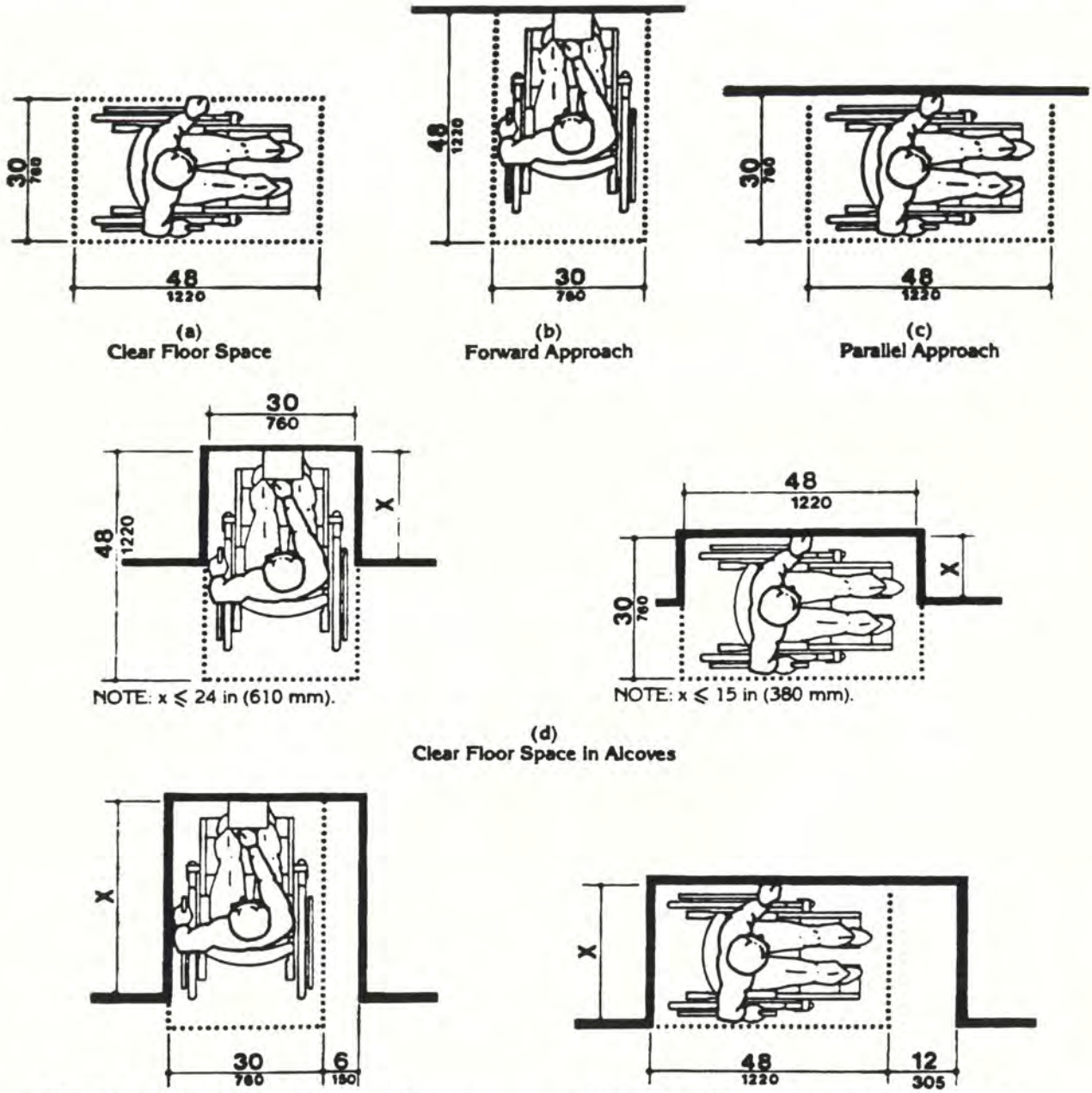

Fig. 4
Minimum Clear Floor Space for Wheelchairs

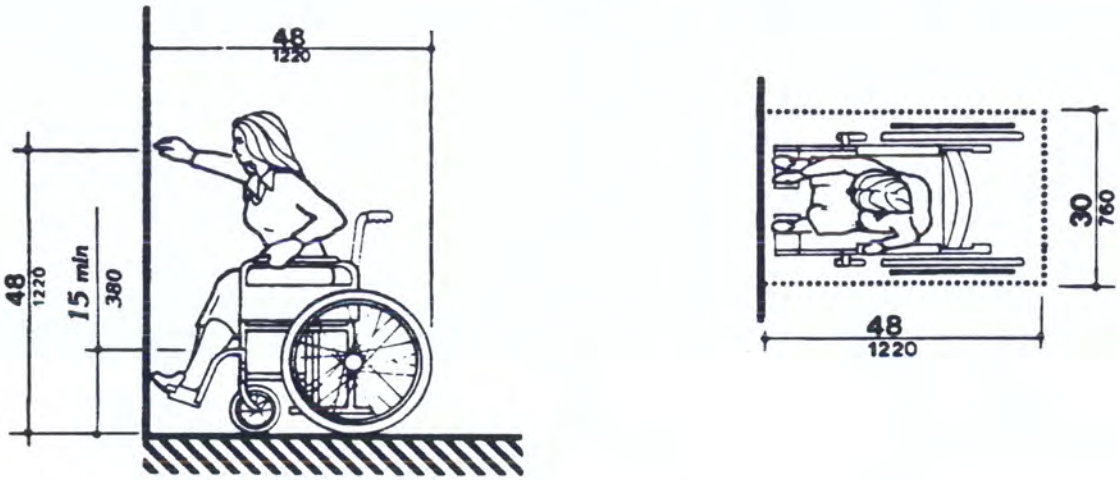

(a)
High Forward Reach Limit

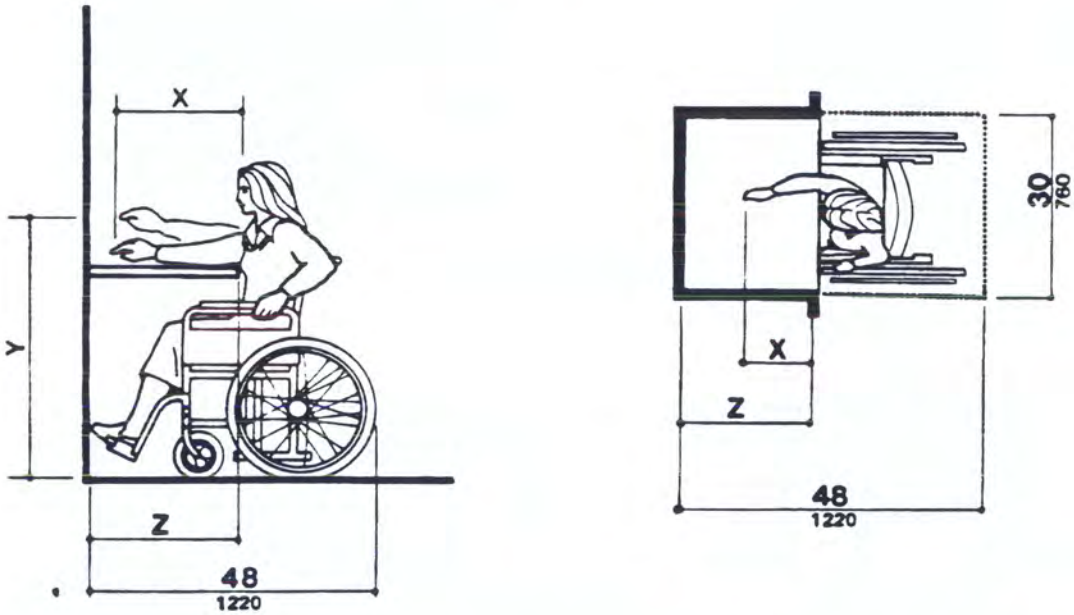

NOTE: x shall be ≤ 25 in (635 mm); z shall be ≥ x. When x < 20 in (510 mm), then y shall be 48 in (1220 mm) maximum. When x is 20 to 25 in (510 to 635 mm), then y shall be 44 in (1120 mm) maximum.

(b)
Maximum Forward Reach over an Obstruction

Fig. 5
Forward Reach

4.3 Accessible Route

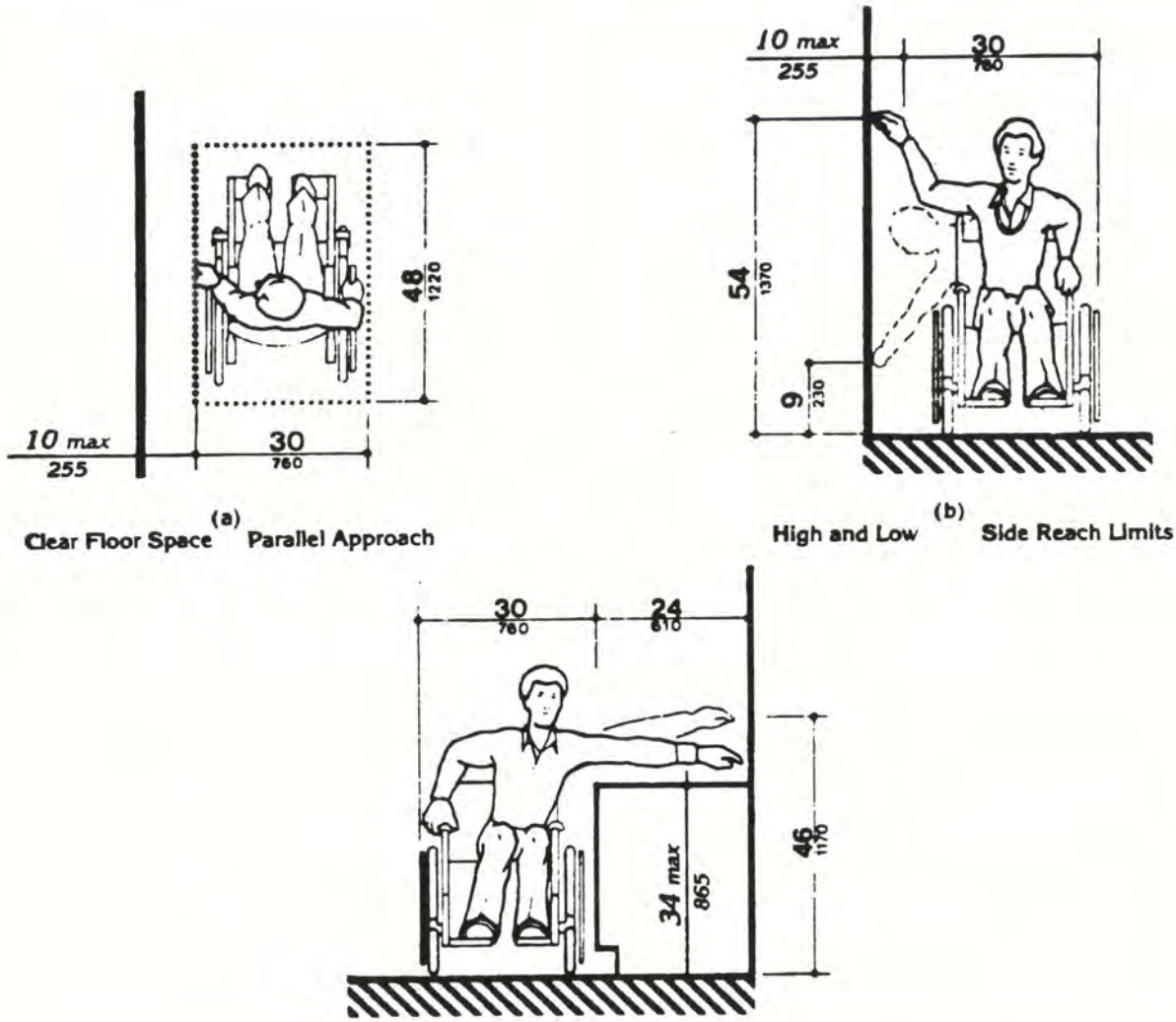

Fig. 6
Side Reach

4.3.3 Width. The minimum clear width of an accessible route shall be 36 in (915 mm) except at doors (see 4.13.5). If a person in a wheelchair must make a turn around an obstruction, the minimum clear width of the accessible route shall be as shown in Fig. 7.

4.3.4 Passing Space. If an accessible route has less than 60 in (1525 mm) clear width, then passing spaces at least 60 in by 60 in (1525 mm by 1525 mm) shall be located at reasonable intervals not to exceed 200 ft (61 m). A T-intersection of two corridors or walks is an acceptable passing place.

4.3.5 Head Room. Accessible routes shall comply with 4.4.2.

4.3.6 Surface Textures. The surface of an accessible route shall comply with 4.5.

4.3.7 Slope. An accessible route with a running slope greater than 1:20 is a ramp and shall comply with 4.8. Nowhere shall the cross slope of an accessible route exceed 1:50.

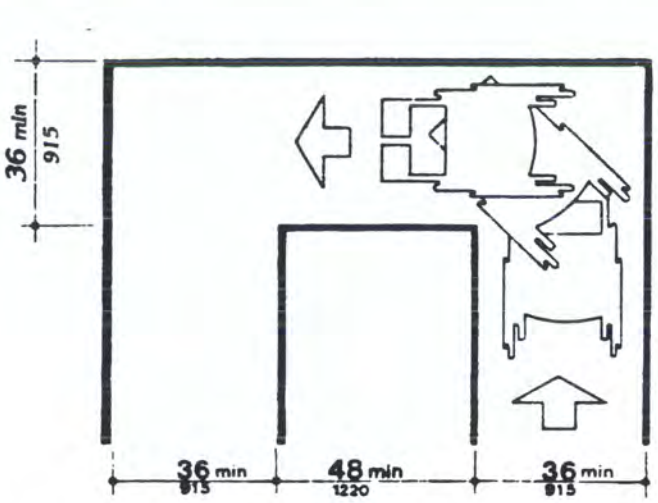

(a)
90° Turn

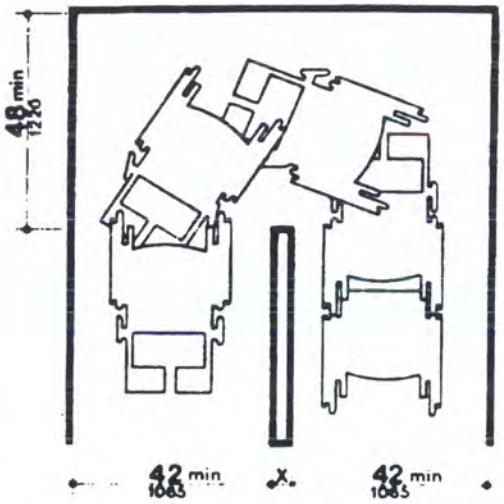

NOTE: Dimensions shown apply when x < 48 in (1220 mm).

(b)
Turns around an Obstruction

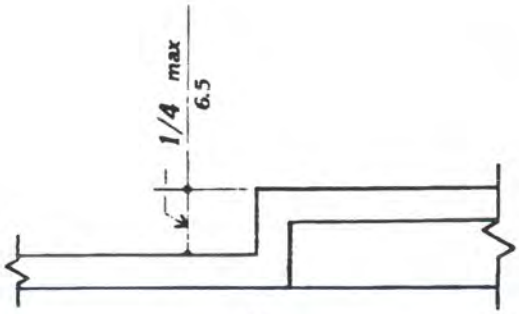

(c)
Changes in level

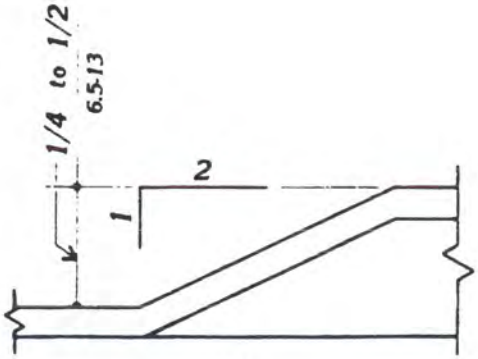

(d)
Changes in level

Fig. 7
Width of Accessible Route

4.3.8 Changes in Levels. Changes in levels along an accessible route shall comply with 4.5.2. If an accessible route has changes in level greater than 1/2 in (13 mm), then a curb ramp, ramp, elevator, or platform lift shall be provided that complies with 4.7, 4.8, 4.10, or 4.11, respectively. Stairs shall not be part of an accessible route.

4.3.9 Doors. Doors along an accessible route shall comply with 4.13.

4.3.10* Egress. Accessible routes serving any accessible space or element shall also serve as a means of egress for emergencies or connect to an accessible place of refuge. Such accessible routes and places of refuge shall comply with the requirements of the administrative authority having jurisdiction. *Where fire code provisions require more than one means of egress from any space or room, then more than one accessible means of egress shall also be provided for handicapped people. Arrange egress so as to be readily accessible from all accessible rooms and spaces.*

4.4 Protruding Objects

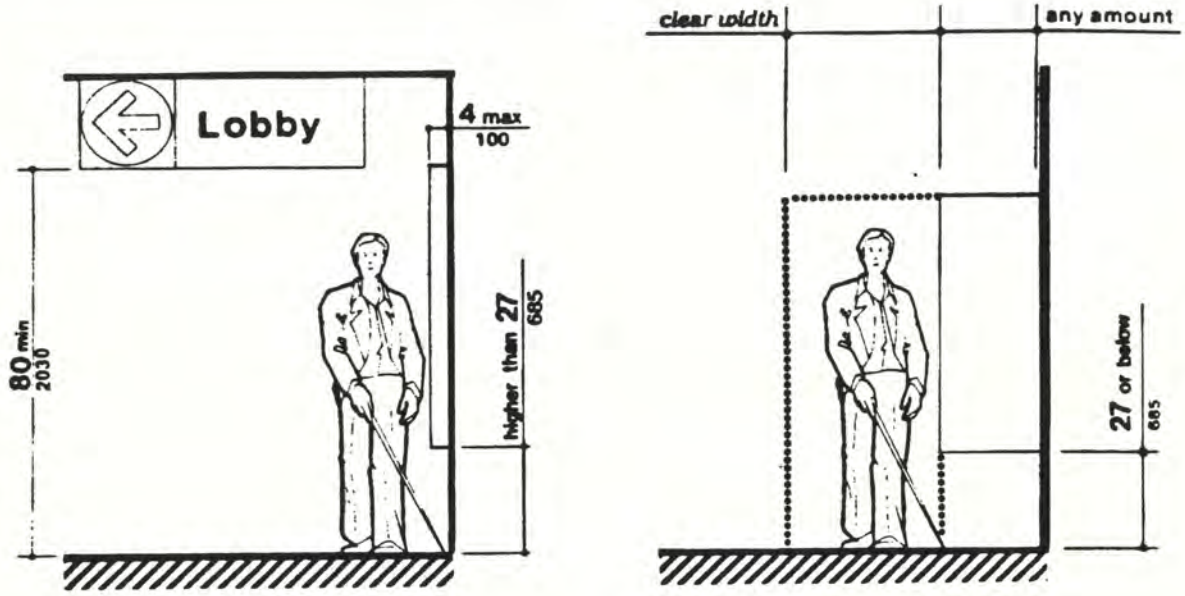

(a)
Walking Parallel to a Wall

(b)
Walking Perpendicular to a Wall

Fig. 8
Protruding Objects

4.4 Protruding Objects.

4.4.1* General. Objects projecting from walls (for example, telephones) with their leading edges between 27 in and 80 in (685 mm and 2030 mm) above the finished floor shall protrude no more than 4 in (100 mm) into walks, halls, corridors, passageways, or aisles (see Fig. 8(a)). Objects mounted with their leading edges at or below 27 in (685 mm) above the finished floor may protrude any amount (see Fig. 8(a) and (b)). Free-standing objects mounted on posts or pylons may overhang 12 in (305 mm) maximum from 27 in to 80 in (685 mm to 2030 mm) above the ground or finished floor (see Fig. 8(c) and (d)). Protruding objects shall not reduce the clear width of an accessible route or maneuvering space (see Fig. 8(e)).

4.4.2 Head Room. Walks, halls, corridors, passageways, aisles, or other circulation spaces shall have 80 in (2030 mm) minimum clear head room (see Fig. 8(a)). *If vertical clearance of an area adjoining an accessible route is reduced to less than 80 in (nominal dimension), a barrier to warn blind or visually-impaired persons shall be provided (see Fig. 8(c)).*

4.4 Protruding Objects

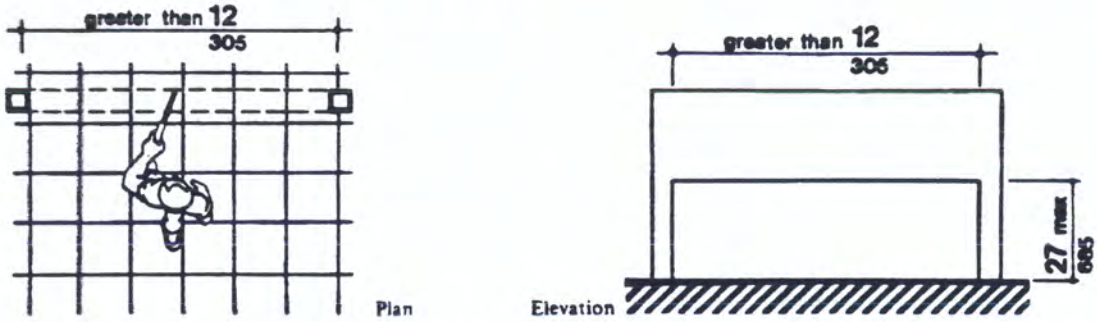

(c) Free-Standing Overhanging Objects

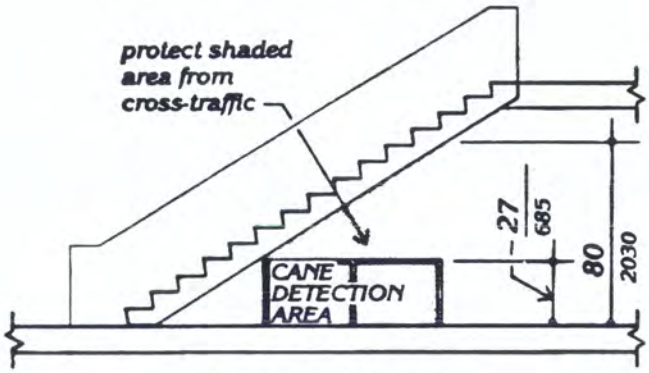

(c) Overhead Hazards

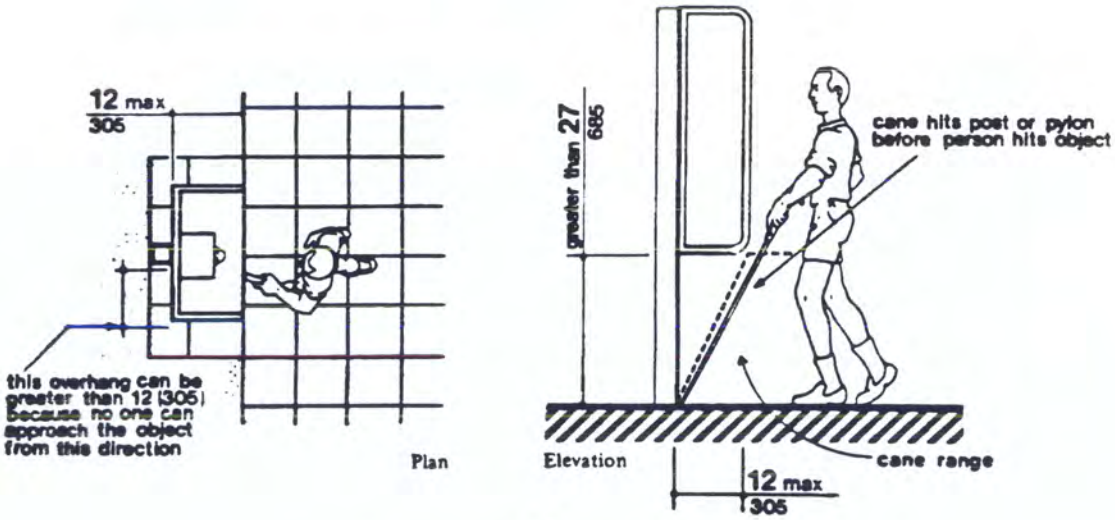

(d)
Objects Mounted on Posts or Pylons

Fig. 8
Protruding Objects *(Continued)*

4.4 Protruding Objects

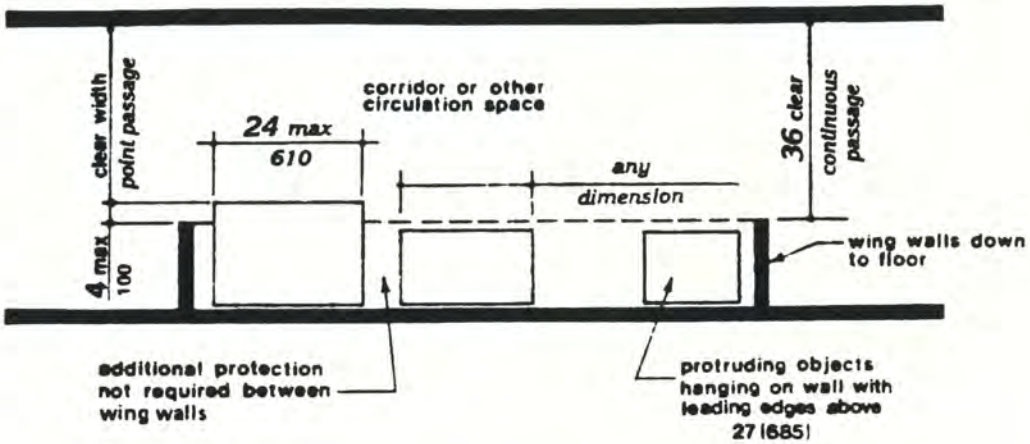

(e)
Example of Protection around Wall-Mounted Objects and Measurements of Clear Widths

Fig. 8
Protruding Objects *(Continued)*

4.5 Ground and Floor Surfaces.

4.5.1* General. Ground and floor surfaces along accessible routes and in accessible rooms and spaces, including floors, walks, ramps, stairs, and curb ramps, shall be stable, firm, *slip-resistant*, and shall comply with 4.5.

4.5.2 Changes in Level. Changes in level up to 1/4 in (6 mm) may be vertical and without edge treatment *(see Fig. 7(c))*. Changes in level between 1/4 in and 1/2 in (6 mm and 13 mm) shall be beveled with a slope no greater than 1:2 *(see Fig. 7(d))*. Changes in level greater than 1/2 in (13 mm) shall be accomplished by means of a ramp that complies with 4.7 or 4.8.

4.5.3* Carpet. If carpet or carpet tile is used on a ground or floor surface, then it shall be securely attached; have a firm cushion, pad, or backing or no cushion or pad; and have a level loop, textured loop, level cut pile, or level cut/uncut pile texture. The maximum pile height shall be 1/2 in (13 mm). Exposed edges of carpet shall be fastened to floor surfaces and have trim along the entire length of the exposed edge. Carpet edge trim shall comply with 4.5.2. *If carpet tile is used on an accessible ground or floor surface, it shall have a maximum combined thickness of pile, cushion, and backing height of 1/2 in (13 mm) (see Fig. 8(f)).*

4.5.4 Gratings. If gratings are located in walking surfaces, then they shall have spaces no greater than 1/2 in (13 mm) wide in one direction *(see Fig. 8(g))*. If gratings have elongated openings, then they shall be placed so that the long dimension is perpendicular to the dominant direction of travel *(see Fig. 8(h))*.

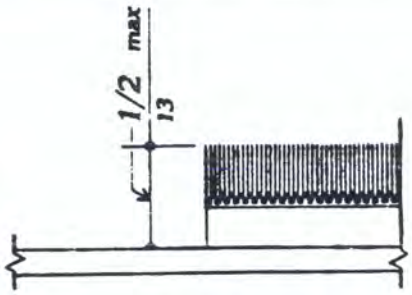

Fig. 8(f)
Carpet Tile Thickness

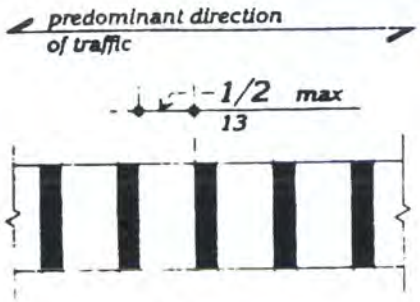

Fig. 8(g)
Gratings

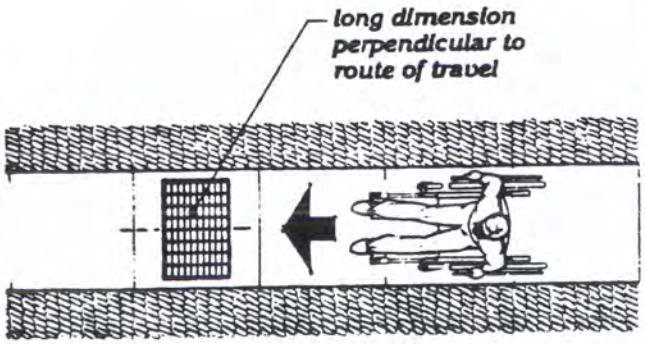

Fig. 8(h)
Grating Orientation

4.6 Parking and Passenger Loading Zones.

4.6.1 Minimum Number. *Parking spaces required to be accessible by 4.1 shall comply with 4.6.2 through 4.6.4. Passenger loading zones required to be accessible by 4.1 shall comply with 4.6.5 and 4.6.6.*

4.6.2 Location. Parking spaces for disabled people and accessible passenger loading zones that serve a particular building shall be *the spaces or zones located closest to the nearest accessible entrance on an accessible route.* In separate parking structures or lots that do not serve a particular building, parking spaces for disabled people shall be located on the shortest possible circulation route to an accessible pedestrian entrance of the parking facility.

4.6.3* Parking Spaces. Parking spaces for disabled people shall be at least 96 in (2440 mm) wide and shall have an adjacent access aisle 60 in (1525 mm) wide minimum (see Fig. 9). Parking access aisles shall be part of an accessible route to the building or facility entrance and shall comply with 4.3. Two accessible parking spaces may share a common access aisle. Parked vehicle overhangs shall not reduce the clear width of an accessible circulation route. *Parking spaces and access aisles shall be level with surface slopes not exceeding 1:50 in all directions.*

EXCEPTION: If accessible parking spaces for vans designed for handicapped persons are provided, each should have an adjacent access aisle at least 96 in (2440 mm) wide complying with 4.5, Ground and Floor Surfaces.

4.6.4* Signage. Accessible parking spaces shall be designated as reserved for the disabled by a sign showing the symbol of accessibility (see 4.30.5). Such signs shall not be obscured by a vehicle parked in the space.

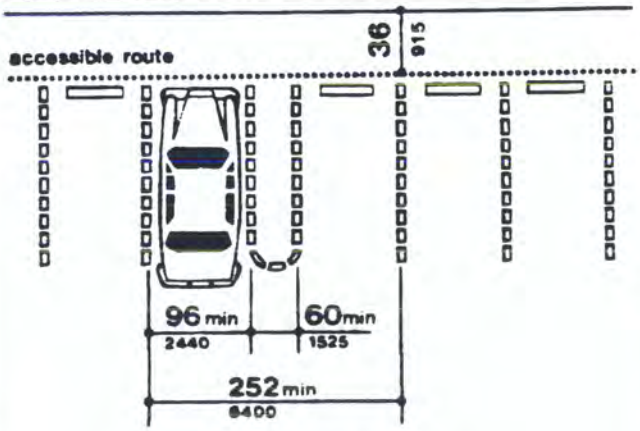

Fig. 9
Dimensions of Parking Spaces

4.6 Parking and Passenger Loading Zones

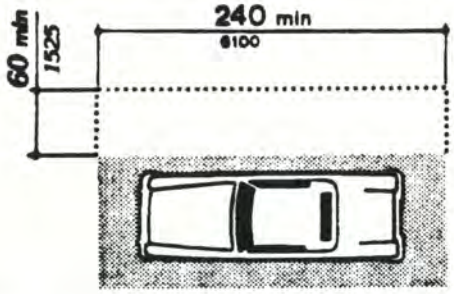

Fig. 10
Access Aisle at Passenger Loading Zones

4.6.5 Passenger Loading Zones. Passenger loading zones shall provide an access aisle at least *60* in (*1525* mm) wide and 20 ft (6 m) long adjacent and parallel to the vehicle pull-up space (see Fig. 10). If there are curbs between the access aisle and the vehicle pull-up space, then a curb ramp complying with 4.7 shall be provided. *Vehicle standing spaces and access aisles shall be level with surface slopes not exceeding 1:50 in all directions.*

4.6.6 *Vertical Clearance.* *Provide minimum vertical clearances of 114 in at accessible passenger loading zones and along vehicle access routes to such areas from site entrances. If accessible van parking spaces are provided, then the minimum vertical clearance should be 114 in.*

4.7 Curb Ramps.

4.7.1 Location. Curb ramps complying with 4.7 shall be provided wherever an accessible route crosses a curb.

4.7.2 Slope. Slopes of curb ramps shall comply with 4.8.2. The slope shall be measured as shown in Fig. 11. *Transitions from ramps to walks, gutters, or streets shall be flush and free of abrupt changes. Maximum slopes of adjoining gutters, road surface immediately adjacent to the curb ramp, or accessible route shall not exceed 1:20.*

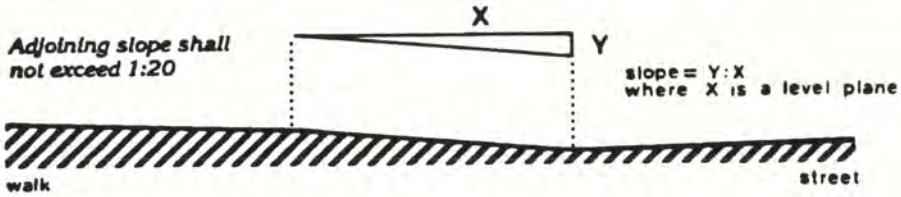

Fig. 11
Measurement of Curb Ramp Slopes

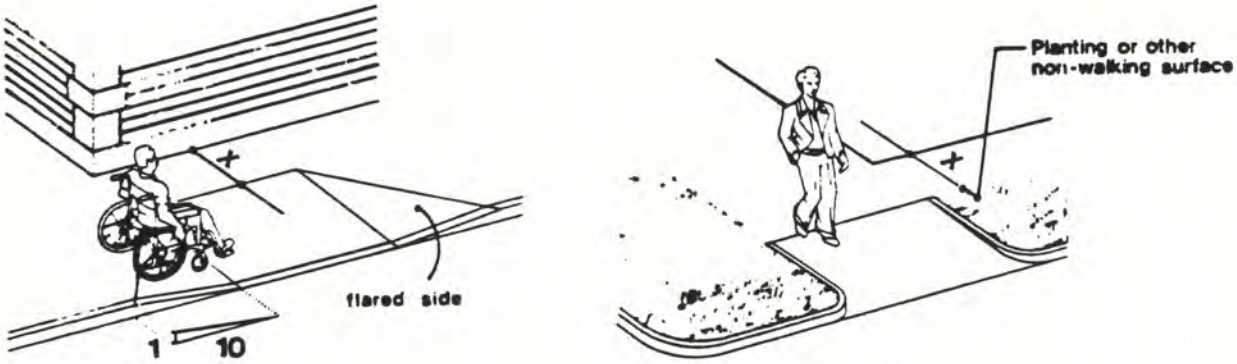

(a)
Flared Sides

(b)
Returned Curb

If X is less than 48 in, then the slope of the flared side shall not exceed 1:12.

Fig. 12
Sides of Curb Ramps

4.7.3 Width. The minimum width of a curb ramp shall be 36 in (915 mm), exclusive of flared sides.

4.7.4 Surface. Surfaces of curb ramps shall comply with 4.5.

4.7.5 Sides of Curb Ramps. If a curb ramp is located where pedestrians must walk across the ramp, *or where it is not protected by handrails or guardrails*, then it shall have flared sides; the maximum slope of the flare shall be 1:10 (see Fig. 12(a)). Curb ramps with returned curbs may be used where pedestrians would not normally walk across the ramp (see Fig. 12(b)).

4.7.6 Built-up Curb Ramps. Built-up curb ramps shall be located so that they do not project into vehicular traffic lanes (see Fig. 13).

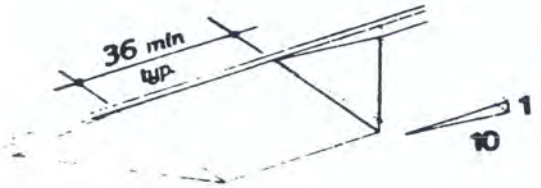

Fig. 13
Built-Up Curb Ramp

4.7.7 Warning Textures. *(Removed and reserved).*

4.7.8 Obstructions. Curb ramps shall be located or protected to prevent their obstruction by parked vehicles.

4.7.9 Location at Marked Crossings. Curb ramps at marked crossings shall be wholly contained within the markings, excluding any flared sides (see Fig. 15).

4.7.10 Diagonal Curb Ramps. If diagonal (or corner type) curb ramps have returned curbs or other well-defined edges, such edges shall be parallel to the direction of pedestrian flow. The bottom of diagonal curb ramps shall have 48 in (1220 mm) minimum clear space as shown in Fig. 15(c) and (d). If diagonal curb ramps are provided at marked crossings, the 48 in (1220 mm) clear space shall be within the markings (see Fig. 15(c) and (d)). If diagonal curb ramps have flared sides, they shall also have at least a 24 in (610 mm) long segment of straight curb located on each side of the curb ramp and within the marked crossing (see Fig. 15(c)).

4.7.11 Islands. Any raised islands in crossings shall be cut through level with the street or have curb ramps at both sides and a level area at least 48 in (1220 mm) long in the part of the island intersected by the crossings (see Fig. 15(a) and (b)).

4.7.12 Uncurbed Intersections. *(Removed and reserved).*

4.8 Ramps.

4.8.1* General. Any part of an accessible route with a slope greater than 1:20 shall be considered a ramp and shall comply with 4.8.

4.8.2* Slope and Rise. The least possible slope shall be used for any ramp. The maximum slope of a ramp in new construction shall be 1:12. The maximum rise for any run shall be 30 in (760 mm) (see Fig. 16). Curb ramps and ramps to be constructed on existing sites or in existing buildings or facilities may have slopes and rises as shown in Table 2 if space limitations prohibit the use of a 1:12 slope or less *(see 4.1.6)*.

4.8.3 Clear Width. The minimum clear width of a ramp shall be 36 in (915 mm).

4.8.4 Landings. Ramps shall have level landings at the bottom and top of each run. Landings shall have the following features:

(1) The landing shall be at least as wide as the ramp run leading to it.

(2) The landing length shall be a minimum of 60 in (1525 mm) clear.

(3) If ramps change direction at landings, the minimum landing size shall be 60 in by 60 in (1525 mm by 1525 mm).

(4) If a doorway is located at a landing, then the area in front of the doorway shall comply with 4.13.6.

4.8.5* Handrails. If a ramp run has a rise greater than 6 in (250 mm) or a horizontal projection greater than 72 in (1830 mm), then it shall have handrails on both sides. Handrails are not required on curb ramps. Handrails shall comply with 4.26 and shall have the following features:

(1) Handrails shall be provided along both sides of ramp segments. The inside handrail on switchback or dogleg ramps shall always be continuous.

(2) If handrails are not continuous, they shall extend at least 12 in (305 mm) beyond the top and bottom of the ramp segment and shall be parallel with the floor or ground surface.

(3) The clear space between the handrail and the wall shall be 1-1/2 in (38 mm).

(4) Gripping surfaces shall be continuous.

(5) *Top of handrail gripping surfaces shall be mounted between 30 in and 34 in (760 mm and 865 mm) above ramp surfaces.*

(6) *Ends of handrails shall be either rounded or returned smoothly to floor, wall, or post.*

(7) *Handrails shall not rotate within their fittings.*

4.8 Ramps

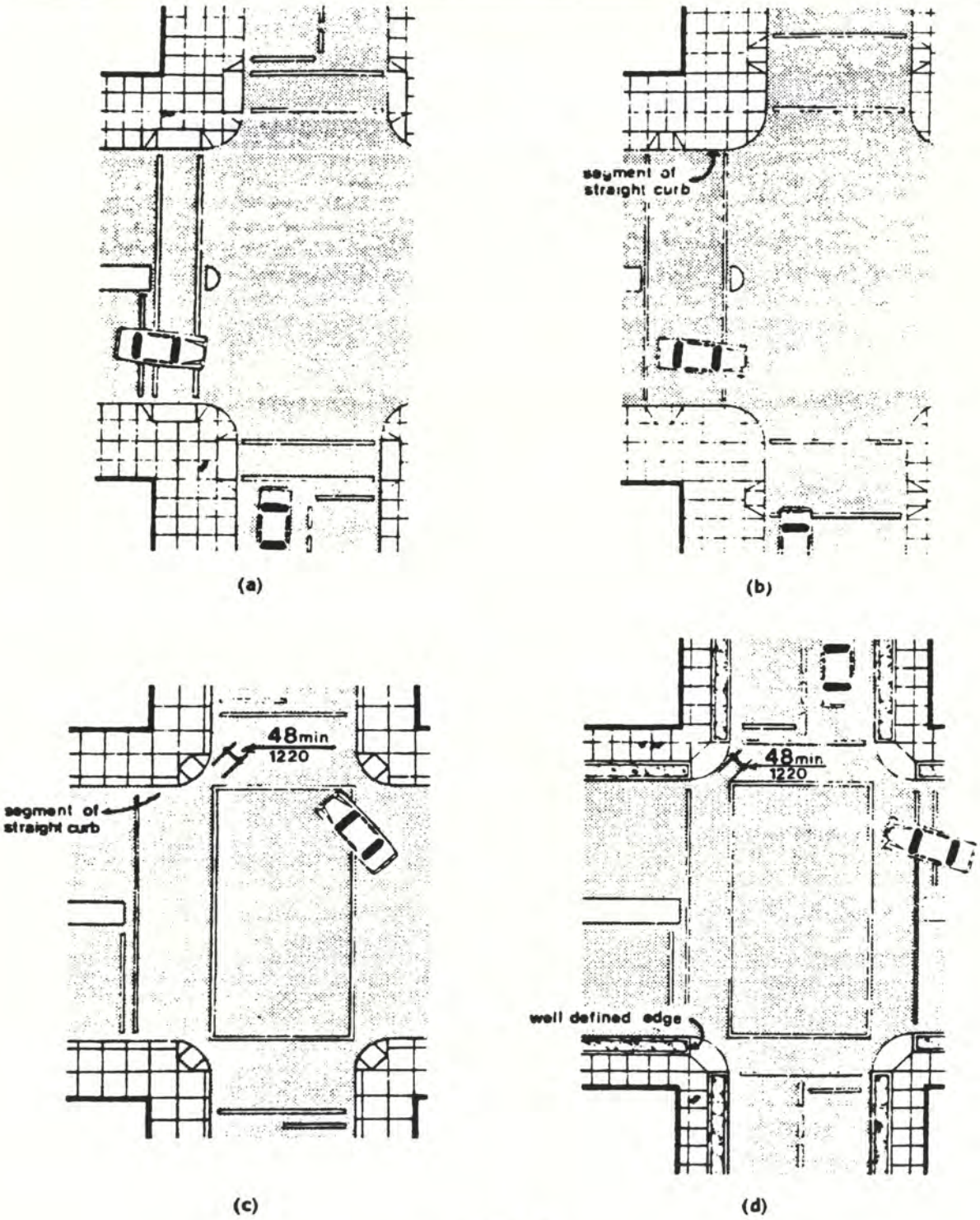

Fig. 15
Curb Ramps at Marked Crossings

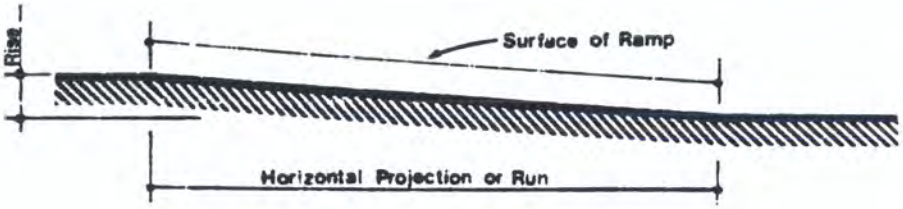

	Maximum Rise		Maximum Horizontal Projection	
Slope	in	mm	ft	m
1:12 to < 1:16	30	760	30	9
1:16 to < 1:20	30	760	40	12

Fig. 16
Components of a Single Ramp Run and Sample Ramp Dimensions

4.8.6 Cross Slope and Surfaces. The cross slope of ramp surfaces shall be no greater than 1:50. Ramp surfaces shall comply with 4.5.

4.8.7 Edge Protection. Ramps and landings with drop-offs shall have curbs, walls, railings, or projecting surfaces that prevent people from slipping off the ramp. Curbs shall be a minimum of 2 in (50 mm) high (see Fig. 17).

4.8.8 Outdoor Conditions. Outdoor ramps and their approaches shall be designed so that water will not accumulate on walking surfaces.

4.9 Stairs.

4.9.1 Minimum Number. Stairs *required to be accessible by 4.1 shall comply with 4.9.*

4.9.2 Treads and Risers. On any given flight of stairs, all steps shall have uniform riser heights and uniform tread widths. Stair treads shall be no less than 11 in (280 mm) wide, measured from riser to riser (see Fig. 18(a)). *Open risers are not permitted on accessible routes.*

4.9.3 Nosings. The undersides of nosings shall not be abrupt. The radius of curvature at the leading edge of the tread shall be no greater than 1/2 in (13 mm). Risers shall be sloped or the underside of the nosing shall have an angle not less than 60 degrees from the horizontal. Nosings shall project no more than 1-1/2 in (38 mm) (see Fig. 18).

4.9.4 Handrails. Stairways shall have handrails at both sides of all stairs. Handrails shall comply with 4.26 and shall have the following features:

(1) Handrails shall be continuous along both sides of stairs. The inside handrail on switchback or dogleg stairs shall always be continuous (see Fig. 19(a) and (b)).

(2) If handrails are not continuous, they shall extend at least 12 in (305 mm) beyond the top riser and at least 12 in (305 mm) plus the width of one tread beyond the bottom riser. At the top, the extension shall be parallel with the floor or ground surface. At the bottom, the handrail shall continue to slope for a distance of the width of one tread from the bottom riser; the remainder of the extension shall be horizontal (see Fig. 19(c) and (d)). Handrail extensions shall comply with 4.4.

(3) The clear space between handrails and wall shall be 1-1/2 in (38 mm).

(4) Gripping surfaces shall be uninterrupted by newel posts, other construction elements, or obstructions.

(5) *Top of handrail gripping surface shall be mounted between 30 in and 34 in (760 mm and 865 mm) above stair nosings.*

(6) *Ends of handrails shall be either rounded or returned smoothly to floor, wall, or post.*

(7) *Handrails shall not rotate within their fittings.*

4.9.5 Tactile Warnings at Stairs. *(Removed and reserved).*

4.9.6 Outdoor Conditions. Outdoor stairs and their approaches shall be designed so that water will not accumulate on walking surfaces.

4.9 Stairs

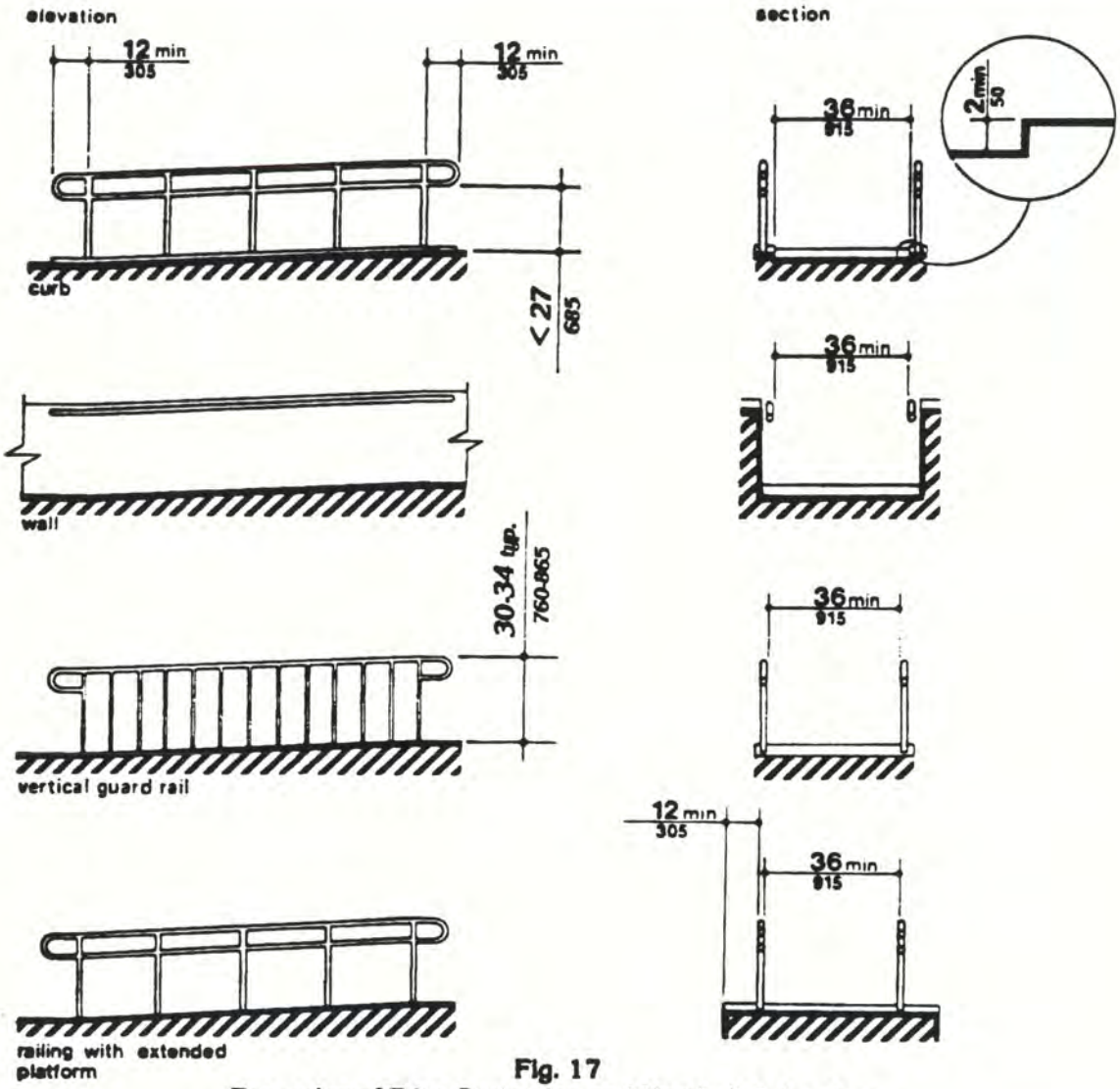

Fig. 17
Examples of Edge Protection and Handrail Extensions

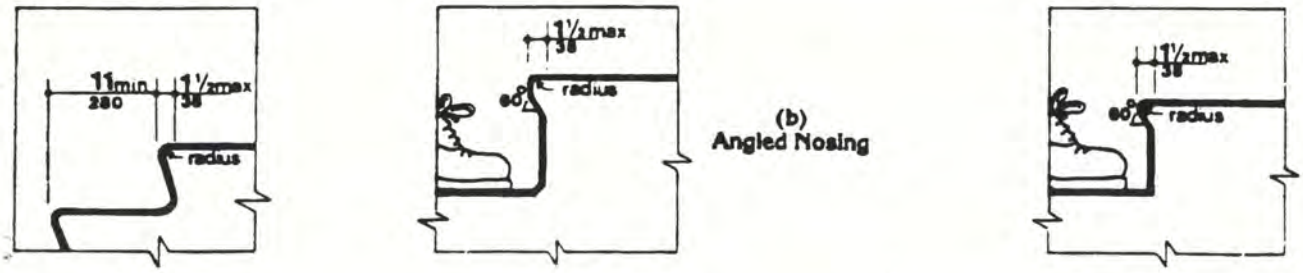

(a)
Flush Riser

(b)
Angled Nosing

(c)
Rounded Nosing

Fig. 18
Usable Tread Width and Examples of Acceptable Nosings

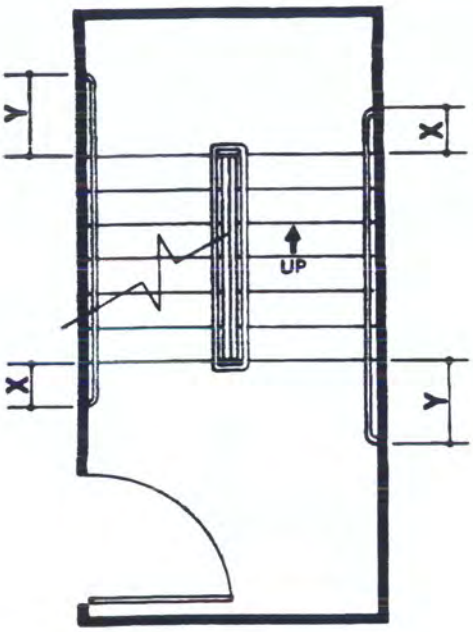

(a)
Plan

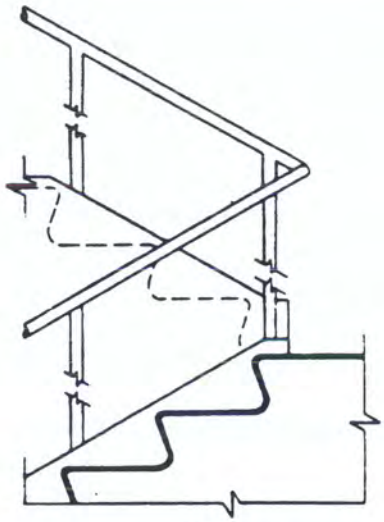

(b)
Elevation of Center Handrail

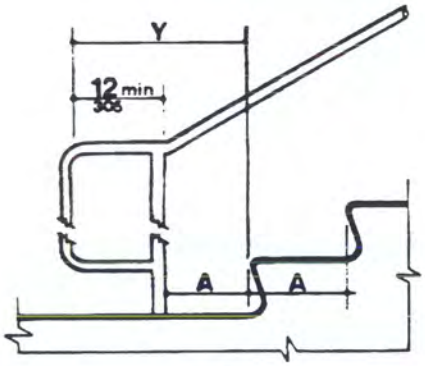

(c)
Extension at Bottom of Run

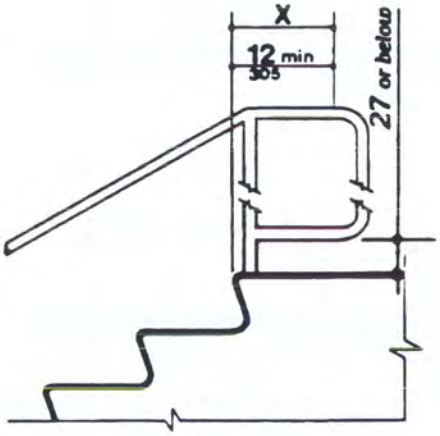

(d)
Extension at Top of Run

NOTE:

***X** is the 12 in minimum handrail extension required at each top riser.*

***Y** is the minimum handrail extension of 12 in plus the width of one tread that is required at each bottom riser.*

Fig. 19
Stair Handrails

4.10 Elevators.

4.10.1 General. *Accessible* elevators shall be on an accessible route and shall comply with 4.10 and with the American National Standard Safety Code for Elevators, Dumbwaiters, Escalators, and Moving Walks, ANSI A17.1-1978 and A17.1a-1979. This standard does not preclude the use of residential or fully enclosed wheelchair lifts when appropriate and approved by administrative authorities. *Freight elevators shall not be considered as meeting the requirements of this section, unless the only elevators provided are used as combination passenger and freight elevators for the public and employees.*

4.10.2 Automatic Operation. Elevator operation shall be automatic. Each car shall be equipped with a self-leveling feature that will automatically bring the car to floor landings within a tolerance of 1/2 in (13 mm) under rated loading to zero loading conditions. This self-leveling feature shall be automatic and independent of the operating device and shall correct the overtravel or undertravel.

4.10.3 Hall Call Buttons. Call buttons in elevator lobbies and halls shall be centered at 42 in (1065 mm) above the floor. Such call buttons shall have visual signals to indicate when each call is registered and when each call is answered. Call buttons shall be a minimum of 3/4 in (19 mm) in the smallest dimension. The button designating the up direction shall be on top (see Fig. 20). *Buttons shall be raised or flush. Objects mounted beneath hall call buttons shall not project into the elevator lobby more than 4 in (100 mm).*

4.10.4 Hall Lanterns. A visible and audible signal shall be provided at each hoistway entrance to indicate which car is answering a call. Audible signals shall sound once for the up direction and twice for the down direction or shall have verbal annunciators that say "up" or "down." Visible signals shall have the following features:

(1) Hall lantern fixtures shall be mounted so that their centerline is at least 72 in (1830 mm) above the lobby floor.

(2) Visual elements shall be at least 2-1/2 in (64 mm) in the smallest dimension.

(3) Signals shall be visible from the vicinity of the hall call button. In-car lanterns located in cars, visible from the vicinity of hall call buttons, and conforming to the above requirements, shall be acceptable (see Fig. 20).

4.10.5 *Raised* Characters on Hoistway Entrances. All elevator hoistway entrances shall have *raised* floor designations provided on both jambs. The centerline of the characters shall be 60 in (1525 mm) from the floor. Such characters shall be 2 in (50 mm) high and shall comply with 4.30. Permanently applied plates are acceptable if they are permanently fixed to the jambs. (See Fig. 20).

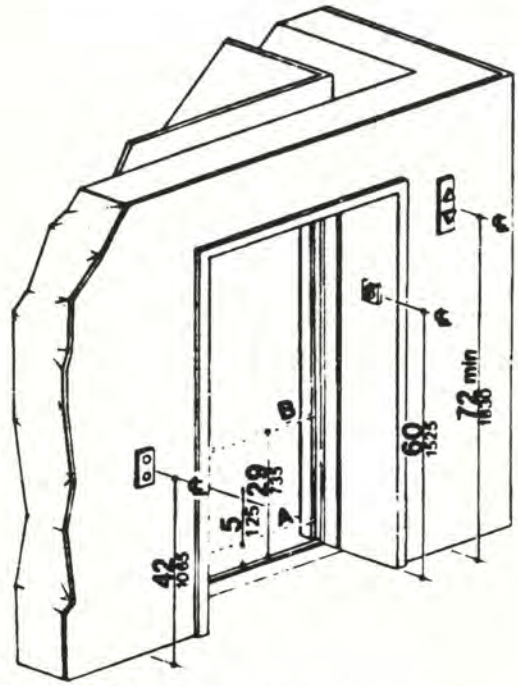

NOTE: The automatic door reopening device is activated if an object passes through either line A or line B. Line A and line B represent the vertical locations of the door reopening device not requiring contact.

Fig. 20
Hoistway and Elevator Entrances

4.10.6* Door Protective and Reopening Device. Elevator doors shall open and close automatically. They shall be provided with a reopening device that will stop and reopen a car door and hoistway door automatically if the door becomes obstructed by an object or person. The device shall be capable of completing these operations without requiring contact for an obstruction passing through the opening at heights of 5 in and 29 in (125 mm and 735 mm) from the floor (see Fig. 20). Door reopening devices shall remain effective for at least 20 seconds. After such an interval, doors may close in accordance with the requirements of ANSI A17.1-1978 and A17.1a-1979.

4.10.7* Door and Signal Timing for Hall Calls. The minimum acceptable time from notification that a car is answering a call until the doors of that car start to close shall be calculated from the following equation:

$$T = \frac{D}{1.5\ ft/s} \qquad \text{or } T = \frac{D}{445\ mm/s}$$

where T = total time in seconds and D = distance (in feet or millimeters) from a point in the lobby or corridor 60 in (1525 mm) directly in front of the farthest

call button controlling that car to the centerline of its hoistway door (see Fig. 21). For cars with in car lanterns, T begins when the lantern is visible from the vicinity of hall call buttons and an audible signal is sounded. *The minimum acceptable notification time shall be 5 seconds.*

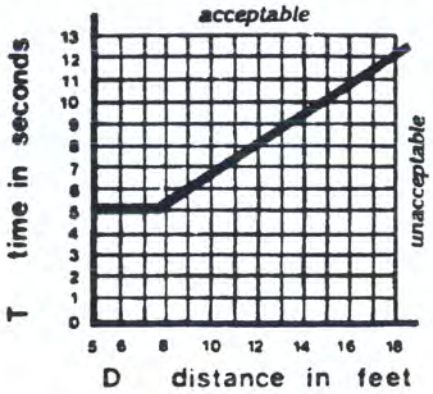

Fig. 21
Graph of Timing Equation

4.10.8 Door Delay for Car Calls. The minimum time for elevator doors to remain fully open in response to a car call shall be 3 seconds.

4.10.9 Floor Plan of Elevator Cars. The floor area of elevator cars shall provide space for wheelchair users to enter the car, maneuver within reach of controls, and exit from the car. Acceptable door opening and inside dimensions shall be as shown in Fig. 22. The clearance between the car platform sill and the edge of any hoistway landing shall be no greater than 1-1/4 in (32 mm).

4.10.10 Floor Surfaces. Floor surfaces shall comply with 4.5.

4.10.11 Illumination Levels. The level of illumination at the car controls, platform, and car threshold and landing sill shall be at least 5 footcandles (53.8 lux).

4.10.12* Car Controls. Elevator control panels shall have the following features:

(1) Buttons. All control buttons shall be at least 3/4 in (19 mm) in their smallest dimension. They may be *raised* or flush.

(2) Tactile and Visual Control Indicators. All control buttons shall be designated by *raised* standard alphabet characters for letters, arabic characters for numerals, or standard symbols as shown in Fig. 23(a), and as required in ANSI A17.1-1978 and A17.1a-1979. Raised characters and symbols shall comply with 4.30. The call button for the main entry floor shall be

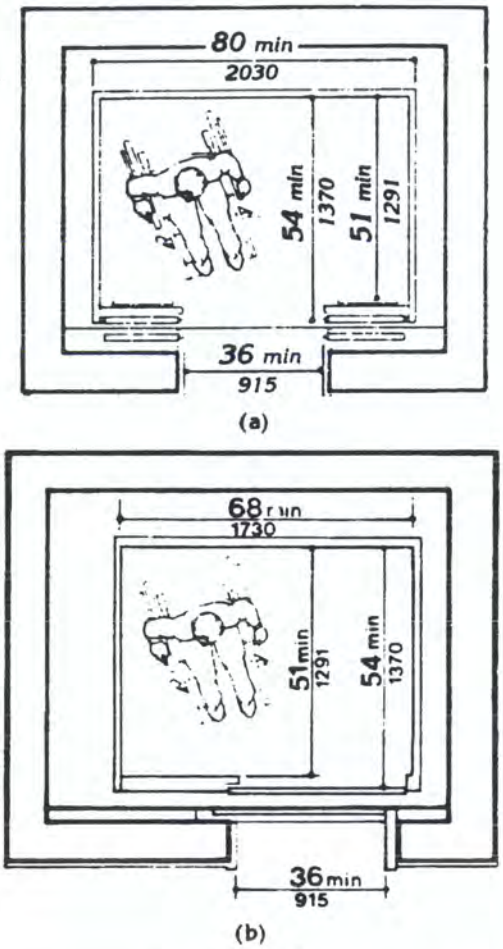

Fig. 22
Minimum Dimensions of Elevator Cars

designated by a *raised* star at the left of the floor designation (see Fig. 23(a)). All *raised* designations for control buttons shall be placed immediately to the left of the button to which they apply. Applied plates, permanently attached, are an acceptable means to provide *raised* control designations. Floor buttons shall be provided with visual indicators to show when each call is registered. The visual indicators shall be extinguished when each call is answered.

(3) Height. All floor buttons shall be no higher than *48 in (1220 mm), unless there is a substantial increase in cost, in which case the maximum mounting height may be increased to 54 in (1370 mm),* above the floor. Emergency controls, including the emergency alarm and emergency stop, shall be grouped at the bottom of the panel and shall have their centerlines no less than 35 in (890 mm) above the floor (see Fig. 23(a) and (b)).

4.10 Elevators

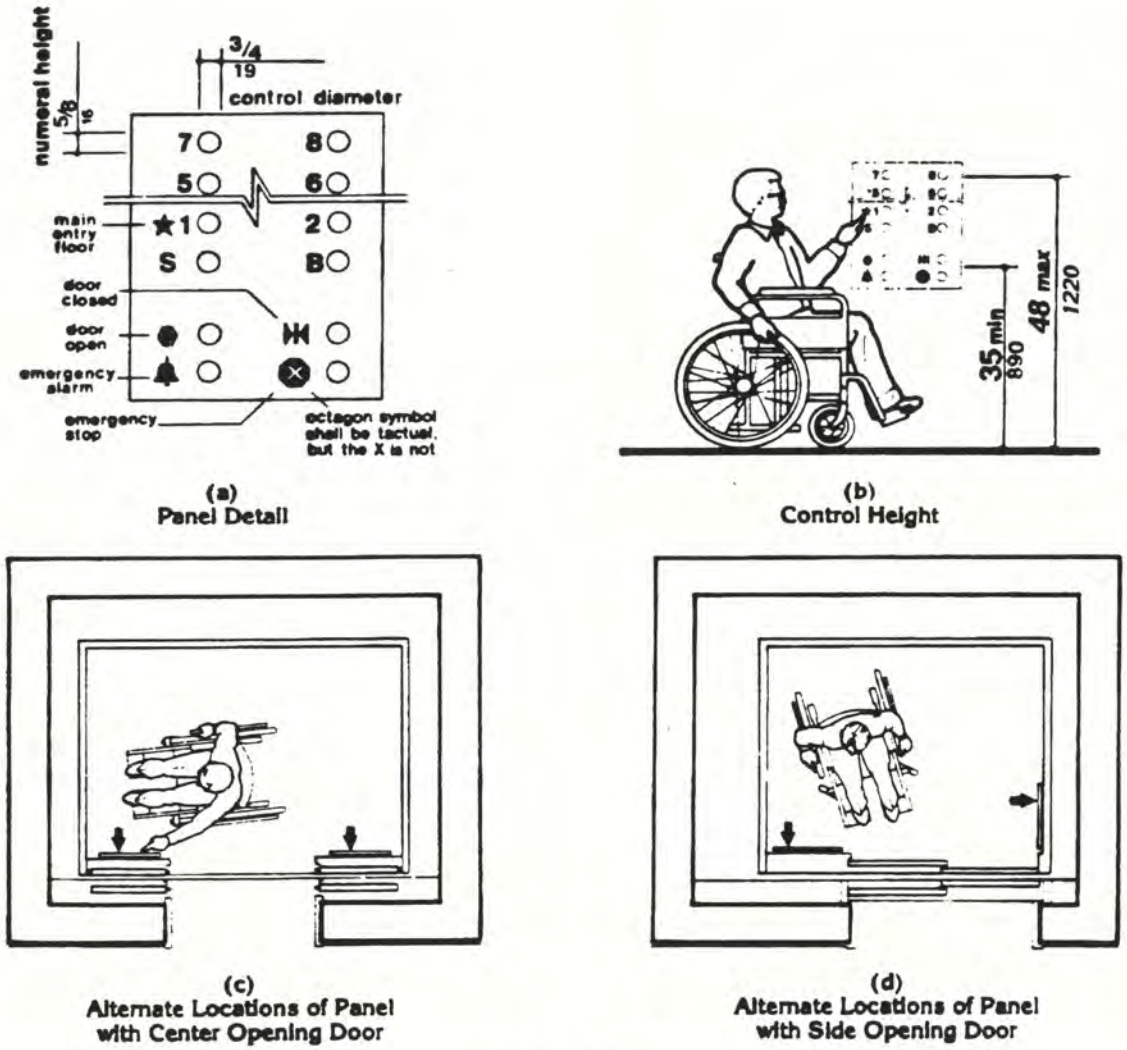

Fig. 23
Car Controls

(4) Location. Controls shall be located on a front wall if cars have center opening doors, and at the side wall or at the front wall next to the door if cars have side opening doors (see Fig. 23(c) and (d)).

4.10.13* Car Position Indicators. In elevator cars, a visual car position indicator shall be provided above the car control panel or over the door to show the position of the elevator in the hoistway. As the car passes or stops at a floor served by the elevators, the corresponding numerals shall illuminate, and an audible signal shall sound. Numerals shall be a minimum of 1/2 in (13 mm) high. The audible signal shall be no less than 20 decibels with a frequency no higher than 1500 Hz. An automatic verbal announcement of the floor number at which a car stops or which a car passes may be substituted for the audible signal.

4.10.14* Emergency Communications. If provided, emergency two-way communication systems between the elevator and a point outside the hoistway shall comply with ANSI A17.1-1978 and A17.1a-1979. The highest operable part of a two-way communication system shall be a maximum of 48 in (1220 mm) from the floor of the car. It shall be identified by a raised or recessed symbol and lettering complying with 4.30 and located adjacent to the device. If the system uses a handset, then the length of the cord from the panel to

the handset shall be at least 29 in (735 mm). *If the system is located in a closed compartment, the compartment door hardware shall conform to 4.27, Controls and Operating Mechanisms. The emergency intercommunication system shall not require voice communication.*

4.11* Platform Lifts.

4.11.1 Location. *Platform lifts permitted by 4.1 shall comply with the requirements of 4.11.*

4.11.2 Other Requirements. If platform lifts are used, they shall comply with 4.2.4, 4.5, 4.27, and the applicable safety regulations of administrative authorities having jurisdiction.

4.11.3 *Entrance.* *If platform lifts are used, then they should facilitate unassisted entry and exit from the lift in compliance with 4.11.2.*

4.12 Windows. *(Reserved).*

4.13 Doors.

4.13.1 General. *Doors required to be accessible by 4.1 shall comply with the requirements of 4.13.*

4.13.2 Revolving Doors and Turnstiles. Revolving doors or turnstiles shall not be the only means of passage at an accessible entrance or along an accessible route. *An accessible gate or door shall be provided adjacent to the turnstile or revolving door and shall be so designed as to facilitate the same use pattern.*

4.13.3 Gates. Gates, including ticket gates, shall meet all applicable specifications of 4.13.

4.13.4 Double-Leaf Doorways. If doorways have two *independently operated* door leaves, then at least one leaf shall meet the specifications in 4.13.5 and 4.13.6. That leaf shall be an active leaf.

4.13.5 Clear Width. Doorways shall have a minimum clear opening of 32 in (815 mm) with the door open 90 degrees, measured between the face of the door and the stop (see Fig. 24(a), (b), (c), and (d)). Openings more than 24 in (610 mm) in depth shall comply with 4.2.1 and 4.3.3 (see Fig. 24(e)).

EXCEPTION: Doors not requiring full user passage, such as shallow closets, may have the clear opening reduced to 20 in (510 mm) minimum.

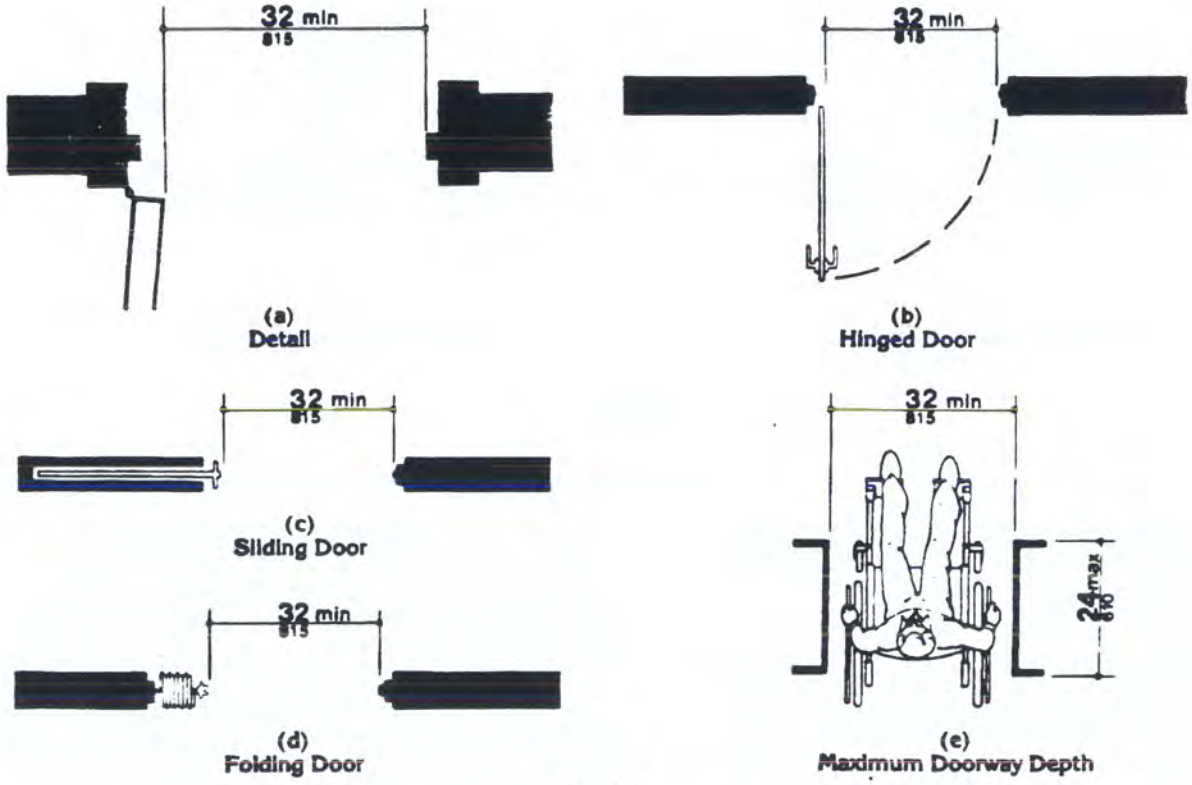

Fig. 24
Clear Doorway Width and Depth

4.13 Doors

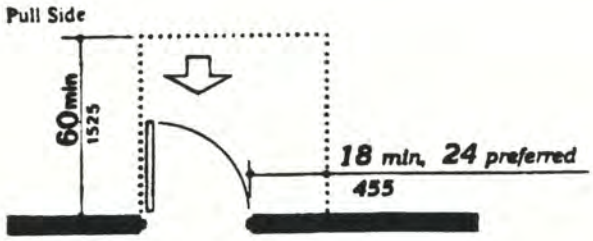

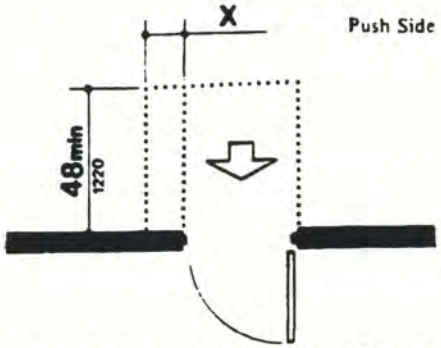

NOTE: x = 12 in (305 mm) if door has both a closer and latch.

(a)
Front Approaches — Swinging Doors

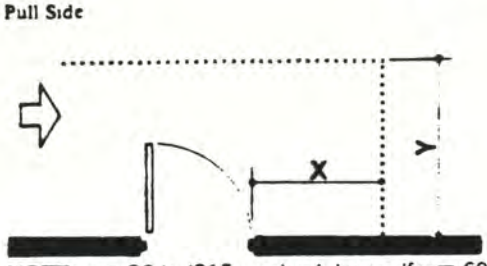

NOTE: x = 36 in (915 mm) minimum if y = 60 in (1525 mm); x = 42 in (1065 mm) minimum if y = 54 in (1370 mm).

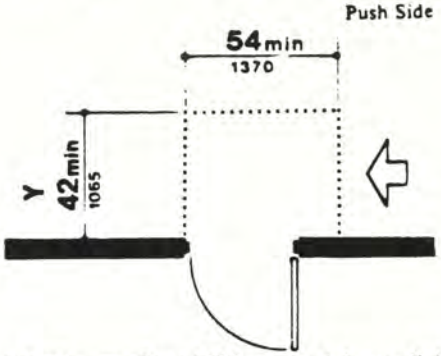

NOTE: y = 48 in (1220 mm) minimum if door has both a latch and closer.

(b)
Hinge Side Approaches — Swinging Doors

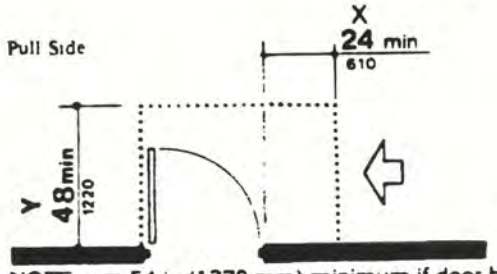

NOTE: y = 54 in (1370 mm) minimum if door has closer.

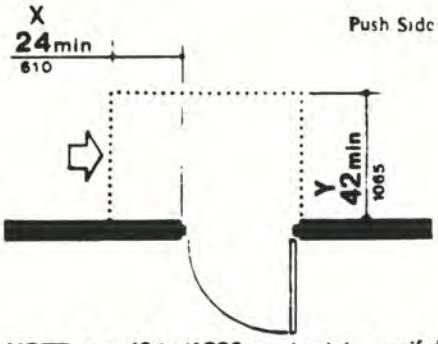

NOTE: y = 48 in (1220 mm) minimum if door has closer.

(c)
Latch Side Approaches — Swinging Doors

NOTE: All doors in alcoves shall comply with the clearances for front approaches.

Fig. 25
Maneuvering Clearances at Doors

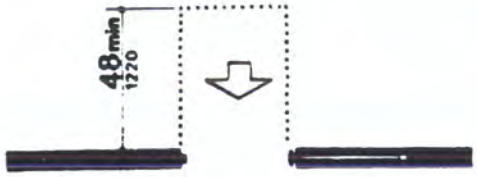

(d)
Front Approach — Sliding Doors *and Folding Doors*

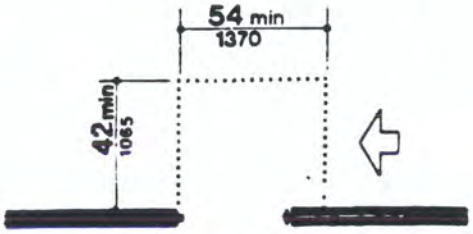

(e)
Slide Side Approach — Sliding Doors *and Folding Doors*

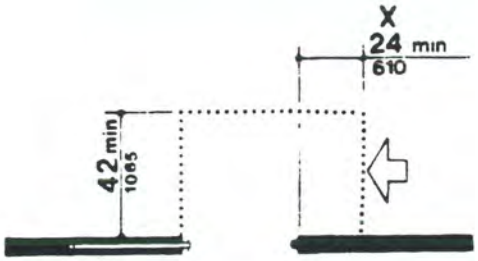

(f)
Latch Side Approach — Sliding Doors *and Folding Doors*

NOTE: All doors in alcoves shall comply with the clearances for front approaches.

Fig. 25
Maneuvering Clearances at Doors *(Continued)*

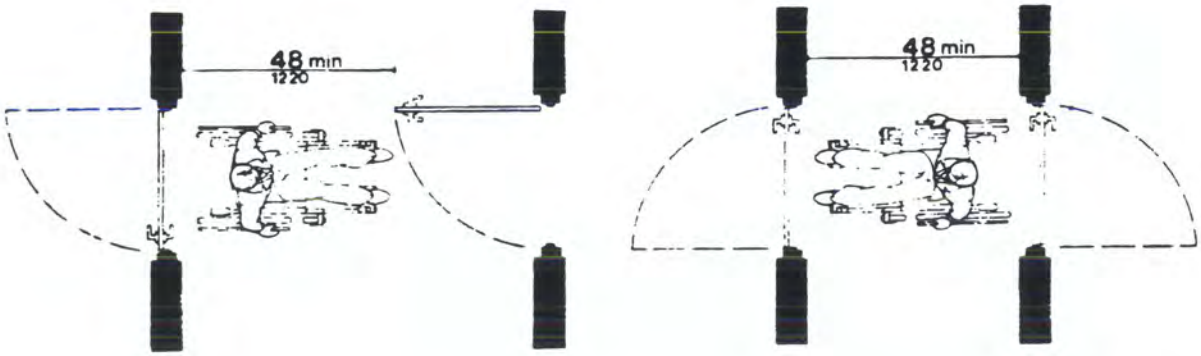

Fig. 26
Two Hinged Doors in Series

4.13 Doors

4.13.6 Maneuvering Clearances at Doors. Minimum maneuvering clearances at doors that are not automatic or power-assisted shall be as shown in Fig. 25. The floor or ground area within the required clearances shall be level and clear. Entry doors to acute care hospital bedrooms for in-patients shall be exempted from the requirement for space at the latch side of the door (see dimension "x" in Fig. 25) if the door is at least 44 in (1120 mm) wide.

4.13.7 Two Doors In Series. The minimum space between two hinged or pivoted doors in series shall be 48 in (1220 mm) plus the width of any door swinging into the space. Doors in series shall swing either in the same direction or away from the space between the doors (see Fig. 26).

4.13.8* Thresholds at Doorways. Thresholds at doorways shall not exceed 3/4 in (19 mm) in height for exterior sliding doors or 1/2 in (13 mm) for other types of doors. Raised thresholds and floor level changes at accessible doorways shall be beveled with a slope no greater than 1:2 (see 4.5.2).

4.13.9* Door Hardware. Handles, pulls, latches, locks, and other operating devices on accessible doors shall have a shape that is easy to grasp with one hand and does not require tight grasping, tight pinching, or twisting of the wrist to operate. Lever-operated mechanisms, push-type mechanisms, and U-shaped handles are acceptable designs. When sliding doors are fully open, operating hardware shall be exposed and usable from both sides. In dwelling units, only doors at accessible entrances to the unit itself shall comply with the requirements of this paragraph. Doors to hazardous areas shall have hardware complying with 4.29.3. *Mount no hardware required for accessible door passage higher than 48 in (1220 mm) above finished floor.*

4.13.10* Door Closers. If a door has a closer, then the sweep period of the closer shall be adjusted so that from an open position of 70 degrees, the door will take at least 3 seconds to move to a point 3 in (75 mm) from the latch, measured to the leading edge of the door.

4.13.11* Door Opening Force. The maximum force for pushing or pulling open a door shall be as follows:

(1) Fire doors shall have the minimum opening force allowable by the appropriate administrative authority.

(2) Other doors.

(a) exterior hinged doors: *(Reserved).*

(b) interior hinged doors: 5 lbf (22.2N)

(c) sliding or folding doors: 5 lbf (22.2N)

These forces do not apply to the force required to retract latch bolts or disengage other devices that may hold the door in a closed position.

4.13.12* Automatic Doors and Power-Assisted Doors. If an automatic door is used, then it shall comply with American National Standard for Power-Operated Doors, ANSI A156.10-1979. Slowly opening, low-powered, automatic doors shall be considered a type of custom design installation as described in paragraph 1.1.1 of ANSI A156.10-1979. Such doors shall not open to back check faster than 3 seconds and shall require no more than 15 lbf (66.6N) to stop door movement. If a power-assisted door is used, its door-opening force shall comply with 4.13.11 and its closing shall conform to the requirements in section 10 of ANSI A156.10-1979.

4.14 Entrances.

4.14.1 Minimum Number. *Entrances required to be accessible by 4.1* shall be part of an accessible route and shall comply with 4.3. Such entrances shall be connected by an accessible route to public transportation stops, to accessible parking and passenger loading zones, and to public streets or sidewalks if available (see 4.3.2(1)). They shall also be connected by an accessible route to all accessible spaces or elements within the building or facility.

4.14.2 Service Entrances. A service entrance shall not be the sole accessible entrance unless it is the only entrance to a building or facility (for example, in a factory or garage).

4.15 Drinking Fountains and Water Coolers.

4.15.1 Minimum Number. *Drinking fountains or water coolers required to be accessible by 4.1 shall comply with 4.15.*

4.15.2* Spout Height. Spouts shall be no higher than 36 in (915 mm), measured from the floor or ground surfaces to the spout outlet (see Fig. 27(a)).

4.15.3 Spout Location. The spouts of drinking fountains and water coolers shall be at the front of the unit and shall direct the water flow in a trajectory that is parallel or nearly parallel to the front of the unit. The spout shall provide a flow of water at least 4 in (100 mm) high so as to allow the insertion of a cup or glass under the flow of water.

4.15.4 Controls. Controls shall comply with 4.27.4. *Unit controls shall be front mounted or side mounted near the front edge.*

4.15.5 Clearances.

(1) Wall- and post-mounted cantilevered units shall have a clear knee space between the bottom of the apron and the floor or ground at least 27 in (685 mm) high, 30 in (760 mm) wide, and 17 in to 19 in (430 mm to 485 mm) deep (see Fig. 27(a) and (b)). Such units shall also have a minimum clear floor space 30 in by 48 in (760 mm by 1220 mm) to allow a person in a wheelchair to approach the unit facing forward.

(2) Free-standing or built-in units not having a clear space under them shall have a clear floor space at least 30 in by 48 in (760 mm by 1220 mm) that allows a person in a wheelchair to make a parallel approach to the unit (see Fig. 27(c) and (d)). This clear floor space shall comply with 4.2.4.

4.16 Water Closets.

4.16.1 General. Accessible water closets shall comply with 4.16. For water closets in *accessible* dwelling units, see 4.34.5.2.

4.16.2 Clear Floor Space. Clear floor space for water closets not in stalls shall comply with Fig. 28. Clear floor space may be arranged to allow either a left-handed or right-handed approach.

4.16.3* Height. The height of water closets shall be 17 in to 19 in (430 mm to 485 mm), measured to the top of the toilet seat (see Fig. 29(b)). *Seats shall not be sprung to return to a lifted position.*

4.16.4* Grab Bars. Grab bars for water closets not located in stalls shall comply with Fig. 29 and 4.26.

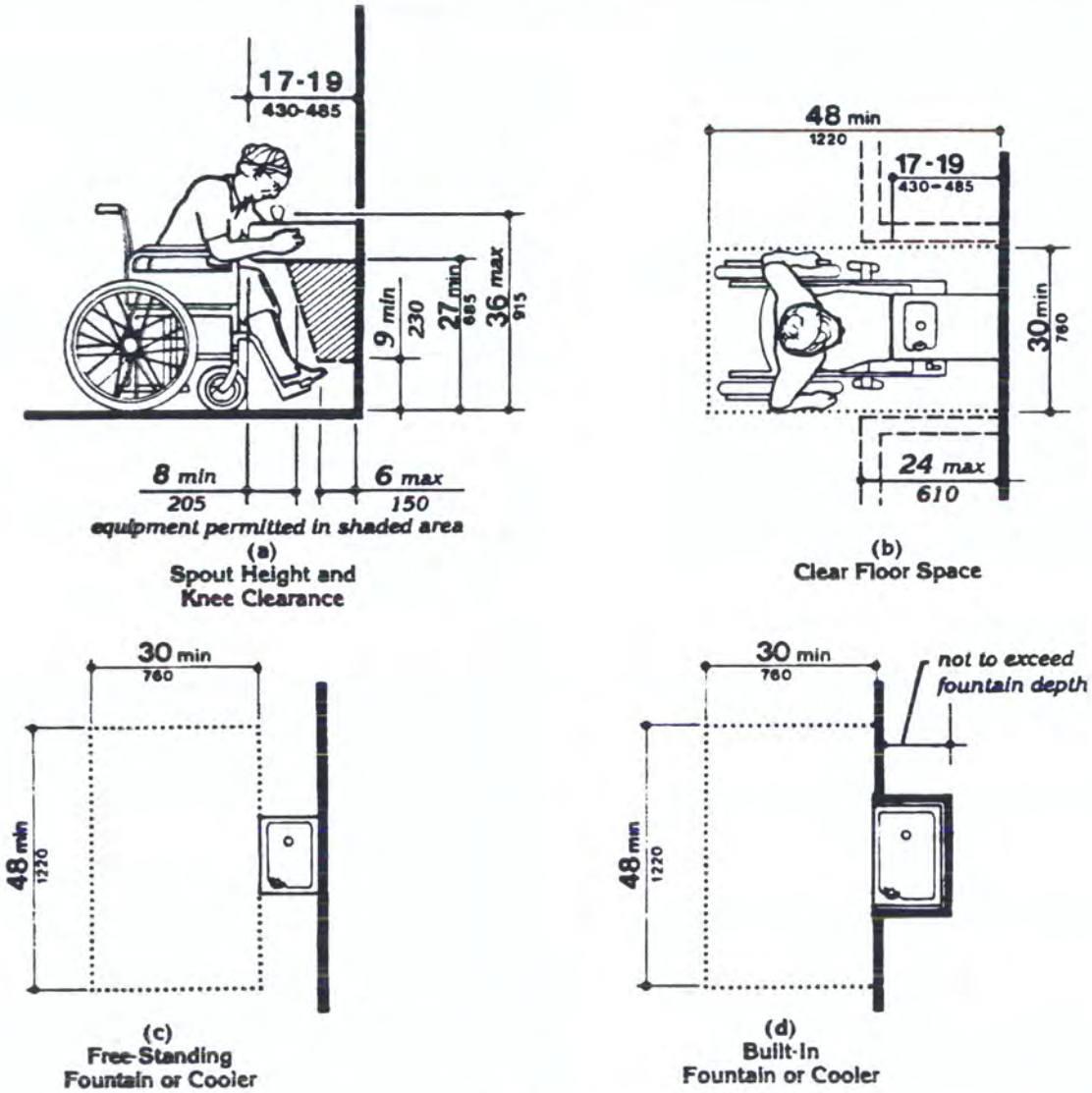

Fig. 27
Drinking Fountains and Water Coolers

4.16 Water Closets

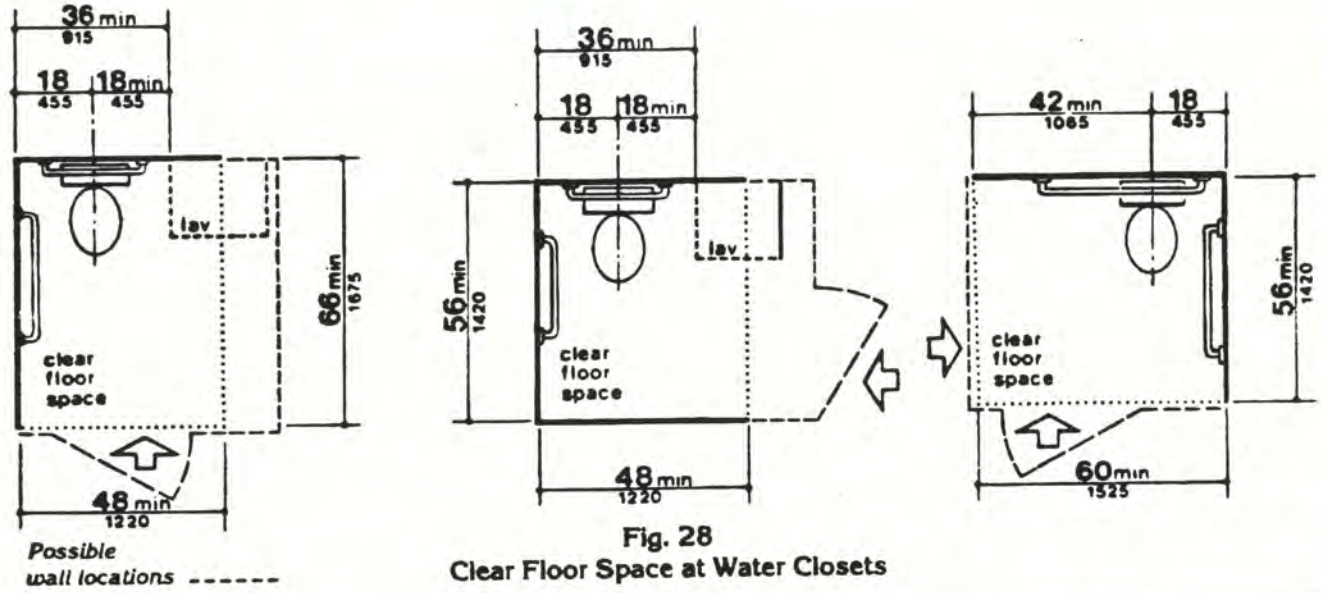

Fig. 28
Clear Floor Space at Water Closets

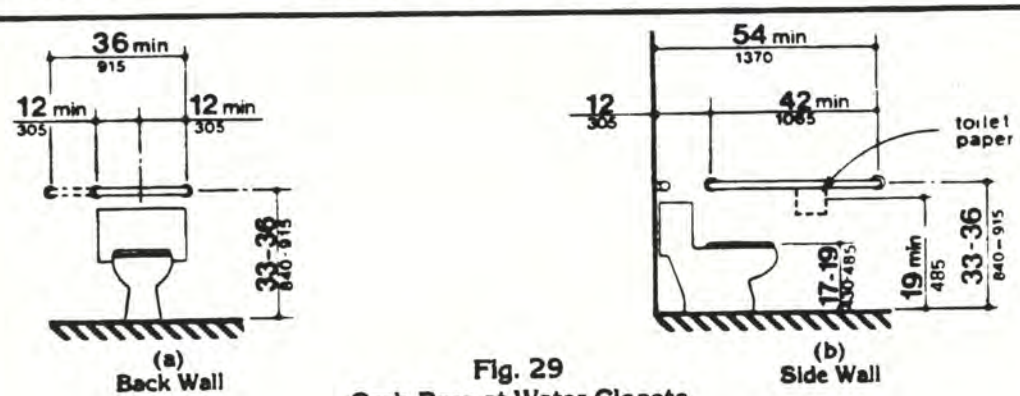

Fig. 29
Grab Bars at Water Closets

4.16.5* Flush Controls. Flush controls shall be hand operated *or automatic* and shall comply with 4.27.4. Controls for flush valves shall be mounted on the wide side of toilet areas no more than 44 in (1120 mm) above the floor.

4.16.6 Dispensers. Toilet paper dispensers shall be installed within reach, as shown in Fig. 29(b). *Dispensers that control delivery, or that do not permit continuous paper flow, shall not be used.*

4.17 Toilet Stalls.

4.17.1 Location. Accessible toilet stalls shall be on an accessible route and shall meet the requirements of 4.17.

4.17.2 Water Closets. Water closets in *accessible* stalls shall comply with 4.16.

4.17.3 Size and Arrangement. The size and arrangement of toilet stalls shall comply with Fig. 30(a). Toilet stalls with a minimum depth of 56 in (1420 mm) (see Fig. 30(a)) shall have wall-mounted water closets. If the depth of toilet stalls is increased at least 3 in (75 mm), then a floor-mounted water closet may be used. Arrangements shown for stalls may be reversed to allow either a left- or right-hand approach.

EXCEPTION: In instances of alteration work where provision of a standard stall (Fig. 30(a)) is structurally impracticable or where plumbing code requirements prevent combining existing stalls to provide space, an alternate stall (Fig. 30(b)) may be provided in lieu of the standard stall.

4.17.4 Toe Clearances. In standard stalls, the front partition and at least one side partition shall provide a toe clearance of at least 9 in (230 mm) above the floor. If the depth of the stall is greater than 60 in (1525 mm), then the toe clearance is not required.

4.17 Toilet Stalls

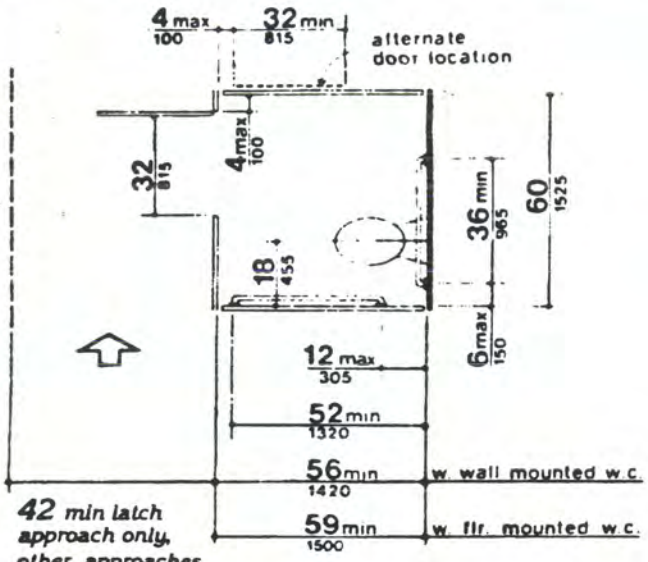

(a)
Standard Stall

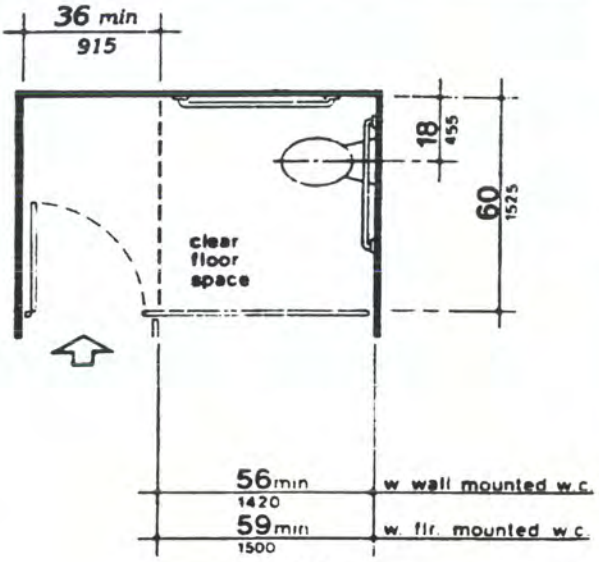

(a-1)
Standard Stall (end of row)

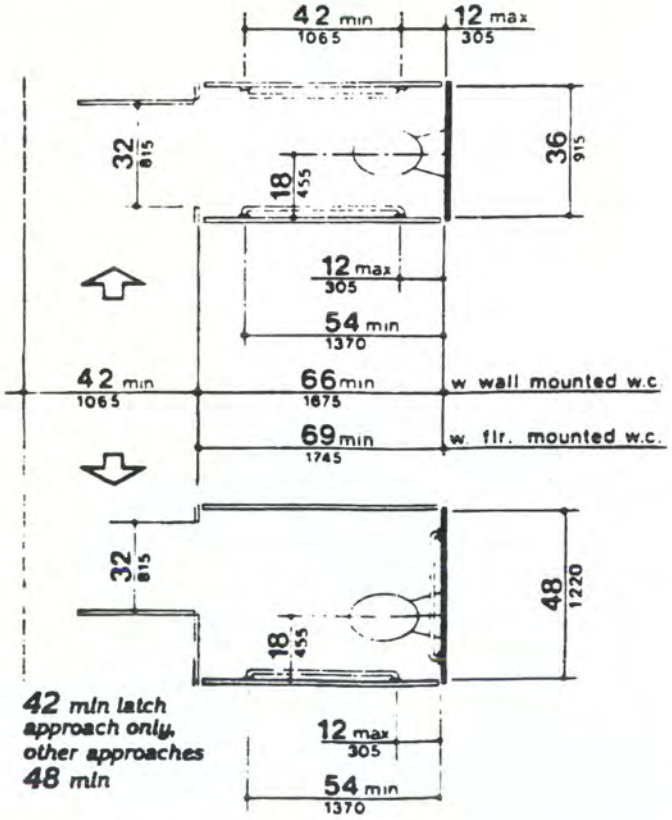

(b)
Alternate Stalls

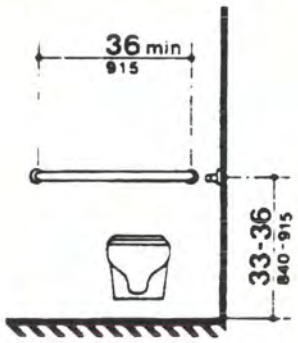

(c)
Rear Wall of Standard Stall

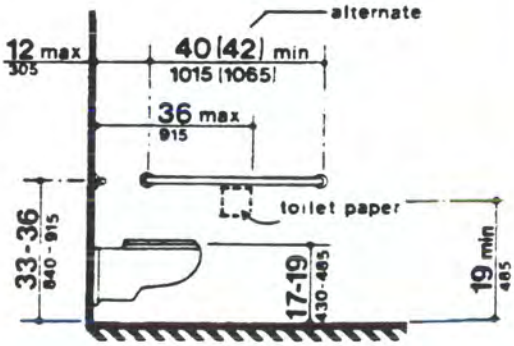

(d)
Side Walls

Fig. 30
Toilet Stalls

4.17 Toilet Stalls

4.17.5* Doors. Toilet stall doors shall comply with 4.13. *If toilet stall approach is from the latch side of the stall door, clearance between the door side of the stall and any obstruction may be reduced to a minimum of 42 in (1065 mm).*

4.17.6 Grab Bars. Grab bars complying with the length and positioning shown in Fig. 30(a), (b), (c), and (d) shall be provided. Grab bars may be mounted with any desired method as long as they have a gripping surface at the locations shown and do not obstruct the required clear floor area. Grab bars shall comply with 4.26.

4.18 Urinals.

4.18.1 General. Accessible urinals shall comply with 4.18.

4.18.2 Height. Urinals shall be stall-type or wall-hung with an elongated rim at a maximum of 17 in (430 mm) above the floor.

4.18.3 Clear Floor Space. A clear floor space 30 in by 48 in (760 mm by 1220 mm) shall be provided in front of urinals to allow forward approach. This clear space shall adjoin or overlap an accessible route and shall comply with 4.2.4. *Urinal shields that do not extend beyond the front edge of the urinal rim may be provided with 29 in (735 mm) clearance between them.*

4.18.4 Flush Controls. Flush controls shall be hand operated or automatic, and shall comply with 4.27.4, and shall be mounted no more than 44 in (1120 mm) above the floor.

4.19 Lavatories and Mirrors.

4.19.1 General. The requirements of 4.19 shall apply to lavatory fixtures, vanities, and built-in lavatories.

4.19.2 Height and Clearances. Lavatories shall be mounted with *the rim or counter surface no higher than 34 in (865 mm) above the finished floor. Provide* a clearance of at least 29 in (735 mm) from the floor to the bottom of the apron. Knee and toe clearance shall comply with Fig. 31.

4.19.3 Clear Floor Space. A clear floor space 30 in by 48 in (760 mm by 1220 mm) complying with 4.2.4 shall be provided in front of a lavatory to allow forward approach. Such clear floor space shall adjoin or overlap an accessible route and shall extend a maximum of 19 in (485 mm) underneath the lavatory (see Fig. 32).

4.19.4 Exposed Pipes and Surfaces. Hot water and drain pipes under lavatories shall be insulated or otherwise covered. There shall be no sharp or abrasive surfaces under lavatories.

4.19.5 Faucets. Faucets shall comply with 4.27.4. Lever-operated, push-type, and electronically controlled mechanisms are examples of acceptable designs. Self-closing valves are allowed if the faucet remains open for at least 10 seconds.

4.19.6* Mirrors. Mirrors shall be mounted with the bottom edge *of the reflecting surface* no higher than 40 in (1015 mm) from the floor (see Fig. 31).

4.20 Bathtubs.

4.20.1 General. Accessible bathtubs shall comply with 4.20. For bathtubs in *accessible* dwelling units, see 4.34.5.4.

4.20.2 Floor Space. Clear floor space in front of bathtubs shall be as shown in Fig. 33.

4.20.3 Seat. An in-tub seat or a seat at the head end of the tub shall be provided as shown in Fig. 33 and 34. The structural strength of seats and their attachments shall comply with 4.26.3. Seats shall be mounted securely and shall not slip during use.

4.20.4 Grab Bars. Grab bars complying with 4.26 shall be provided as shown in Fig. 33 and 34.

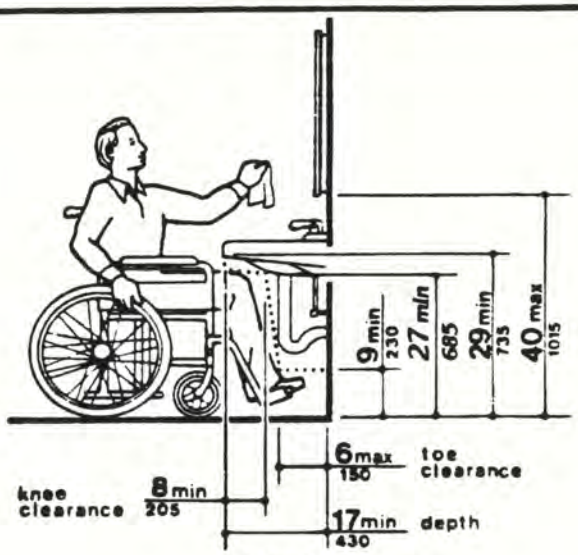

Fig. 31
Lavatory Clearances

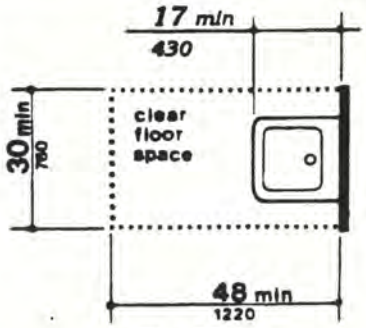

Fig. 32
Clear Floor Space at Lavatories

4.20 Bathtubs

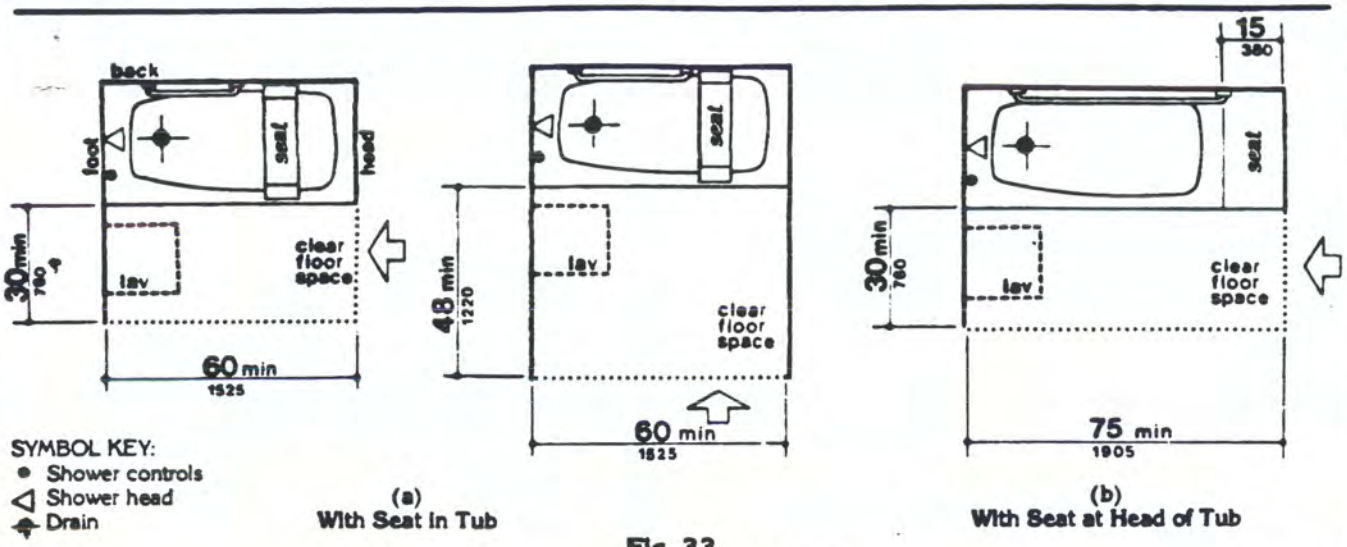

(a)
With Seat in Tub

(b)
With Seat at Head of Tub

Fig. 33
Clear Floor Space at Bathtubs

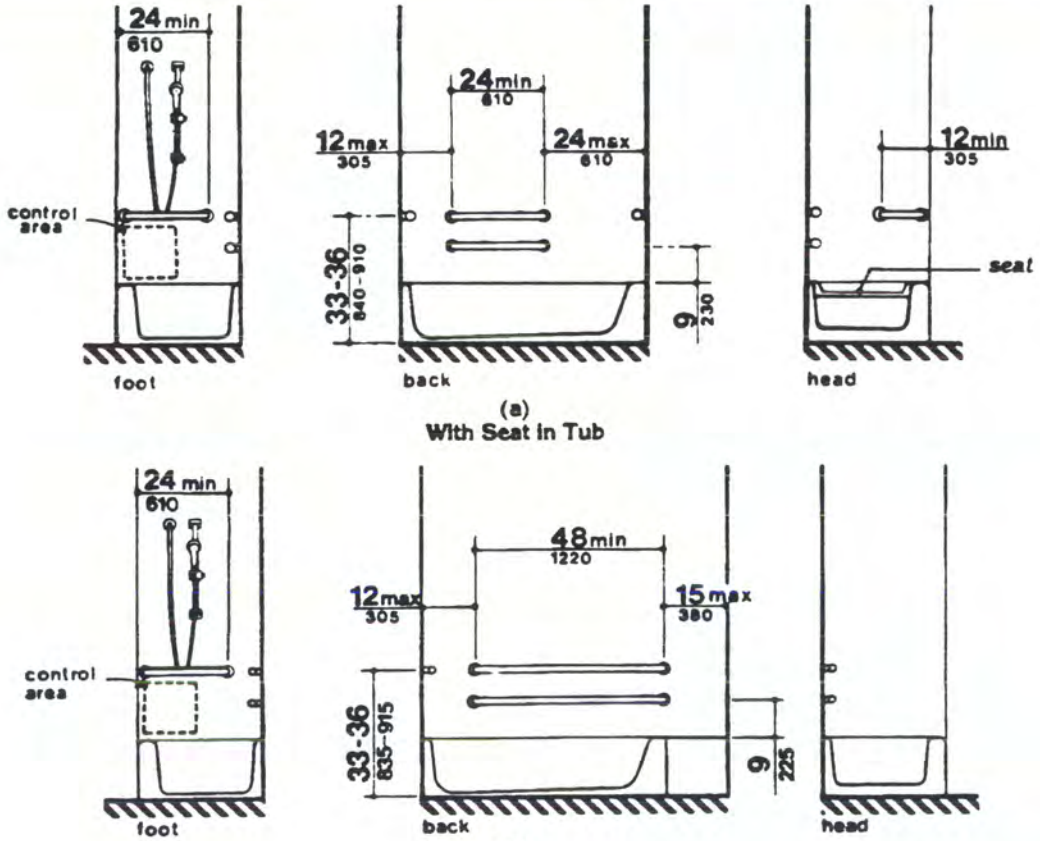

(a)
With Seat in Tub

(b)
With Seat at Head of Tub

Fig. 34
Grab Bars at Bathtubs

4.20 Bathtubs

4.20.5 Controls. Faucets and other controls complying with 4.27.4 shall be located as shown in Fig. 34.

4.20.6 Shower Unit. A shower spray unit with a hose at least 60 in (1525 mm) long that can be used as a fixed shower head or as a hand-held shower shall be provided.

4.20.7 Bathtub Enclosures. If provided, enclosures for bathtubs shall not obstruct controls or transfer from wheelchairs onto bathtub seats or into tubs. Enclosures on bathtubs shall not have tracks mounted on their rims.

4.21 Shower Stalls.

4.21.1* General. Accessible shower stalls shall comply with 4.21. For shower stalls in *accessible* dwelling units, see 4.34.5.5.

4.21.2 Size and Clearances. Shower stall size and clear floor space shall comply with Fig. 35(a) or (b). The shower stall in Fig. 35(a) shall be 36 in by 36 in (915 mm by 915 mm). The shower stall in Fig. 35(b) will fit into the space required for a bathtub.

4.21.3 Seat. A seat shall be provided in shower stalls 36 in by 36 in (915 mm by 915 mm) and shall be as shown in Fig. 36. The seat shall be mounted 17 in to 19 in (430 mm to 485 mm) from the bathroom floor and shall extend the full depth of the stall. The seat shall be on the wall opposite the controls. The structural strength of seats and their attachments shall comply with 4.26.3.

4.21.4 Grab Bars. Grab bars complying with 4.26 shall be provided as shown in Fig. 37.

4.21.5 Controls. Faucets and other controls complying with 4.27.4 shall be located as shown in Fig. 37. In shower stalls 36 in by 36 in (915 mm by 915 mm), all controls, faucets, and the shower unit shall be mounted on the side wall opposite the seat.

4.21.6 Shower Unit. A shower spray unit with a hose at least 60 in (1525 mm) long that can be used as a fixed shower head or as a hand-held shower shall be provided.

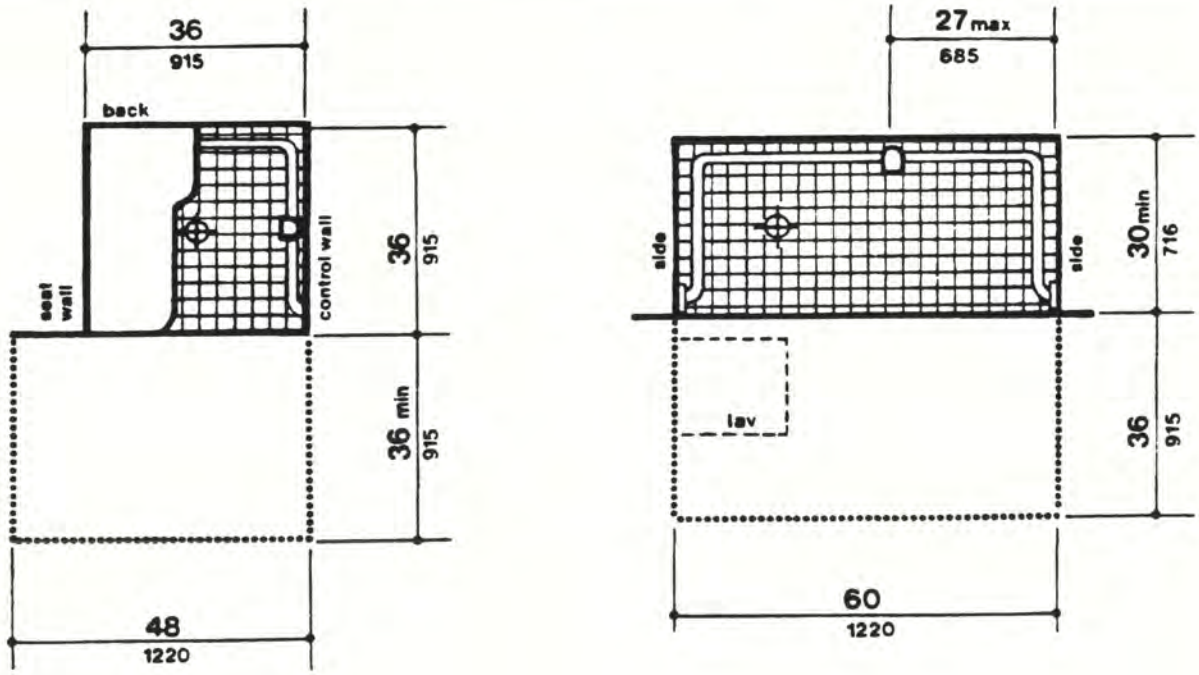

(a)
36-in by 36-in
(915-mm by 915-mm) Stall

(b)
30-in by 60-in
(760-mm by 1525-mm) Stall

Fig. 35
Shower Size and Clearances

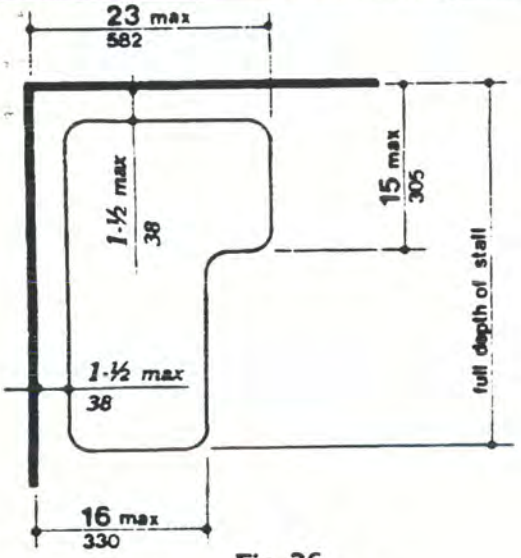

Fig. 36
Shower Seat Design

EXCEPTION: In unmonitored facilities where vandalism is a consideration, a fixed shower head mounted at 48 in (1220 mm) above the shower floor may be used in lieu of a hand-held shower head.

4.21.7 Curbs. If provided, curbs in shower stalls 36 in by 36 in (915 mm by 915 mm) shall be no higher than *1/2 in (13 mm)*. Shower stalls that are 30 in by 60 in (760 mm by 1525 mm) shall not have curbs.

4.21.8 Shower Enclosures. If provided, enclosures for shower stalls shall not obstruct controls or obstruct transfer from wheelchairs onto shower seats.

4.22 Toilet Rooms.

4.22.1 Minimum Number. *Toilet facilities required to be accessible by 4.1* shall comply with 4.22. Accessible toilet rooms shall be on an accessible route.

4.22.2 Doors. All doors to accessible toilet rooms shall comply with 4.13. Doors shall not swing into the clear floor space required for any fixture.

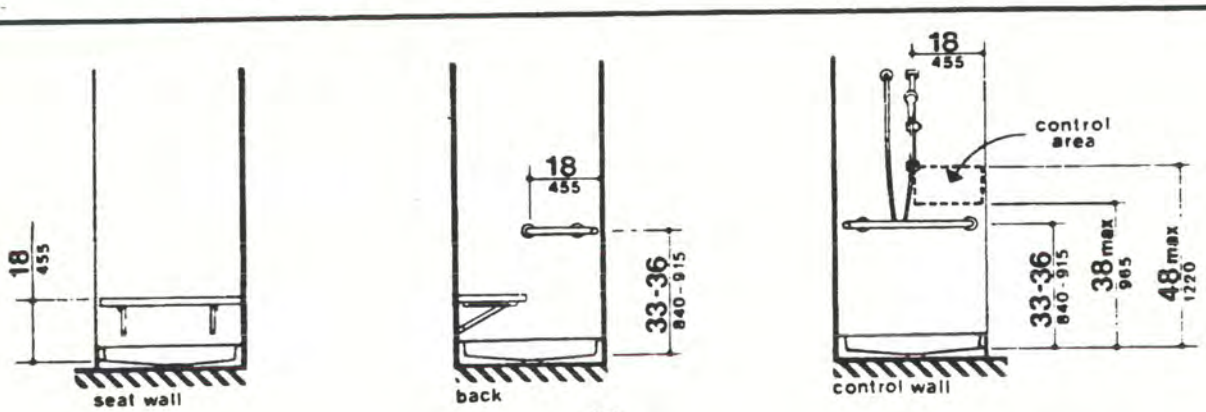

(a)
36-in by 36-in (915-mm by 915-mm) Stall

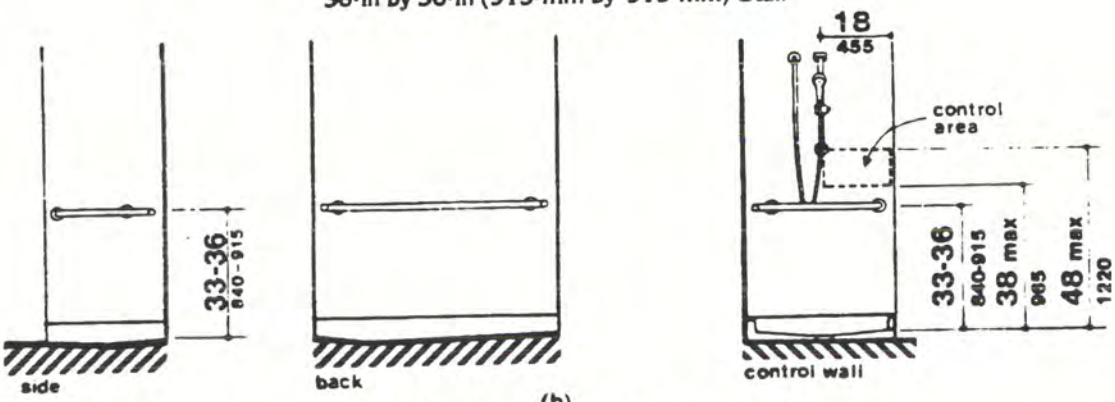

(b)
30-in by 60-in (760-mm by 1525-mm) Stall

Fig. 37
Grab Bars at Shower Stalls

4.22 Toilet Rooms

4.22.3 Clear Floor Space. The accessible fixtures and controls required in 4.22.4, 4.22.5, 4.22.6, and 4.22.7 shall be on an accessible route. An unobstructed turning space complying with 4.2.3 shall be provided within an accessible toilet room. The clear floor space at fixtures and controls, the accessible route, and the turning space may overlap.

EXCEPTION: In toilet rooms with only one water closet and one lavatory, a clear floor space of 30 in by 60 in (815 mm by 1525 mm) may be used in lieu of the unobstructed turning space.

4.22.4 Water Closets. If toilet stalls are provided, then at least one shall comply with 4.17; its water closet shall comply with 4.16. If water closets are not in stalls, then at least one shall comply with 4.16.

4.22.5 Urinals. If urinals are provided, *then* at least one shall comply with 4.18.

4.22.6 Lavatories and Mirrors. If lavatories and mirrors are provided, *then* at least one of each shall comply with 4.19.

4.22.7 Controls and Dispensers. If controls, dispensers, receptacles, or other equipment is provided, *then* at least one of each shall be on an accessible route and shall comply with 4.27.

4.23 Bathrooms, Bathing Facilities, and Shower Rooms.

4.23.1 Minimum Number. Bathrooms, bathing facilities, or shower rooms *required to be accessible by 4.1* shall comply with 4.23 and shall be on an accessible route. For adaptable bathrooms in accessible dwelling units, see 4.34.5.

4.23.2 Doors. Doors to accessible bathrooms shall comply with 4.13. Doors shall not swing into the floor space required for any fixture.

4.23.3 Clear Floor Space. The accessible fixtures and controls required in 4.23.4, 4.23.5, 4.23.6, 4.23.7, 4.23.8, and 4.23.9 shall be on an accessible route. An unobstructed turning space complying with 4.2.3 shall be provided within an accessible bathroom. The clear floor spaces at fixtures and controls, the accessible route, and the turning space may overlap.

EXCEPTION: In bathrooms with only one water closet, one lavatory, and one bathtub or shower, a clear floor space of 30 in by 60 in (760 mm by 1525 mm) may be used in lieu of the unobstructed turning space.

4.23.4 Water Closets. If toilet stalls are provided, then at least one shall comply with 4.17; its water closet shall comply with 4.16. If water closets are not in stalls, then at least one shall comply with 4.16.

4.23.5 Urinals. If urinals are provided, then at least one shall comply with 4.18.

4.23.6 Lavatories and Mirrors. If lavatories and mirrors are provided, then at least one of each shall comply with 4.19.

4.23.7 Controls and Dispensers. If controls, dispensers, receptacles, or other equipment is provided, *then* at least one of each shall be on an accessible route and shall comply with 4.27.

4.23.8 Bathing and Shower Facilities. If tubs or showers are provided, then at least one accessible tub that complies with 4.20 or at least one accessible shower that complies with 4.21 shall be provided.

4.23.9* Medicine Cabinets. If medicine cabinets are provided, at least one shall be located with a usable shelf no higher than 44 in (1120 mm) above the floor space. The floor space shall comply with 4.2.4.

4.24 Sinks.

4.24.1 General. *Sinks required to be accessible by 4.1* shall comply with 4.24. Sinks in kitchens of accessible dwelling units shall comply with 4.34.6.5.

4.24.2 Height. Sinks shall be mounted with the counter or rim no higher than 34 in (865 mm) from the floor.

4.24.3 Knee Clearance. Knee clearance that is *at least* 27 in (685 mm) high, 30 in (760 mm) wide, and 19 in (485 mm) deep shall be provided underneath sinks.

4.24.4 Depth. Each sink shall be a maximum of 6-1/2 in (165 mm) deep.

4.24.5 Clear Floor Space. A clear floor space at least 30 in by 48 in (760 mm by 1220 mm) complying with 4.2.4 shall be provided in front of a sink to allow forward approach. The clear floor space shall be on an accessible route and shall extend a maximum of 19 in (485 mm) underneath the sink (see Fig. 32).

4.24.6 Exposed Pipes and Surfaces. Hot water and drain pipes exposed under sinks shall be insulated or otherwise covered. There shall be no sharp or abrasive surfaces under sinks.

4.24.7 Faucets. Faucets shall comply with 4.27.4. Lever-operated, push-type, touch-type, or electronically controlled mechanisms are acceptable designs.

4.25 Storage.

4.25.1 General. *Fixed* storage facilities such as cabinets, shelves, closets, and drawers *required to be accessible by 4.1* shall comply with 4.25.

4.25.2 Clear Floor Space. A clear floor space at least 30 in by 48 in (760 mm by 1220 mm) complying with 4.2.4 that allows either a forward or parallel approach by a person using a wheelchair shall be provided at accessible storage facilities.

4.25.3 Height. Accessible storage spaces shall be within at least one of the reach ranges specified in 4.2.5 and 4.2.6. Clothes rods shall be a maximum of 54 in (1370 mm) from the floor (see Fig. 38).

4.25.4 Hardware. Hardware for accessible storage facilities shall comply with 4.27.4. Touch latches and U-shaped pulls are acceptable.

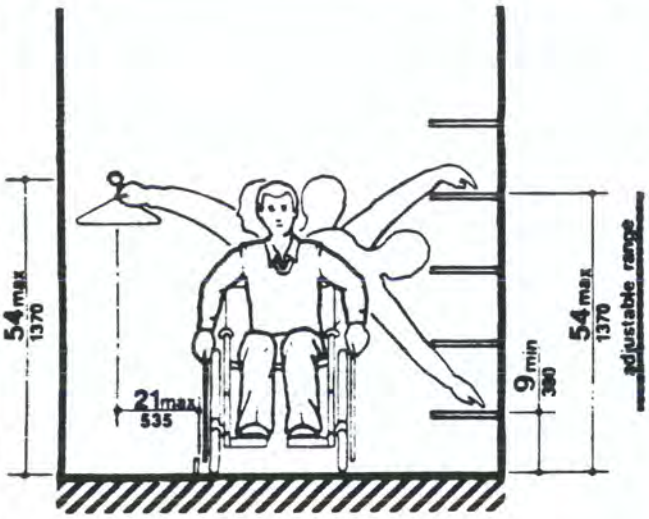

Fig. 38
Storage Shelves and Closets

4.26 Handrails, Grab Bars, and Tub and Shower Seats.

4.26.1* General. All handrails, grab bars, and tub and shower seats *required to be accessible by 4.1, 4.8, or 4.9* shall comply with 4.26.

4.26.2* Size and Spacing of Grab Bars and Handrails. The diameter or width of the gripping surfaces of a handrail or grab bar shall be 1-1/4 in to 1-1/2 in (32 mm to 38 mm), or the shape shall provide an equivalent gripping surface. If handrails or grab bars are mounted adjacent to a wall, the space between the wall and the grab bar shall be 1-1/2 in (38 mm) (see Fig. 39(a), (b), and (c)). Handrails may be located in a recess if the recess is a maximum of 3 in (75 mm) deep and extends at least 18 in (455 mm) above the top of the rail (see Fig. 39(d)).

4.26.3 Structural Strength. The structural strength of grab bars, tub and shower seats, fasteners, and mounting devices shall meet the following specification:

(1) Bending stress in a grab bar or seat induced by the maximum bending moment from the application of 250 lbf (1112N) shall be less than the allowable stress for the material of the grab bar or seat.

(2) Shear stress induced in a grab bar or seat by the application of 250 lbf (1112N) shall be less than the allowable shear stress for the material of the grab bar or seat. If the connection between the grab bar or seat and its mounting bracket or other support is considered to be fully restrained, then direct and torsional shear stresses shall be totaled for the combined shear stress, which shall not exceed the allowable shear stress.

(3) Shear force induced in a fastener or mounting device from the application of 250 lbf (1112N) shall be less than the allowable lateral load of either the fastener or mounting device or the supporting structure, whichever is the smaller allowable load.

(4) Tensile force induced in a fastener by a direct tension force of 250 lbf (1112N) plus the maximum moment from the application of 250 lbf (1112N) shall be less than the allowable withdrawal and the supporting structure.

(5) Grab bars shall not rotate within their fittings.

4.26.4 Eliminating Hazards. A handrail or grab bar and any wall or other surface adjacent to it shall be free of any sharp or abrasive elements. Edges shall have a minimum radius of 1/8 in (3.2 mm).

4.27 Controls and Operating Mechanisms.

4.27.1 General. Controls and operating mechanisms *required to be accessible by 4.1* shall comply with 4.27.

4.27.2 Clear Floor Space. Clear floor space complying with 4.2.4 that allows a forward or a parallel approach by a person using a wheelchair shall be provided at controls, dispensers, receptacles, and other operable equipment.

4.27.3* Height. The highest operable part of all controls, dispensers, receptacles, and other operable equipment shall be placed within at least one of the reach ranges specified in 4.2.5 and 4.2.6. Except where the use of special equipment dictates otherwise, electrical and communications system receptacles on walls shall be mounted no less than 15 in (380 mm) above the floor.

4.27.4 Operation. Controls and operating mechanisms shall be operable with one hand and shall not require tight grasping, pinching, or twisting of the wrist. The force required to activate controls shall be no greater than 5 lbf (22.2 N)

4.28 Alarms.

4.28.1 General. *Alarm systems required to be accessible by 4.1 shall comply with 4.28.*

4.28.2* Audible Alarms. If provided, audible emergency alarms shall produce a sound that exceeds the prevailing equivalent sound level in the room or space by at least 15 decibels or exceeds any maximum sound level with a duration of 30 seconds by 5 decibels, whichever is louder. Sound levels for alarm signals shall not exceed 120 decibels.

4.28.3* Visual Alarms. If provided, electrically powered internally illuminated emergency exit signs shall flash as a visual emergency alarm in conjunction with audible emergency alarms. The flashing frequency of visual alarm devices shall be less than 5 Hz. If such alarms use electricity from the building as a power source, then they shall be installed on the same system as the audible emergency alarms.

4.28 Alarms

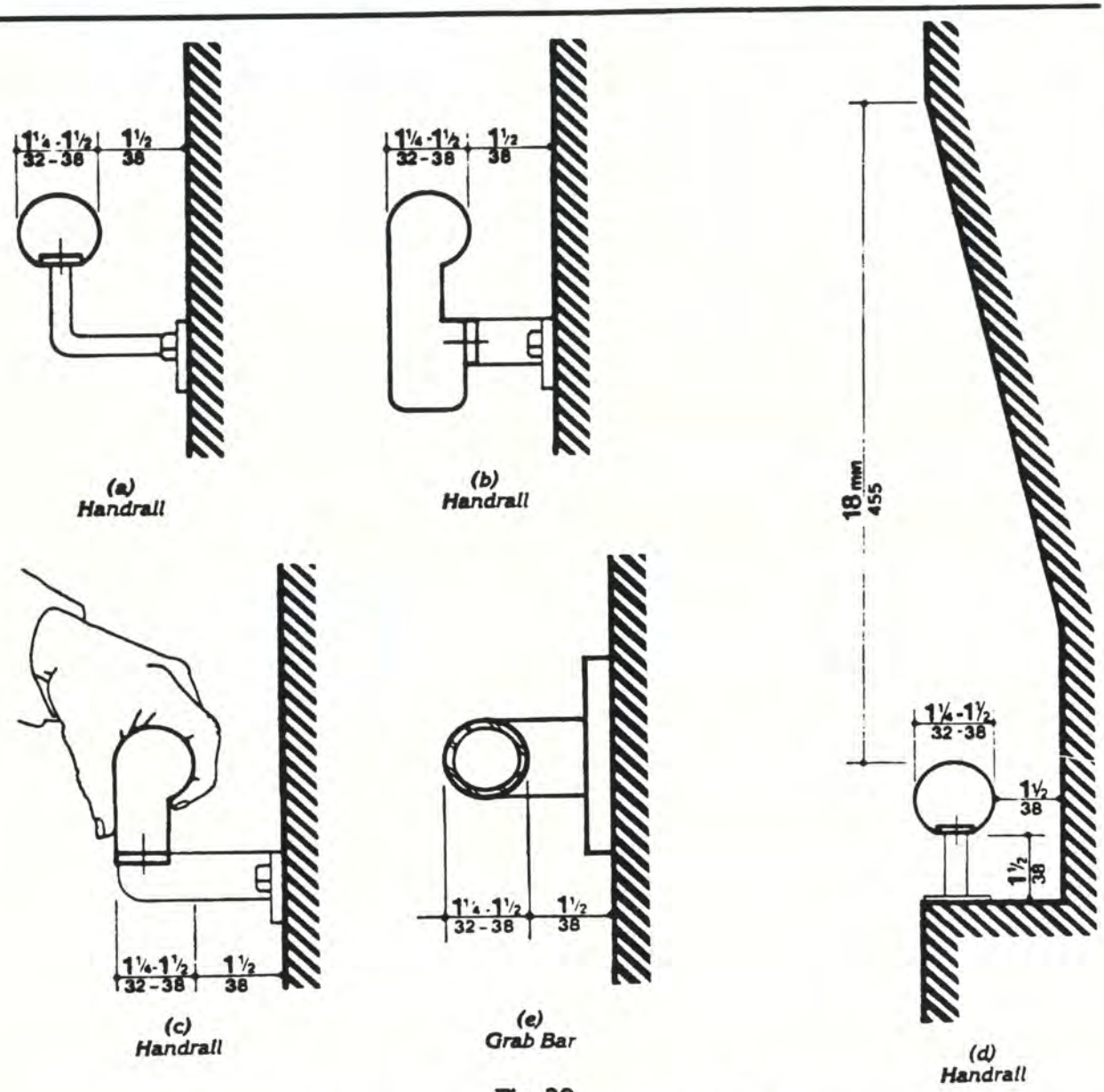

Fig. 39
Size and Spacing of Handrails and Grab Bars

EXCEPTIONS:

(1) Visual alarm devices that are mounted adjacent to emergency exit signs may be used in lieu of flashing exit signs.

(2) Specialized systems utilizing advanced technology may be substituted for the visual systems specified above if equivalent protection is afforded handicapped users of the building or facility.

4.28.4* Auxiliary Alarms. Accessible sleeping accommodations shall have a visual alarm connected to the building emergency alarm system or shall have a standard 110-volt electrical receptacle into which such an alarm could be connected. Instructions for use of the auxiliary alarm or connection shall be provided.

4.29 Tactile Warnings.

4.29.1 General. Tactile warnings *required to be accessible by 4.1* shall comply with 4.29.

4.29.2* Tactile Warnings on Walking Surfaces. *(Reserved).*

4.29.3* Tactile Warnings on Doors to Hazardous Areas. Doors that lead to areas that might prove dangerous to a blind person (for example, doors to loading platforms, boiler rooms, stages, and the like) shall be made identifiable to the touch by a textured surface on the door handle, knob, pull, or other operating hardware. This textured surface may be made by knurling or roughing or by a material applied to the contact surface. Such textured surfaces shall not be provided for emergency exit doors or any doors other than those to hazardous areas.

4.29.4 Tactile Warnings at Stairs. *(Reserved).*

4.29.5* Tactile Warnings at Hazardous Vehicular Areas. *(Reserved).*

4.29.6* Tactile Warnings at Reflecting Pools. *(Reserved).*

4.29.7* Standardization. Textured surfaces for tactile *door* warnings shall be standard within a building, facility, site, or complex of buildings.

4.30 Signage.

***4.30.1* General.** *Signage required to be accessible by 4.1 shall comply with 4.30.*

4.30.2* Character Proportion. Letters and numbers on signs shall have a width-to-height ratio between 3:5 and 1:1 and a stroke width-to-height ratio between 1:5 and 1:10.

4.30.3* Color Contrast. Characters and symbols shall contrast with their background — either light characters on a dark background or dark characters on a light background.

***4.30.4* Raised or Indented Characters or Symbols.** Letters and numbers on signs shall be raised or incised 1/32 in (0.8 mm) minimum and shall be sans serif characters. Raised characters or symbols shall be at least 5/8 in (16 mm) high, but no higher than 2 in (50 mm). Indented characters or symbols shall have a stroke width of at least 1/4 in (6 mm). Symbols or pictographs on signs shall be raised or indented 1/32 in (0.8 mm) minimum.

4.30.5 Symbols of Accessiblity. Accessible facilities *required to be* identified *by 4.1, shall use* the international symbol of accessibility. The symbol shall be displayed as shown in Fig. 43.

4.30.6 *Mounting Location and Height.* *Interior signage shall be located alongside the door on the latch side and shall be mounted at a height of between 54 in and 66 in (1370 mm and 1675 mm) above the finished floor.*

4.31 Telephones.

4.31.1 General. *Public telephones required to be accessible by 4.1 shall comply with 4.31.*

4.31.2 Clear Floor or Ground Space. A clear floor or ground space at least 30 in by 48 in (760 mm by 1220 mm) that allows either a forward or parallel approach by a person using a wheelchair shall be provided at telephones (see Fig. 44). The clear floor or ground space shall comply with 4.2.4. Bases, enclosures, and fixed seats shall not impede approaches to telephones by people who use wheelchairs.

(a)
Proportions

(b)
Display Conditions

Fig. 43
International Symbol of Accessibility

4.31.3* Mounting Height. The highest operable part of the telephone shall be within the reach ranges specified in 4.2.5 or 4.2.6.

4.31.4 *Protruding Objects.* *Telephones shall comply with 4.4.*

4.31.5* Equipment for Hearing Impaired People. Telephones shall be equipped with a receiver that generates a magnetic field in the area of the receiver cap. *Volume controls shall be provided in accordance with 4.1.2.*

4.31.6 Controls. Telephones shall have pushbutton controls where service for such equipment is available.

4.31.7 Telephone Books. Telephone books, if provided, shall be located *in a position that complies with the reach ranges specified in 4.2.5 and 4.2.6.*

*** Amendments issued 3/28/89 appear on Page 152, App. IV.**

4.31 Telephones

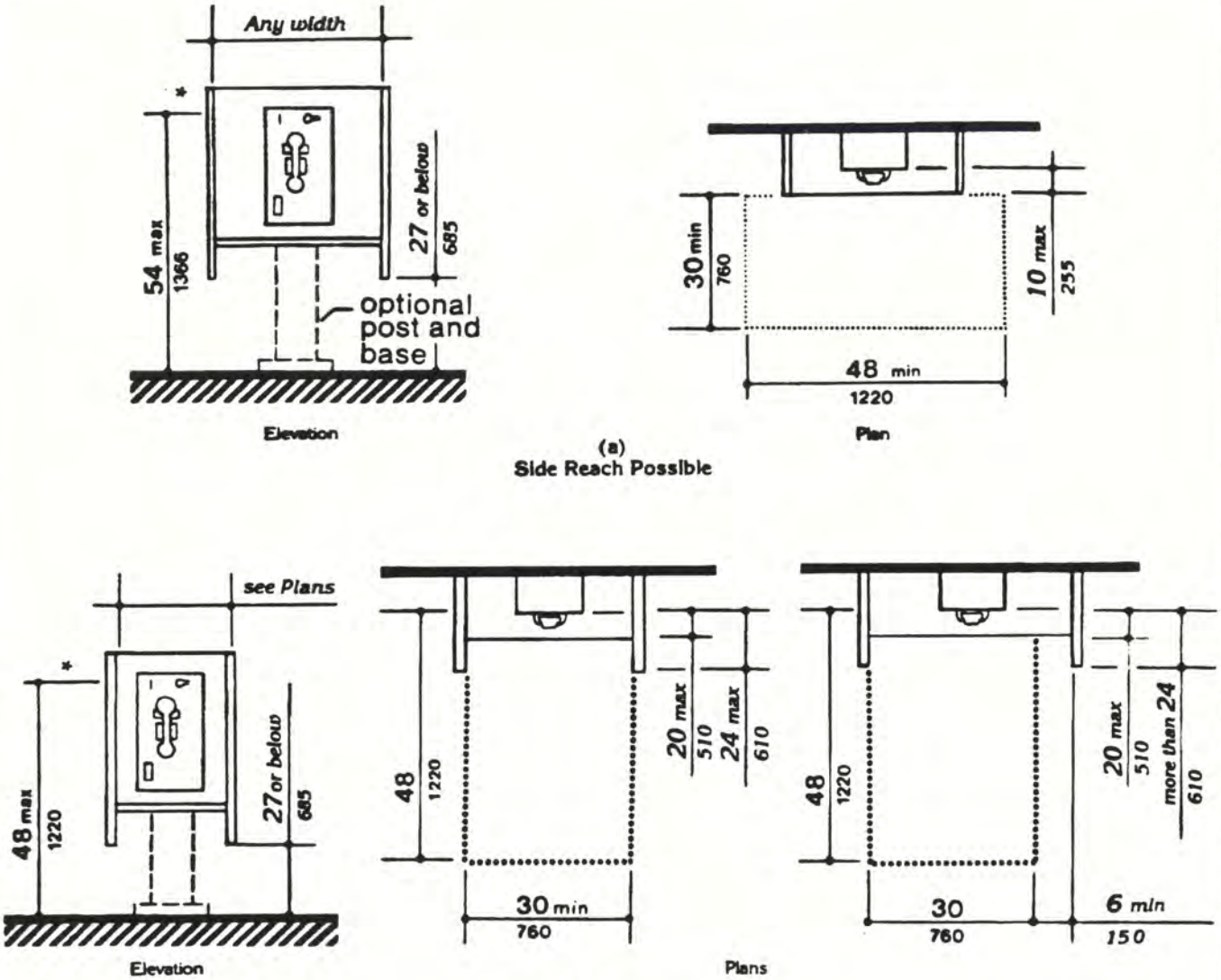

Height to highest operable parts which are essential to basic operation of telephone.

Fig. 44
Mounting Heights and Clearances for Telephones

4.31.8 Cord Length. The cord from the telephone to the handset shall be at least 29 in (735 mm) long.

4.32 Seating, Tables, and Work Surfaces.

4.32.1 Minimum Number. Fixed or built-in seating, tables, or work surfaces *required to be accessible by 4.1 shall comply with 4.32.*

4.32.2 Seating. If seating spaces for people in wheelchairs are provided at tables, counters, or work surfaces, clear floor space complying with 4.2.4 shall be provided. Such clear floor space shall not overlap knee space by more than 19 in (485 mm) (see Fig. 45).

4.32.3 Knee Clearances. If seating for people in wheelchairs is provided at tables, counters, and work surfaces, knee spaces at least 27 in (685 mm) high, 30 in (760 mm) wide, and 19 in (485 mm) deep shall be provided (see Fig. 45).

4.34 Dwelling Units

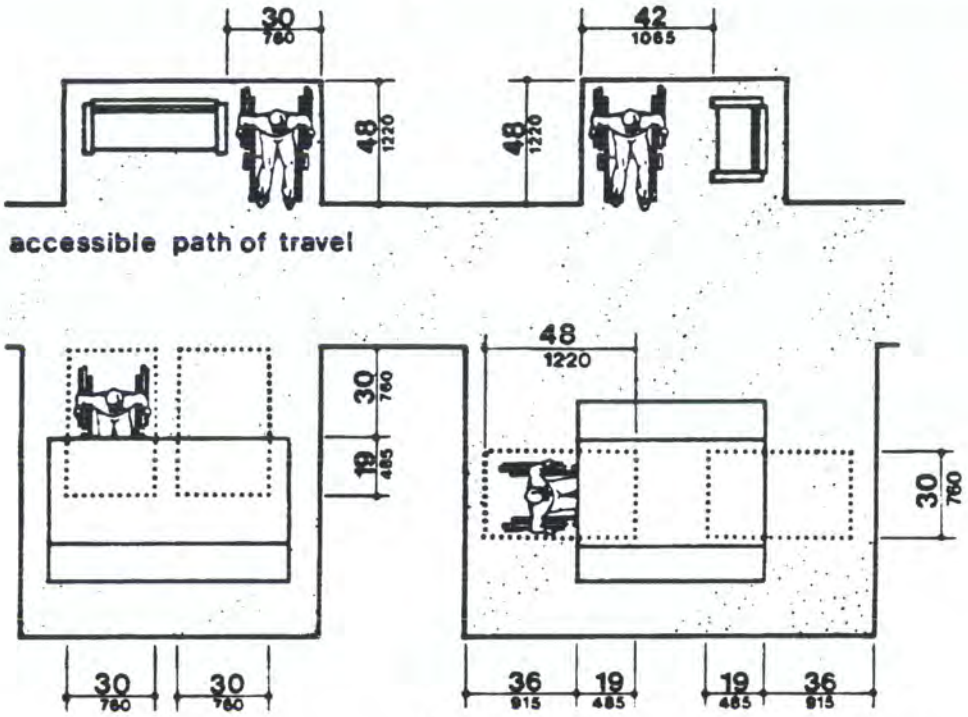

Fig. 45
Minimum Clearances for Seating and Tables

4.32.4* Height of Work Surfaces. The tops of tables and work surfaces shall be from 28 in to 34 in (710 mm to 865 mm) from the floor or ground.

4.33 Assembly Areas.

4.33.1 Minimum Number. Assembly *and associated areas required to be accessible by 4.1 shall comply with 4.33.*

4.33.2* Size of Wheelchair Locations. Each wheelchair location shall provide minimum clear ground or floor spaces as shown in Fig. 46.

4.33.3* Placement of Wheelchair Locations. Wheelchair areas shall be an integral part of any fixed seating plan and shall be dispersed throughout the seating area. They shall adjoin an accessible route that also serves as a means of egress in case of emergency and shall be located to provide lines of sight comparable to those for all viewing areas.

EXCEPTION: Accessible viewing positions may be clustered for bleachers, balconies, and other areas having sight lines that require slopes of greater than 5 percent. Equivalent accessible viewing positions may be located on levels having accessible egress.

4.33.4 Surfaces. The ground or floor at wheelchair locations shall be level and shall comply with 4.5.

4.33.5 Access to Performing Areas. An accessible route shall connect wheelchair seating locations with performing areas, including stages, arena floors, dressing rooms, locker rooms, and other spaces used by performers.

4.33.6* Placement of Listening Systems. If the listening system provided serves individual fixed seats, then such seats shall be located within a 50 ft (15 m) viewing distance of the stage or playing area and shall have a complete view of the stage or playing area.

4.33.7* Types of Listening Systems. Audio loops and radio frequency systems are two acceptable types of listening systems.

4.34 Dwelling Units.

4.34.1 General. The requirements of 4.34 apply to dwelling units *required to be accessible by 4.1.*

4.34.2* Minimum Requirements. An accessible dwelling unit shall be on an accessible route. An accessible dwelling unit shall have the following accessible elements and spaces as a minimum:

(1) Common spaces and facilities serving individual accessible dwelling units (for example, entry walks, trash disposal facilities, and mail boxes) shall comply with 4.2 through 4.33.

4.34 Dwelling Units

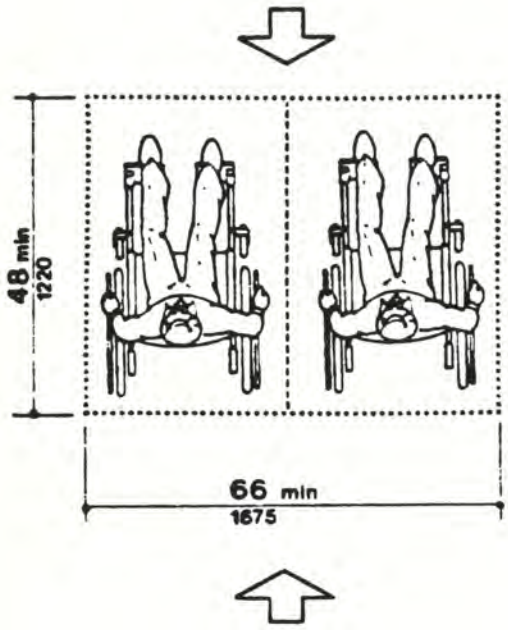

(a)
Forward or Rear Access

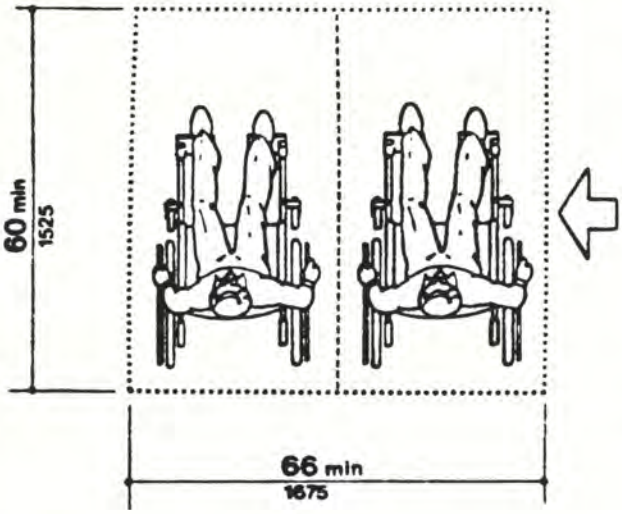

(b)
Side Access

Fig. 46
Space Requirements for Wheelchair Seating Spaces in Series

(2) Accessible spaces shall have maneuvering space complying with 4.2.2 and 4.2.3 and surfaces complying with 4.5.

(3) At least one accessible route complying with 4.3 shall connect the accessible entrances with all accessible spaces and elements within the dwelling units.

(4) *See 4.1.1(5)(d) — Parking.*

(5) *Removed and reserved.*

(6) Doors to and in accessible spaces that are intended for passage shall comply with 4.13, *except that the provisions of 4.13.9 apply only to the doors at accessible entrances to the unit itself.*

(7) At least one accessible entrance to the dwelling unit shall comply with 4.14.

(8) Storage in accessible spaces in dwelling units, including cabinets, shelves, closets, and drawers, shall comply with 4.25.

(9) All controls in accessible spaces shall comply with 4.27. Those portions of heating, ventilating, and airconditioning equipment requiring regular, periodic maintenance and adjustment by the resident of a dwelling shall be accessible to people in wheelchairs. If air distribution registers must be placed in or close to ceilings for proper air circulation, this specification shall not apply to the registers.

(10) Emergency alarms *as required by 4.1 and* complying with 4.28.4 shall be provided in the dwelling unit.

(11) *Removed and reserved.*

(12) At least one full bathroom shall comply with 4.34.5. A full bathroom shall include a water closet, a lavatory, and a bathtub or a shower.

(13) The kitchen shall comply with 4.34.6.

(14) If laundry facilities are provided, they shall comply with 4.34.7.

(15) The following spaces shall be accessible and shall be on an accessible route:

(a) The living area.

(b) The dining area.

(c) The sleeping area, or the bedroom in one bedroom dwelling units, or at least two bedrooms or sleeping spaces in dwelling units with two or more bedrooms.

(d) Patios, terraces, balconies, carports, and garages, if provided with the dwelling unit.

4.34.3 Adaptability. The specifications for 4.34.5 and 4.34.6 *include* the concept of adaptability. *Accessible dwelling units may be designed for either permanent accessibility or adaptability.*

4.34.4 Consumer Information. To ensure that the existence of adaptable features will be known to the owner or occupant of a dwelling, the following con-

sumer information shall be provided in each *adaptable* dwelling unit available for *occupancy:*

(1) Notification of the alternate heights available for the kitchen counter and sink, and the existence of removable cabinets and bases, if provided, under counters, sinks, and lavatories.

(2) Notification of the provisions for the installation of grab bars at toilets, bathtubs, and showers.

(3) Notification that the dwelling unit is equipped to have a visual emergency alarm installed.

(4) Identification of the location where information and instructions are available for changing the height of counters, removing cabinets and bases, installing a visual emergency alarm system, and installing grab bars.

(5) Notification that the dwelling unit has been designed in accordance with this *Uniform Federal Accessibility Standards.*

In addition, the *parties who will be responsible for making adaptations* shall be provided with the following information:

(1) Instructions for adjusting or replacing kitchen counter and sink heights and for removing cabinets.

(2) A scale drawing showing methods and locations for the installation of grab bars.

(3) A scale drawing showing the location of adjustable or replaceable counter areas and removable cabinets.

(4) Identification of the location of any equipment and parts required for adjusting or replacing counter tops, cabinets, and sinks.

(5) Instructions for installing a visual emergency alarm system, if the dwelling unit is equipped for such an installation.

4.34.5* Bathrooms. *Accessible or* adaptable bathrooms shall be on an accessible route and shall comply with the requirements of 4.34.5.

4.34.5.1 Doors. Doors shall not swing into the clear floor space required for any fixture.

4.34.5.2 Water Closets.

(1) Clear floor space at the water closet shall be as shown in Fig. 47(a). The water closet may be located with the clear area at either the right or left side of the toilet.

(2) The height of the water closet shall be at least 15 in (380 mm), *and no more than 19 in (485 mm),* measured to the top of the toilet seat.

(3) Structural reinforcement or other provisions that will allow installation of grab bars shall be provided in the locations shown in Fig. 47(b). If provided, grab bars shall be installed as shown in Fig. 29 and shall comply with 4.26.

(4) The toilet paper dispenser shall be installed within reach as shown in Fig. 47(b).

4.34.5.3 Lavatory, Mirrors, and Medicine Cabinets.

(1) The lavatory and mirrors shall comply with 4.22.6.

(2) If a cabinet is provided under the lavatory in adaptable bathrooms, then it shall be removable to provide the clearances specified in 4.22.6.

(3) If a medicine cabinet is provided above the lavatory, then the bottom of the medicine cabinet shall be located with a usable shelf no higher than 44 in (1120 mm) above the floor.

4.34.5.4 Bathtubs. If a bathtub is provided, then it shall have the following features:

(1) Floor space. Clear floor space at bathtubs shall be as shown in Fig. 33.

(2) Seat. An in-tub seat or a seat at the head end of the tub shall be provided as shown in Fig. 33 and 34. The structural strength of seats and their attachments shall comply with 4.26.3. Seats shall be mounted securely and shall not slip during use.

(3) Grab bars. Structural reinforcement or other provisions that will allow installation of grab bars shall be provided in the locations shown in Fig. 48. If provided, grab bars shall be installed as shown in Fig. 34 and shall comply with 4.26.

(4) Controls. Faucets and other controls shall be located as shown in Fig. 34 and shall comply with 4.27.4.

(5) Shower unit. A shower spray unit with a hose at least 60 in (1525 mm) long that can be used as a fixed shower head or as a hand-held shower shall be provided.

4.34.5.5 Showers. If a shower is provided, it shall have the following features:

(1) Size and clearances. Shower stall size and clear floor space shall comply with either Fig. 35(a) or (b). The shower stall in Fig. 35(a) shall be 36 in by 36 in (915 mm by 915 mm). The shower stall in Fig. 35(b) will fit into the same space as a standard 60 in (1525 mm) long bathtub.

(2) Seat. A seat shall be provided in the shower stall in Fig. 35(a) as shown in Fig. 36. The seat shall be 17 in to 19 in (430 mm to 485 mm) high measured from the bathroom floor and shall extend the full depth of the stall. The seat shall be on the wall opposite the controls. The structural strength of seats and their attachments shall comply with 4.26.3. Seats shall be mounted securely and shall not slip during use.

(3) Grab bars. Structural reinforcement or other provisions that will allow installation of grab bars shall be provided in the locations shown in Fig. 49. If provided, grab bars shall be installed as shown in Fig. 37 and shall comply with 4.26.

4.34 Dwelling Units

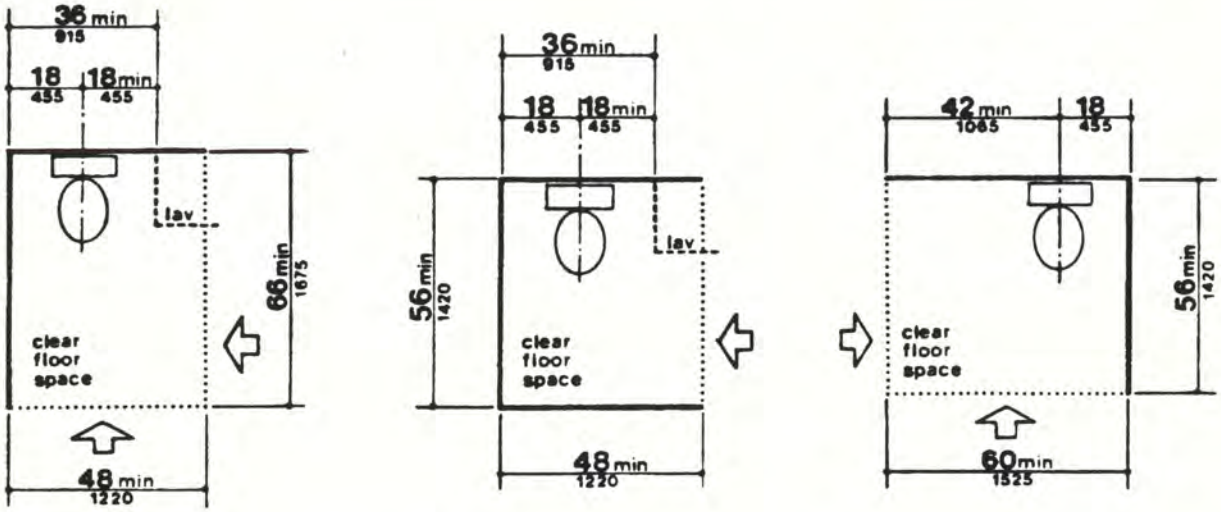

(a)
Clear Floor Space for Adaptable Bathrooms

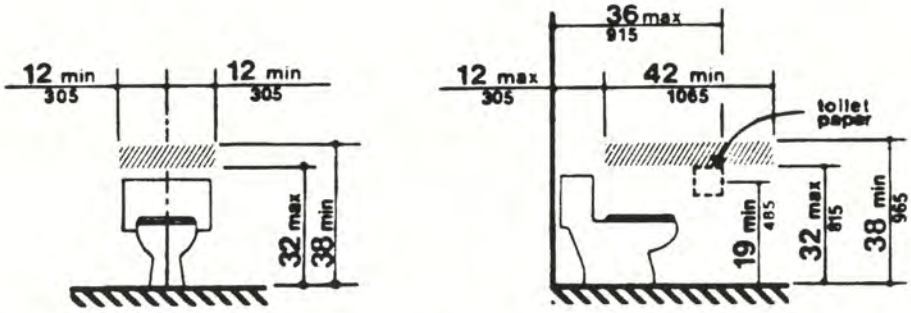

NOTE: The hatched areas are reinforced to receive grab bars.

(b)
Reinforced Areas for Installation of Grab Bars

Fig. 47
Water Closets in Adaptable Bathrooms

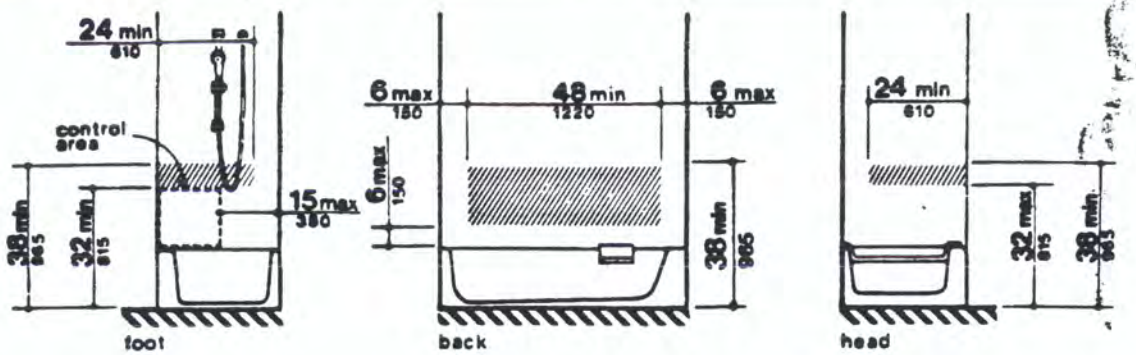

(a)
With Seat in Tub

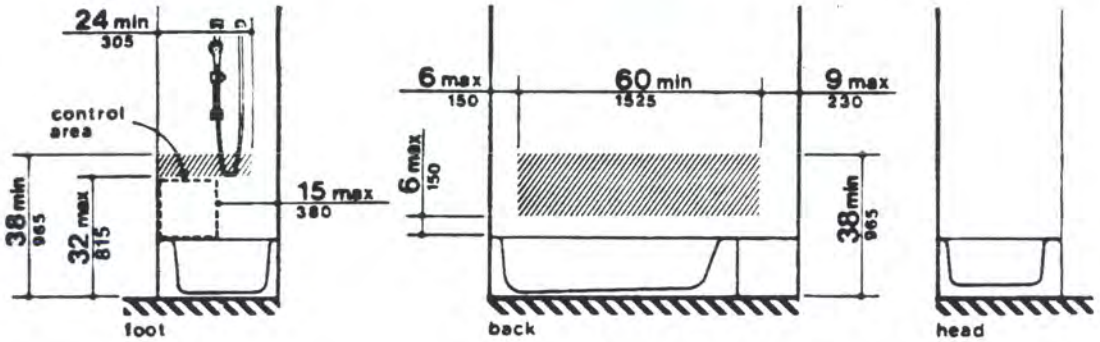

(b)
With Seat at Head of Tub

NOTE: The hatched areas are reinforced to receive grab bars.

Fig. 48
Location of Grab Bars and Controls of Adaptable Bathtubs

(4) Controls. Faucets and other controls shall be located as shown in Fig. 37 and shall comply with 4.27.4. In the shower stall in Fig. 35(a), all controls, faucets, and the shower unit shall be mounted on the side wall opposite the seat.

(5) Shower unit. A shower spray unit with a hose at least 60 in (1525 mm) long that can be used as a fixed shower head at various heights or as a hand-held shower shall be provided.

4.34.5.6 Bathtub and Shower Enclosures. Enclosures for bathtubs or shower stalls shall not obstruct controls or transfer from wheelchairs onto shower or bathtub seats. Enclosures on bathtubs shall not have tracks mounted on their rims.

4.34.5.7 Clear Floor Space. Clear floor space at fixtures may overlap.

4.34.6 Kitchens. *Accessible or adaptable* kitchens and their components shall be on an accessible route and shall comply with the requirements of 4.34.6.

4.34.6.1* Clearance. Clearances between all opposing base cabinets, counter tops, appliances, or walls shall be 40 in (1015 mm) minimum, except in U-shaped kitchens, where such clearance shall be 60 in (1525 mm) minimum.

4.34.6.2 Clear Floor Space. A clear floor space at least 30 in by 48 in (760 mm by 1220 mm) complying with 4.2.4 that allows either a forward or a parallel approach by a person in a wheelchair shall be provided at all appliances in the kitchen, including the range or cooktop, oven, refrigerator/freezer, dishwasher, and trash compactor. Laundry equipment located in the kitchen shall comply with 4.34.7.

4.34 Dwelling Units

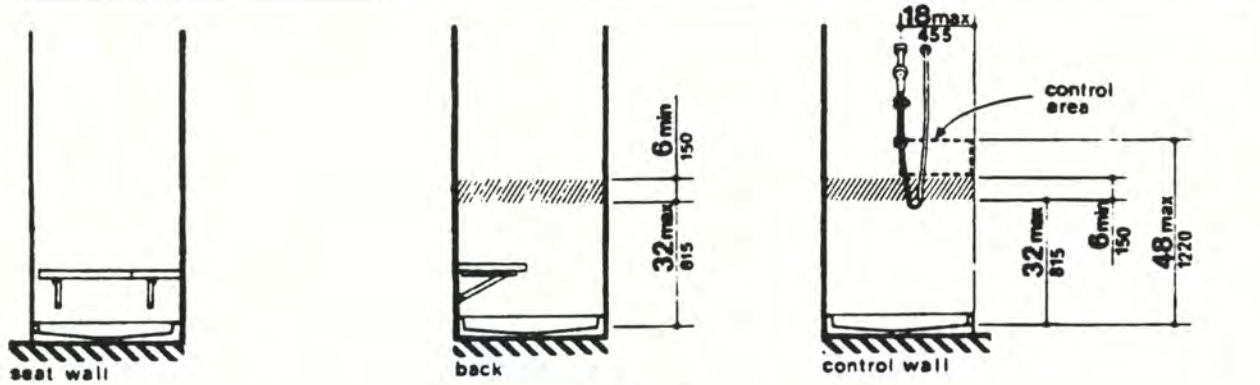

(a)
36-in by 36-in (915-mm by 915-mm) Stall

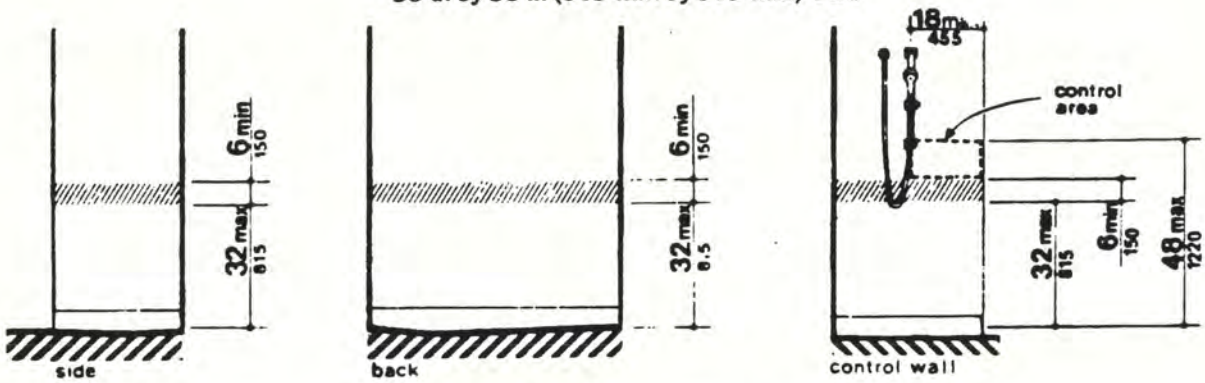

(b)
30-in by 60-in (750-mm by 1525-mm) Stall

NOTE. The hatched areas are reinforced to receive grab bars.

Fig. 49
Location of Grab Bars and Controls of Adaptable Showers

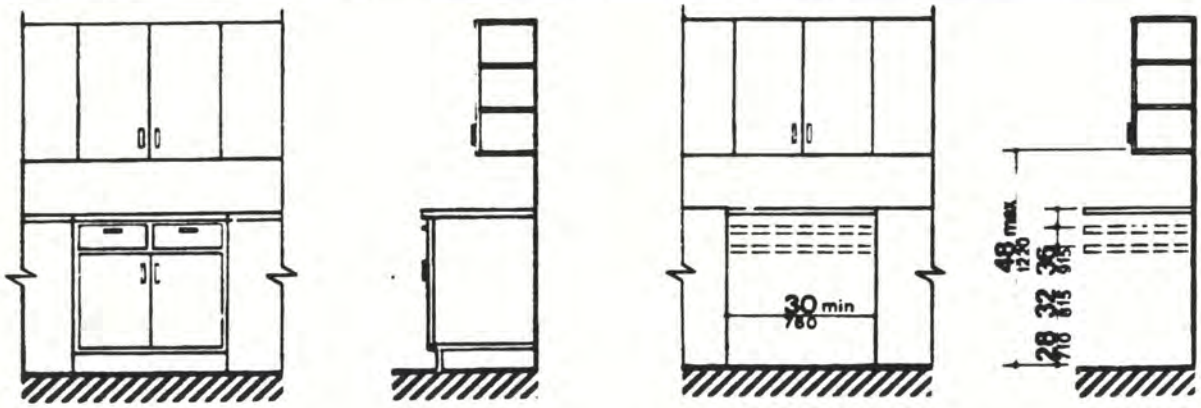

(a)
Before Removal of Cabinets and Base

(b)
Cabinets and Base Removed and Height Alternatives

Fig. 50
Counter Work Surface

4.34.6.3 Controls. All controls in kitchens shall comply with 4.27.

4.34.6.4 Work Surfaces. At least one 30 in (760 mm) section of counter shall provide a work surface that complies with the following requirements (see Fig. 50):

(1) The counter shall be *mounted at a maximum height of 34 in (865 mm) above the floor, measured from the floor to the top of the counter surface, or shall be* adjustable or replaceable as a unit to provide alternative heights of 28 in, 32 in, and 36 in (710 mm, 815 mm, and 915 mm), measured from the top of the counter surface.

(2) Base cabinets, if provided, shall be removable under the full 30 in (760 mm) minimum frontage of the counter. The finished floor shall extend under the counter to the wall.

(3) Counter thickness and supporting structure shall be 2 in (50 mm) maximum over the required clear area.

(4) A clear floor space 30 in by 48 in (760 mm by 1220 mm) shall allow a forward approach to the counter. Nineteen inches (485 mm) maximum of the clear floor space may extend underneath the counter. The knee space shall have a minimum clear width of 30 in (760 mm) and a minimum clear depth of 19 in (485 mm).

(5) There shall be no sharp or abrasive surfaces under such counters.

4.34.6.5* Sink. The sink and surrounding counter shall comply with the following requirements (see Fig. 51):

(1) The sink and surrounding counter shall be *mounted at a maximum height of 34 in (865 mm) above the floor, measured from the floor to the top of the counter surface, or shall* be adjustable or replaceable as a unit to provide alternative heights of 28 in, 32 in, and 36 in (710 mm, 815 mm, and 915 mm), measured from the floor to the top of the counter surface or sink rim. The total width of sink and counter area shall be 30 in (760 mm).

(2) Rough-in plumbing shall be located to accept connections of supply and drain pipes for sinks mounted at the height of 28 in (710 mm).

(3) The depth of a sink bowl shall be no greater than 6-1/2 in (165 mm). Only one bowl of double-or triple-bowl sinks needs to meet this requirement.

(4) Faucets shall comply with 4.27.4. Lever-operated or push-type mechanisms are two acceptable designs.

(5) Base cabinets, if provided, shall be removable under the full 30 in (760 mm) minimum frontage of the sink and surrounding counter. The finished flooring shall extend under the counter to the wall.

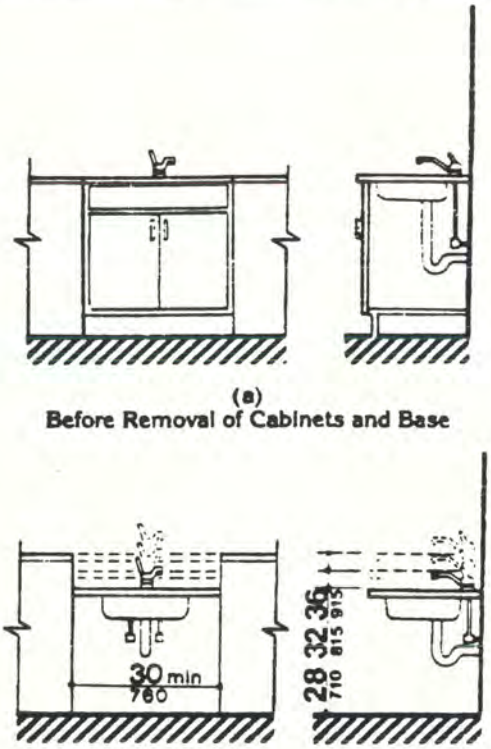

(a)
Before Removal of Cabinets and Base

(b)
Cabinets and Base Removed and Height Alternatives

Fig. 51
Kitchen Sink

(6) Counter thickness and supporting structure shall be 2 in (50 mm) maximum over the required clear space.

(7) A clear floor space 30 in by 48 in (760 mm by 1220 mm) shall allow forward approach to the sink. Nineteen inches (485 mm) maximum of the clear floor space may extend underneath the sink. The knee space shall have a clear width of 30 in (760 mm) and a clear depth of 19 in (485 mm).

(8) There shall be no sharp or abrasive surfaces under sinks. Hot water and drain pipes under sinks shall be insulated or otherwise covered.

4.34.6.6* Ranges and Cooktops. Ranges and cooktops shall comply with 4.34.6.2 and 4.34.6.3. If ovens or cooktops have knee spaces underneath, then they shall be insulated or otherwise protected on the exposed contact surfaces to prevent burns, abrasions, or electrical shock. The clear floor space may overlap the knee space, if provided, by 19 in (485 mm) maximum. The location of controls for ranges and cook-tops shall not require reaching across burners.

4.34 Dwelling Units

4.34.6.7* Ovens. Ovens shall comply with 4.34.6.2 and 4.34.6.3. Ovens shall be of the self-cleaning type or be located adjacent to an adjustable height counter with knee space below (see Fig. 52). For side-opening ovens, the door latch side shall be next to the open counter space, and there shall be a pull-out shelf under the oven extending the full width of the oven and pulling out not less than 10 in (255 mm) when fully extended. Ovens shall have controls on front panels; they may be located on either side of the door.

4.34.6.8* Refrigerator/Freezers. Refrigerator/freezers shall comply with 4.34.6.3. *Provision shall be made for refrigerators which are:*

(1) Of the vertical side-by-side refrigerator/freezer type; or

(2) Of the over-and-under type and meet the following requirements:

(a) Have at least 50 percent of the freezer space below 54 in (1370 mm) above the floor.

(b) Have 100 percent of the refrigerator space and controls below 54 in (1370 mm).

Freezers with less than 100 percent of the storage volume within the limits specified in 4.2.5 or 4.2.6 shall be the self-defrosting type.

4.34.6.9 Dishwashers. Dishwashers shall comply with 4.34.6.2 and 4.34.6.3. Dishwashers shall have all rack space accessible from the front of the machine for loading and unloading dishes.

4.34.6.10* Kitchen Storage. Cabinets, drawers, and shelf areas shall comply with 4.25 and shall have the following features:

(1) Maximum height shall be 48 in (1220 mm) for at least one shelf of all cabinets and storage shelves mounted above work counters (see Fig. 50).

(2) Door pulls or handles for wall cabinets shall be mounted as close to the bottom of cabinet doors as possible. Door pulls or handles for base cabinets shall be mounted as close to the top of cabinet doors as possible.

4.34.7 Laundry Facilities. If laundry equipment is provided within individual accessible dwelling units, or if separate laundry facilities serve one or more accessible dwelling units, then they shall meet the requirements of 4.34.7.1 through 4.34.7.3.

4.34.7.1 Location. Laundry facilities and laundry equipment shall be on an accessible route.

4.34.7.2 Washing Machines and Clothes Dryers. Washing machines and clothes dryers in common use laundry rooms shall be front loading.

4.34.7.3 Controls. Laundry equipment shall comply with 4.27.

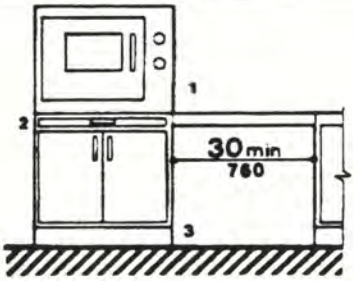

(a)
Side-Hinged Door

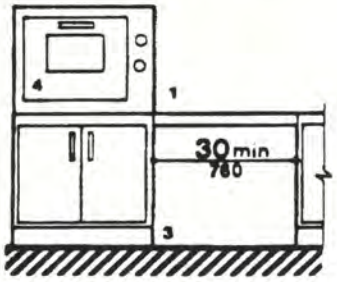

(b)
Bottom-Hinged Door

SYMBOL KEY:
1. Countertop or wall-mounted oven.
2. Pull-out board preferred with side-opening door.
3. Clear open space.
4. Bottom-hinged door.

Fig. 52
Ovens without Self-Cleaning Feature

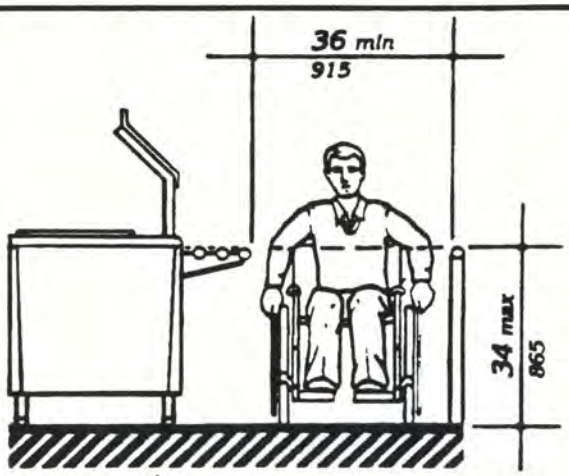

Fig. 53
Food Service Lines

5. RESTAURANTS AND CAFETERIAS.

5.1 General. *In addition to the requirements of 4.1 to 4.33, the design of at least 5 percent of all fixed seating or tables in a restaurant or cafeteria shall comply with 4.32. Access aisles between tables shall comply with 4.3. Where practical, accessible tables should be distributed throughout the space or facility. In restaurants or cafeterias where there are mezzanine levels, loggias, or raised platforms, accessibility to all such spaces is not required providing that the same services and decorative character are provided in spaces located on accessible routes.*

5.2 Food Service Lines. *Food service lines shall have a minimum clear width of 36 in (915 mm), with a preferred clear width of 42 in (1065 mm) where passage of stopped wheelchairs by pedestrians is desired. Tray slides shall be mounted no higher than 34 in (865 mm) above the floor. If self-service shelves are provided, a reasonable portion must be within the ranges shown in Fig. 53.*

5.3 Tableware Areas. *Install tableware, dishware, condiment, food and beverage display shelves, and dispensing devices in compliance with 4.2 (see Fig. 54).*

5.4 Vending Machines. *Install vending machines in compliance with 4.27.*

6. HEALTH CARE.

6.1 General. *In addition to the requirements of 4.1 to 4.33, Health Care buildings and facilities shall comply with 6.*

6.2 Entrances. *At least one accessible entrance that complies with 4.14 shall be protected from the weather by canopy or roof overhang. Such entrances shall incorporate a passenger loading zone that complies with 4.6.5 (see 4.13.6).*

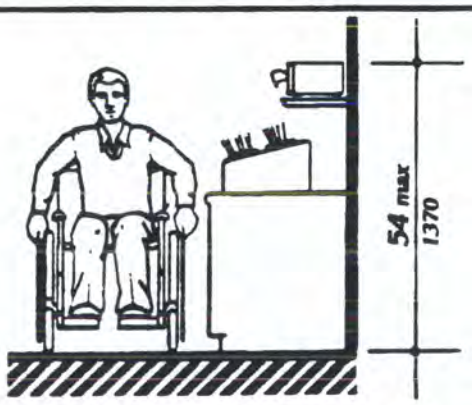

Fig. 54
Tableware Areas

6.3 Patient Bedrooms. *Provide accessible patient bedrooms in compliance with 4. Accessible patient bedrooms shall comply with the following:*

(1) *Each bedroom shall have a turning space that complies with 4.2.3, and preferably that is located near the entrance.*

(2) *Each one-bed room shall have a minimum clear floor space of 36 in (915 mm) along each side of the bed, and 42 in (1065 mm) between the foot of the bed and the wall.*

(3) *Each two-bed room shall have a minimum clear floor space of 42 in (1065 mm), preferably 48 in (1220 mm), between the foot of the bed and the wall; 36 in (915 mm) between the side of the bed and the wall; and 48 in (1220 mm) between beds.*

(4) *Each four-bed room shall have a minimum clear floor space of 48 in (1220 mm) from the foot of the bed to the foot of the opposing bed; 36 in (915 mm) between the side of the bed and the wall; and 48 in (1220 mm) between beds.*

(5) *Each bedroom shall have a door that complies with 4.13.*

6.4 Patient Toilet Rooms. *Provide each patient bedroom that is required to be accessible with an accessible toilet room that complies with 4.22 or 4.23.*

7. MERCANTILE.

7.1 General. *In addition to the requirements of 4.1 to 4.33, the design of all areas used for business transactions with the public shall comply with 7.*

7.2 Service Counters. *Where service counters exceeding 36 in (915 mm) in height are provided for standing sales or distribution of goods to the public, an auxiliary counter or a portion of the main counter shall be provided with a maximum height of between 28 in to 34 in (710 mm to 865 mm) above the floor in compliance with 4.32.4.*

7.3 Check-Out Aisles. *At least one accessible check-out aisle shall be provided in buildings or facilities with check-out aisles. Clear aisle width shall comply with 4.2.1 and maximum adjoining counter height shall not exceed 36 in (915 mm) above the floor.*

7.4 Security Bollards. *Any device used to prevent the removal of shopping carts from store premises shall not prevent access or egress to those in wheelchairs. An alternate entry that is equally convenient to that provided for the ambulatory population is acceptable.*

8.0 Libraries

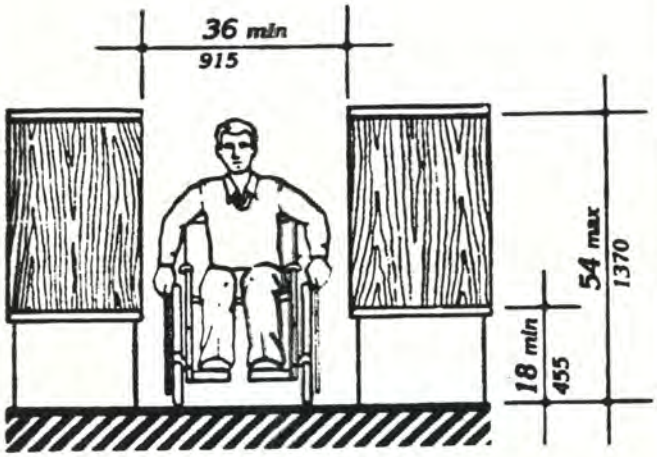

Fig. 55
Card Catalog

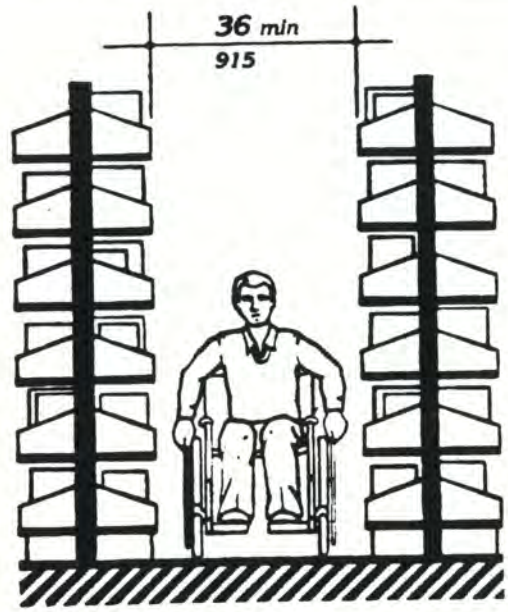

Fig. 56
Stacks

8. LIBRARIES.

8.1 General. *In addition to the requirements of 4.1 to 4.33, the design of all public areas of a library shall comply with 8, including reading and study areas, stacks, reference rooms, reserve areas, and special facilities or collections. As provided, elements such as public toilet rooms, telephones, and parking shall be accessible.*

8.2 Reading and Study Areas. *At least 5 percent or a minimum of one of each element of fixed seating, tables, or study carrels shall comply with 4.2 and 4.32. Clearances between fixed accessible tables and study carrels shall comply with 4.3.*

8.3 Check-Out Areas. *At least one lane at each check-out area shall comply with 4.32. Any traffic control or book security gates or turnstiles shall comply with 4.13.*

8.4 Card Catalogs. *Minimum clear aisle space at card catalogs, magazine displays, or reference stacks shall comply with Fig. 55. Maximum reach height shall comply with 4.2, with a height of 48 in (1220 mm) preferred, irrespective of reach allowed.*

8.5 Stacks. *Minimum clear aisle width between stacks shall comply with 4.3, with a minimum clear aisle width of 42 in (1065 mm) preferred where possible. Shelf height in stack areas is unrestricted (see Fig. 56).*

9. POSTAL FACILITIES.

9.1 General. *In addition to the requirements of 4.1 to 4.33, the design of U.S. postal facilities shall comply with the requirements of 9. In addition, employee toilet rooms, water fountains, lunchrooms, lounges, attendance-recording equipment, medical treatment rooms, emergency signals, and switches and controls shall be made accessible or adaptable in accordance with the requirements of these standards.*

9.2* Post Office Lobbies. *Where writing desks or tables are provided, a minimum of at least one writing desk or table that complies with 4.32 must be provided. Clear passageways in front of customer service counters shall be not less than 48 in (1220 mm) clear width to permit maneuvering of a wheelchair. Letter drops shall be mounted at heights that comply with 4.2.*

(1) All fixed partitions must be installed to withstand a 250-pound force applied at any point and from any direction. Avoid designs that call for, or may necessitate, non-fixed partitions in circulation routes of handicapped people.

(2) Walls where handrails are provided for handicapped people must be capable of supporting handrails designed to support a 250-pound pull force in any direction.

9.3 *Self-Service Postal Centers.* *Parcel post depositories, stamp vending machines, multi-commodity vending machines, and currency-coin changing machines shall be installed so that the operating mechanisms of all machines comply with 4.2 and 4.27. All mechanisms must be installed to permit close parallel approach by a wheelchair user.*

9.4 *Post Office Boxes.* *At least 5 percent of the post office boxes in a facility shall be accessible to wheelchair users. The total number of accessible post office boxes provided shall include a representative number of each of the standard USPS boxes currently being installed. Accessible post office boxes shall be located in the second or third set of modules from the floor, approximately 12 in to 36 in (305 mm to 915 mm) above the finished floor. Aisles between post office boxes shall be a minimum of 66 in (1675 mm) clear width.*

9.5 *Locker Rooms.* *Lockers in easily accessible areas must be provided for use by handicapped people. When double-tier lockers are used, only the bottom row of lockers may be assigned for use by wheelchair users. When full length lockers are used, all hooks, shelves, etc., intended for use by people in wheelchairs shall be located no higher than 48 in (1220 mm) above the finished floor. Lockers intended for use by handicapped people shall be equipped with latches and latch handles that comply with 4.27. Unobstructed aisle space in front of lockers used by handicapped people shall be a minimum of 42 in (1065 mm) clear width.*

9.6 *Attendance-Recording Equipment.* *Time clocks, card racks, log books, and other work assignment or attendance-recording equipment used by people in wheelchairs must be installed at a height no more than 48 in (1220 mm) above the finished floor. Counter space at check-in areas must be no more than 36 in (915 mm) above the finished floor.*

Appendix

APPENDIX

This appendix contains additional information that should help the designer to understand the minimum requirements of the standard or to design buildings or facilities for greater accessibility. The paragraph numbers correspond to the sections or paragraphs of the standard to which the material relates and are therefore not consecutive (for example, A4.2.1 contains additional information relevant to 4.2.1). Sections for which additional material appears in this appendix have been indicated by an asterisk.

A4.2 Space Allowances and Reach Ranges.

A4.2.1 Wheelchair Passage Width.

(1) Space Requirements for Wheelchairs. Most wheelchair users need a 30 in (760 mm) clear opening width for doorways, gates, and the like, when the latter are entered head-on. If the wheelchair user is unfamiliar with a building, if competing traffic is heavy, if sudden or frequent movements are needed, or if the wheelchair must be turned at an opening, then greater clear widths are needed. For most situations, the addition of an inch of leeway on either side is sufficient. Thus, a minimum clear width of 32 in (815 mm) will provide adequate clearance. However, when an opening or a restriction in a passageway is more than 24 in (610 mm) long, it is essentially a passageway and must be at least 36 in (915 mm) wide.

(2) Space Requirements for Use of Walking Aids. Although people who use walking aids can maneuver through clear width openings of 32 in (815 mm), they need 36 in (915 mm) wide passageways and walks for comfortable gaits. Crutch tips, often extending down at a wide angle, are a hazard in narrow passageways where they might not be seen by other pedestrians. Thus, the 36 in (915 mm) width provides a safety allowance both for the disabled person and for others.

(3) Space Requirements for Passing. Able-bodied people in winter clothing, walking straight ahead with arms swinging, need 32 in (815 mm) of width, which includes 2 in (50 mm) on either side for sway, and another 1 in (25 mm) tolerance on either side for clearing nearby objects or other pedestrians. Almost all wheelchair users and those who use walking aids can also manage within this 32 in (815 mm) width for short distances. Thus, two streams of traffic can pass in 64 in (1625 mm) in a comfortable flow. Sixty inches (1525 mm) provide a minimum width for a somewhat more restricted flow. If the clear width is less than 60 in (1525 mm), two wheelchair users will not be able to pass but will have to seek a wider place for passing. Forty-eight inches (1220 mm) is the minimum width needed for an ambulatory person to pass a nonambulatory or semiambulatory person. Within this 48 in (1220 mm) width, the ambulatory person will have to twist to pass a wheelchair user, a person with a seeing eye dog, or a semiambulatory person. There will be little leeway for swaying or missteps (see Fig. A1).

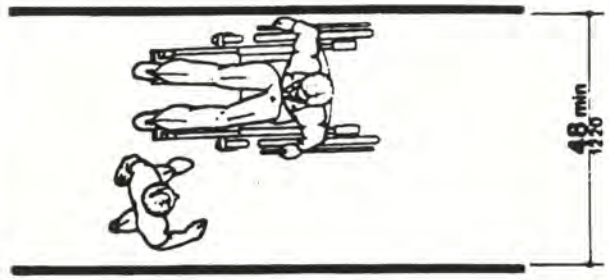

Fig. A1
Minimum Passage Width for One Wheelchair and One Ambulatory Person

A4.2.3 Wheelchair Turning Space. This standard specifies a minimum space of 60 in (1525 mm) diameter for a pivoting 180-degree turn of a wheelchair. This space is usually satisfactory for turning around, but many people will not be able to turn without repeated tries and bumping into surrounding objects. The space shown in Fig. A2 will allow most wheelchair users to complete U-turns without difficulty.

A4.2.4 Clear Floor or Ground Space for Wheelchairs. The wheelchair and user shown in Fig. A3 represent typical dimensions for a large adult male. The space requirements in this standard are based upon maneuvering clearances that will accommodate most larger wheelchairs. Fig. A3 provides a uniform reference for design not covered by this standard.

A4.2.5 & A4.2.6 Reach. *Reach ranges for persons seated in wheelchairs may be further clarified by Fig. A3(a). These drawings approximate in the plan view information shown in Fig. 4, 5, and 6 in other views.*

A4.3 Accessible Route.

A4.3.1 General.

(1) Travel Distances. Many disabled people can move at only very slow speeds; for many, traveling 200 ft (61 m) could take about 2 minutes. This assumes a rate of about 1.5 ft/s (455 mm/s) on level ground. It also assumes that the traveler would move continuously. However, on trips over 100 ft (30 m), disabled people are apt to rest frequently, which substantially increases their trip times. Resting periods of 2 minutes for every 100 ft (30 m) can be used to estimate travel times for people with severely limited stamina. In

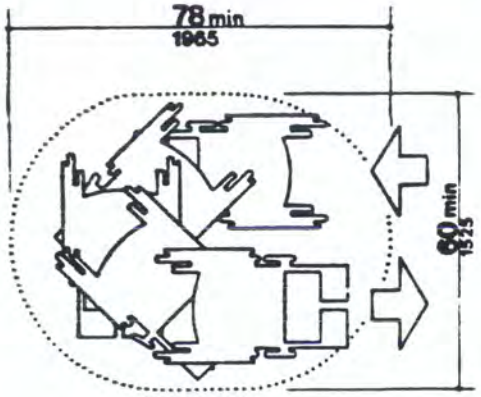

Fig. A2
Space Needed for Smooth U-Turn in a Wheelchair

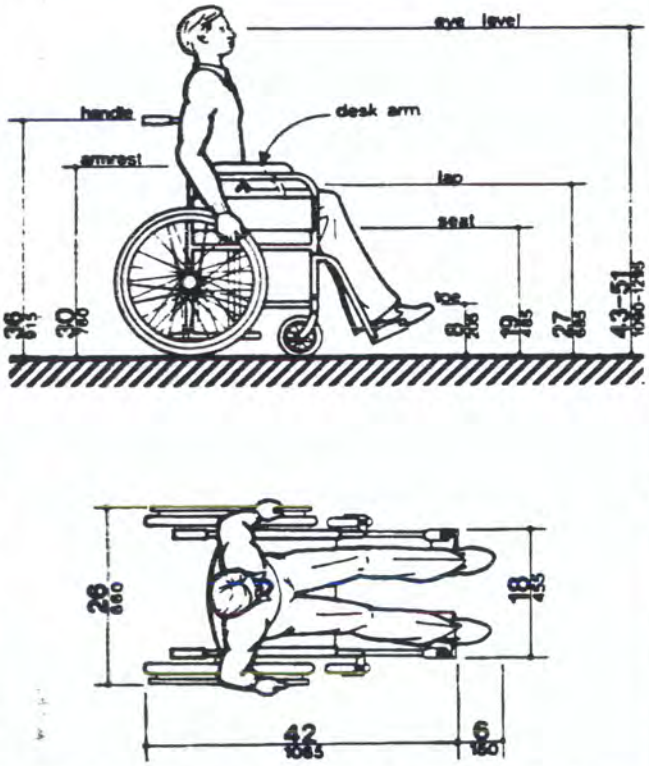

NOTE: Footrests may extend further for very large people.

Fig. A3
Dimensions of Adult-Sized Wheelchairs

inclement weather, slow progress and resting can greatly increase a disabled person's exposure to the elements.

(2) Sites. Level, indirect routes or those with running slopes lower than 1:20 can sometimes provide more convenience than direct routes with maximum allowable slopes or with ramps.

A4.3.10 Egress. In buildings where physically handicapped people are regularly employed or are residents, an emergency management plan for their evacuation also plays an essential role in fire safety.

A4.4 Protruding Objects.

A4.4.1 General. Guide dogs are trained to recognize and avoid hazards. However, most people with severe impairments of vision use the long cane as an aid to mobility. The two principal cane techniques are the touch technique, where the cane arcs from side to side and touches points outside both shoulders; and the diagonal technique, where the cane is held in a stationary position diagonally across the body with the cane tip touching or just above the

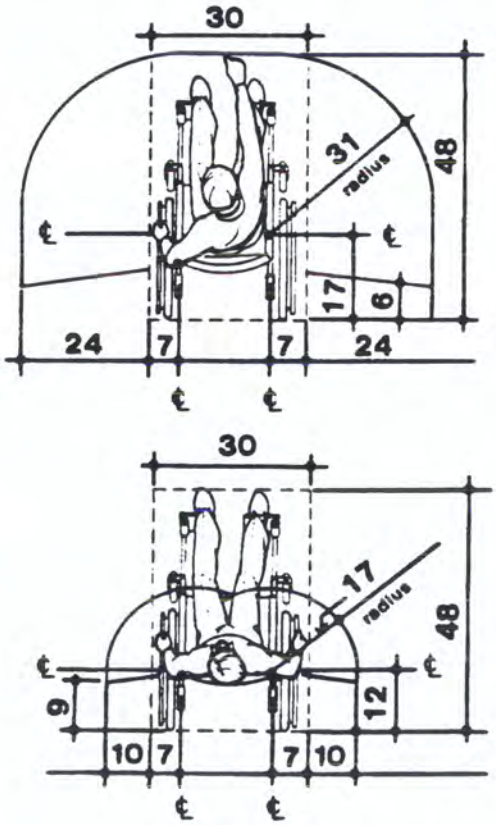

Fig. A3 (a)

A4.4 Protruding Objects

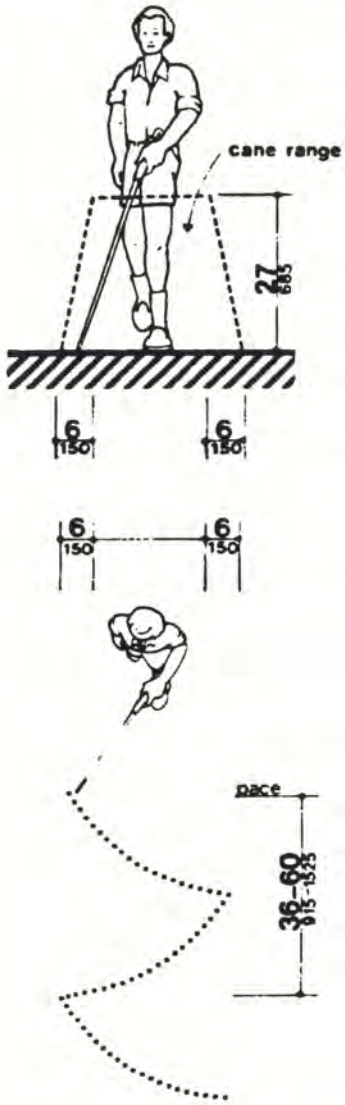

Fig. A4
Cane Technique

ground at a point outside one shoulder and the handle or grip extending to a point outside the other shoulder. The touch technique is used primarily in uncontrolled areas, while the diagonal technique is used primarily in certain limited, controlled, and familiar environments. Cane users are often trained to use both techniques.

Potential hazardous objects are noticed only if they fall within the detection range of canes (see Fig. A4). Visually impaired people walking toward an object can detect an overhang if its lowest surface is not higher than 27 in (685 mm). When walking alongside projecting objects, they cannot detect overhangs. Since proper cane and guide dog techniques keep people away from the edge of a path or from walks, a slight overhang of no more than 4 in (100 mm) is not hazardous.

A4.5 Ground and Floor Surfaces.

A4.5.1 General. Ambulant and semiambulant people who have difficulty maintaining balance and those with restricted gaits are particularly sensitive to slipping and tripping hazards. For such people, a stable and regular surface is necessary for safe walking, particularly on stairs. Wheelchairs can be propelled most easily on surfaces that are hard, stable, and regular. Soft, loose surfaces such as shag carpet, loose sand, and wet clay, and irregular surfaces, such as cobblestones, can significantly impede wheelchair movement.

Slip resistance is based on the frictional force necessary to keep a shoe heel or crutch tip from slipping on a walking surface under the conditions of use likely to be found on the surface. Although it is known that the static coefficient of friction is the basis of slip resistance, there is not as yet a generally accepted method to evaluate the slip resistance of walking surfaces.

Cross slopes on walks and ground or floor surfaces can cause considerable difficulty in propelling a wheelchair in a straight line.

A4.5.3 Carpet. Much more needs to be done in developing both quantitative and qualitative criteria for carpeting. However, certain functional characteristics are well established. When both carpet and padding are used, it is desirable to have minimum movement (preferably none) between the floor and the pad and the pad and the carpet, which would allow the carpet to hump or warp. In heavily trafficked areas, a thick, soft (plush) pad or cushion, particularly in combination with long carpet pile, makes it difficult for individuals in wheelchairs and those with other ambulatory disabilities to get about. This should not preclude their use in specific areas where traffic is light. Firm carpeting can be achieved through proper selection and combination of pad and carpet, sometimes with the elimination of the pad or cushion, and with proper installation.

A4.6 Parking and Passenger Loading Zones.

A4.6.3 Parking Spaces. High-top vans, which disabled people or transportation services often use, require higher clearances in parking garages than automobiles. *When optional van spaces are provided within a garage, only the spaces themselves and a vehicle route to them require the specified clearances.*

A4.6.4 Signage. Signs designating parking places for disabled people can be seen from a driver's seat if the signs are mounted high enough above the ground and located at the front of a parking space.

A4.8 Ramps.

A4.8.1 General. Ramps are essential for wheelchair users if elevators or lifts are not available to connect different levels. However, some people who use walking aids have difficulty with ramps and prefer stairs.

A4.8.2 Slope and Rise. The ability to manage an incline is related to both its slope and its length. Wheelchair users with disabilities affecting arms or with low stamina have serious difficulty using inclines. Most ambulatory people and most people who use wheelchairs can manage a slope of 1:16. Many people cannot manage a slope of 1:12 for 30 ft (9 m). Many people who have difficulty negotiating very long ramps at relatively shallow slopes can manage very short ramps at steeper slopes.

A4.8.5 Handrails. The requirements for stair and ramp handrails in this standard are for adults. When children are principal users in a building or facility, a second set of handrails at an appropriate height can assist them and aid in preventing accidents.

A4.10 Elevators.

A4.10.6 Door Protective and Reopening Device. The required door reopening device would hold the door open for 20 seconds if the doorway remains unobstructed. After 20 seconds, the door may begin to close. However, if designed in accordance with ANSI A17.1-1978, the door closing movement could still be stopped if a person or object exerts sufficient force at any point on the door edge.

A4.10.7 Door and Signal Timing for Hall Calls. This paragraph allows variation in the location of call buttons, advance time for warning signals, and the door-holding period used to meet the time requirement.

A4.10.12 Car Controls. Industry-wide standardization of elevator control panel design would make all elevators significantly more convenient for use by people with severe visual impairments.

In many cases, it will be possible to locate the highest control on elevator panels within 48 in (1220 mm) from the floor.

A4.10.13 Car Position Indicators. A special button may be provided that would activate the audible signal within the given elevator only for the desired trip, rather than maintaining the audible signal in constant operation.

A4.10.14 Emergency Communications. A device that requires no handset is easier to use by people who have difficulty reaching.

A4.11 Platform Lifts.

Platform lifts include porch lifts and other devices used for short-distance, vertical transportation of people in wheelchairs. At the present time, generally recognized safety standards for such lifts have not been developed. Care should be taken in selecting and installing lifts to ensure that they are free from hazards to users or to other individuals who may be in the vicinity where they are being operated.

A4.13 Doors.

A4.13.8 Thresholds at Doorways. Thresholds and surface height changes in doorways are particularly inconvenient for wheelchair users who also have low stamina or restrictions in arm movement, because complex maneuvering is required to get over the level change while operating the door.

A4.13.9 Door Hardware. Some disabled persons must push against a door with their chair or walker to open it. Applied kickplates on doors with closers can reduce required maintenance by withstanding abuse from wheelchairs and canes. To be effective, they should cover the door width, less approximately 2 in (51 mm), up to a height of 16 in (405 mm) from its bottom edge and be centered across the top.

A4.13.10 Door Closers. Closers with delayed action features give a person more time to maneuver through doorways. They are particularly useful on frequently used interior doors such as entrances to toilet rooms.

A4.13.11 Door Opening Force. Although most people with disabilities can exert at least 5 lbf (22.2N), both pushing and pulling from a stationary position, a few people with severe disabilities cannot exert even 3 lbf (13.3N). Although some people cannot manage the allowable forces in this standard and many others have difficulty, door closers must have certain minimum closing forces to close doors satisfactorily. Forces for pushing or pulling doors open are measured with a push-pull scale under the following conditions:

(1) Hinged doors: Force applied perpendicular to the door at the door opener or 30 in (760 mm) from the hinged side, whichever is farther from the hinge.

(2) Sliding or folding doors: Force applied parallel to the door at the door pull or latch.

(3) Application of force: Apply force gradually so that the applied force does not exceed the resistance of the door.

In high-rise buildings, air-pressure differentials may require a modification of this specification in order to meet the functional intent.

A4.13.12 Automatic Doors and Power-Assisted Doors. Sliding automatic doors do not need guard rails and are more convenient for wheelchair users and visually impaired people to use. If slowly opening automatic doors can be reactuated before their closing cycle is completed, they will be more convenient in busy doorways.

A4.15 Drinking Fountains and Water Coolers

A4.15 *Drinking Fountains and Water Coolers.*

A4.15.2 *Drinking fountains with two spouts can assist both handicapped people and those people who find it difficult to bend over.*

A4.16 Water Closets.

A4.16.3 Height. Preferences for toilet seat heights vary considerably among disabled people. Higher seat heights may be an advantage to some ambulatory disabled people but a disadvantage for wheelchair users and others. Toilet seats 18 in (455 mm) high seem to be a reasonable compromise. Thick seats and filler rings are available to adapt standard fixtures to these requirements.

A4.16.4 Grab Bars. Fig. A5(a) and (b) show the diagonal and side approaches most commonly used to transfer from a wheelchair to a water closet. Some wheelchair users can transfer from the front of the toilet, while others use a 90-degree approach. Most people who use the two additional approaches can also use either the diagonal approach or the side approach.

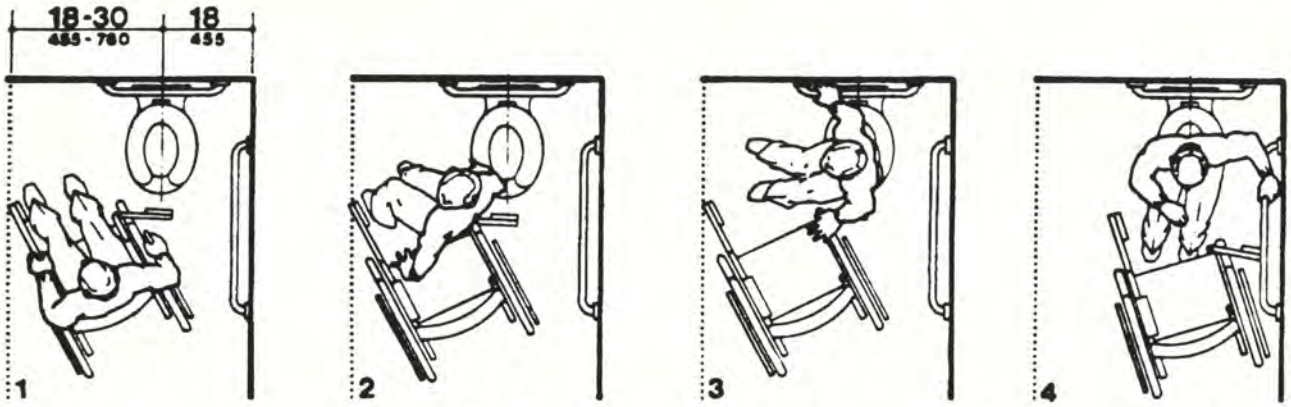

1. Takes transfer position, swings footrest out of the way, sets brakes.
2. Removes armrest, transfers.
3. Moves wheelchair out of the way, changes position (some people fold chair or pivot it 90° to the toilet).
4. Positions on toilet, releases brake.

(a)
Diagonal Approach

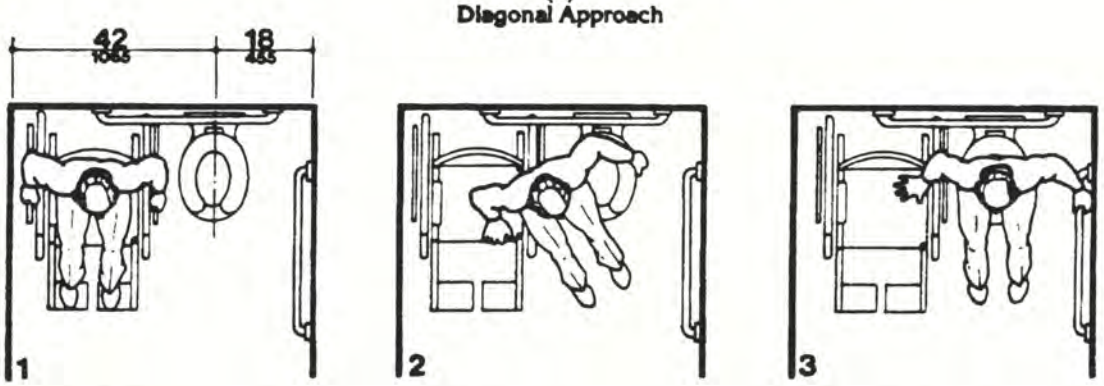

1. Takes transfer position, removes armrest, sets brakes.
2. Transfers.
3. Positions on toilet.

(b)
Side Approach

Fig. A5
Wheelchair Transfers

A4.16.5 Flush Controls. Flush valves and related plumbing can be located behind walls or to the side of the toilet, or a toilet seat lid can be provided if plumbing fittings are directly behind the toilet seat. Such designs reduce the chance of injury and imbalance caused by leaning back against the fittings. Flush controls for tank-type toilets have a standardized mounting location on the left side of the tank (facing the tank). Tanks can be obtained by special order with controls mounted on the right side. If administrative authorities require flush controls for flush valves to be located in a position that conflicts with the location of the rear grab bar then that bar may be split or shifted toward the wide side of the toilet area.

A4.17 Toilet Stalls.

A4.17.5 Doors. To make it easier for wheelchair users to close toilet stall doors, doors can be provided with closers, spring hinges, or a pull bar mounted on the inside surface of the door near the hinge side.

A4.19 Lavatories and Mirrors.

A4.19.6 Mirrors. If mirrors are to be used by both ambulatory people and wheelchair users, then they must be at least 74 in (1880 mm) high at their topmost edge. A single full length mirror can accommodate all people, including children.

A4.21 Shower Stalls.

A4.21.1 General. Shower stalls that are 36 in by 36 in (915 mm by 915 mm) wide provide additional safety to people who have difficulty maintaining balance because all grab bars and walls are within easy reach. Seated people use the walls of 36 in by 36 in (915 mm by 915 mm) showers for back support. Shower stalls that are 60 in (1525 mm) wide and have no curb may increase usability of a bathroom by wheelchair users because the shower area provides additional maneuvering space.

A4.23 Bathrooms, Bathing Facilities, and Shower Rooms.

A4.23.9 Medicine Cabinets. Other alternatives for storing medical and personal care items are very useful to disabled people. Shelves, drawers, and floor-mounted cabinets can be provided within the reach ranges of disabled people.

A4.26 Handrails, Grab Bars, and Tub and Shower Seats.

A4.26.1 General. Many disabled people rely heavily upon grab bars and handrails to maintain balance and prevent serious falls. Many people brace their forearms between supports and walls to give them more leverage and stability in maintaining balance or for lifting. The maximum grab bar clearance of 1-1/2 in (38 mm) required in this standard is a safety clearance to prevent injuries from arms slipping through the opening. It also provides adequate gripping room.

A4.26.2 Size and Spacing of Grab Bars and Handrails. This specification allows for alternate shapes of handrails as long as they allow an opposing grip similar to that provided by a circular section of 1-1/4 in to 1-1/2 in (32 mm to 38 mm).

A4.27 *Controls and Operating Mechanisms.*

A4.27.3 Height. *Fig. A6 further illustrates mandatory and advisory control mounting height provisions for typical equipment. Note distinction between built-in equipment (considered real property) and movable equipment (considered chattel, and not covered by the Architectural Barriers Act of 1968).*

A4.28 Alarms.

A4.28.2 Audible Alarms. Audible emergency signals must have an intensity and frequency that can attract the attention of individuals who have partial hearing loss. People over 60 years of age generally have difficulty perceiving frequencies higher than 10,000 Hz.

A4.28.3 Visual Alarms. The specifications in this section do not preclude the use of zoned or coded alarm systems. In zoned systems, the emergency exit lights in an area will flash whenever an audible signal rings in the area.

A4.28.4 Auxiliary Alarms. Locating visual emergency alarms in rooms where deaf individuals may work or reside alone can ensure that they will always be warned when an emergency alarm is activated. To be effective, such devices must be located and oriented so that they will spread signals and reflections throughout a space or raise the overall light level sharply. The amount and type of light necessary to wake a deaf person from a sound sleep in a dark room will vary depending on a number of factors, including the size and configuration of the room, the distance between the source and the person, whether or not the light flashes, and the cycle of flashing. A 150-watt flashing bulb can be effective under some conditions. Certain devices currently available are designed specifically as visual alarms for deaf people. Deaf people may not need accessibility features other than the emergency alarm connections and communications devices. Thus, rooms in addition to those accessible for wheelchair users also should be equipped with emergency visual alarms or connections.

A4.29 Tactile Warnings.

A4.29.2 Tactile Warnings on Walking Surfaces. *(Reserved).*

A4.29.3 Tactile Warnings on Doors to Hazardous Areas. Tactile signals for hand reception are useful if it is certain that the signals will be touched.

A4.29.5 Tactile Warnings at Hazardous Vehicular Areas. *(Reserved).*

4.29 Tactile Warnings

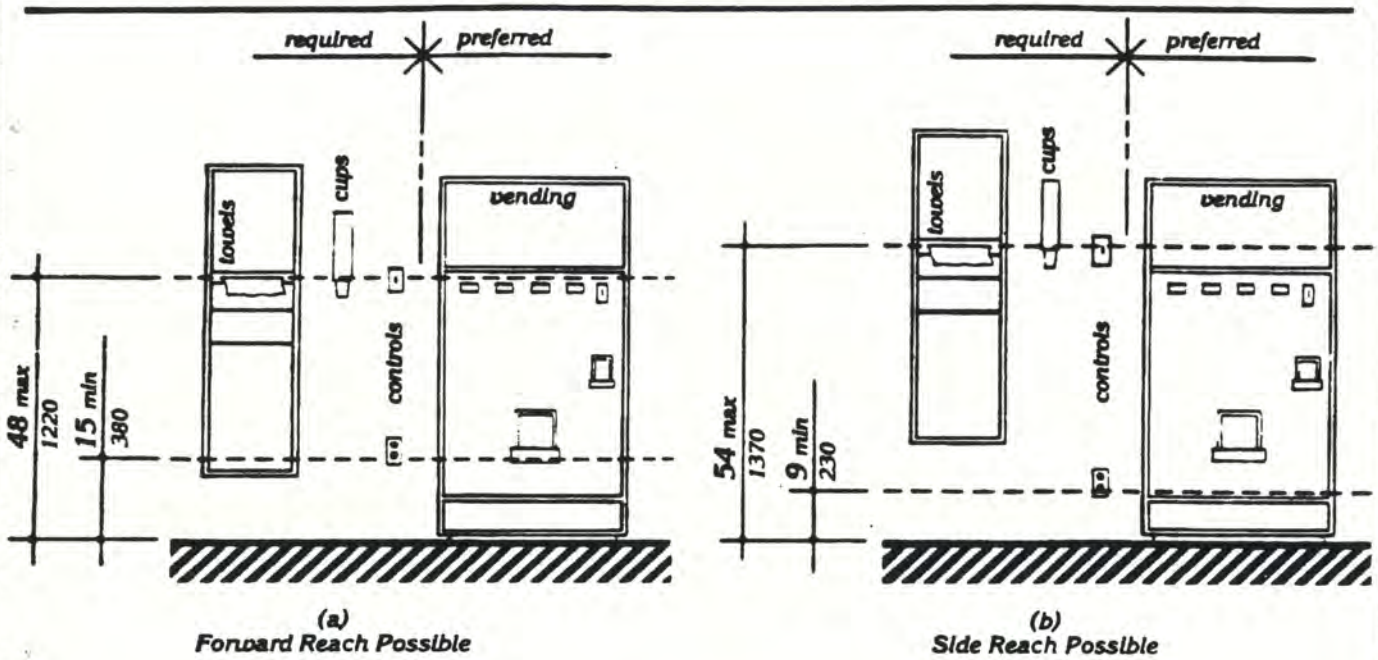

Fig. A6
Control Reach Limitations

A4.29.6 Tactile Warnings at Reflecting Pools. *(Reserved).*

A4.29.7 Standardization. Too many tactile warnings or lack of standardization weakens their usefulness. Tactile signals can also be visual signals to guide dogs, since dogs can be trained to respond to a large variety of visual cues.

A4.30 Signage.

A4.30.1 General. In building complexes where finding locations independently on a routine basis may be a necessity (for example, college campuses), tactile maps or prerecorded instructions can be very helpful to visually impaired people. Several maps and auditory instructions have been developed and tested for specific applications. The type of map or instructions used must be based on the information to be communicated, which depends highly on the type of buildings or users.

Landmarks that can easily be distinguished by visually impaired individuals are useful as orientation cues. Such cues include changes in illumination level, bright colors, unique patterns, wall murals, location of special equipment, or other architectural features (for example, an exterior view).

Many people with disabilities have limitations in movement of their head and reduced peripheral vision. Thus, signage positioned perpendicular to the path of travel is easiest for them to notice. People can generally distinguish signage within an angle of 30 degrees to either side of the centerline of their face without moving their head.

A4.30.2 Character Proportion. The legibility of printed characters is a function of the viewing distance, character height, the ratio of the stroke width to the height of the character, the contrast of color between character and background, and print font. The size of characters must be based upon the intended viewing distance. A severely nearsighted person may have to be much closer to see a character of a given size accurately than a person with normal visual acuity.

A4.30.3 Color Contrast. The greatest readability is usually achieved through the use of light-colored characters or symbols on a dark background.

A4.30.4 Raised or Indented Characters or Symbols. Signs with descriptive materials about public buildings, monuments, and objects of cultural interest can be raised or incised letters. However, a sighted guide or audio-tape device is often a more effective way to present such information. Raised characters are easier to feel at small sizes and are not susceptible to maintenance problems as are indented characters, which can fill with dirt, cleaning compounds, and the like.

Braille characters can be used in addition to standard alphabet characters and numbers. Placing braille

characters to the left of standard characters makes them more convenient to read. Standard dot sizing and spacing as used in braille publications are acceptable. Raised borders around raised characters can make them confusing to read unless the border is set far away from the characters.

A4.31 Telephones.

A4.31.3 Mounting Height. In localities where the dial-tone first system is in operation, calls can be placed at a coin telephone through the operator without inserting coins. The operator button is located at a height of 46 in (1170 mm) if the coin slot of the telephone is at 54 in (1370 mm).

A generally available public telephone with a coin slot mounted lower on the equipment would allow universal installation of telephones at a height of 48 in (1220 mm) or less to all operable parts.

A4.31.5 Equipment for Hearing Impaired People. Other aids for people with hearing impairments are telephones, teleprinter, and other telephonic devices that can be used to transmit printed messages through telephone lines to a teletype printer or television monitor.

A4.32 Seating, Tables, and Work Surfaces.

A4.32.4 Height of Work Surfaces. Different types of work require different work surface heights for comfort and optimal performance. Light detailed work such as writing requires a work surface close to elbow height for a standing person. Heavy manual work such as rolling dough requires a work surface height about 10 in (255 mm) below elbow height for a standing person. The principle of a high work surface height for light detailed work and a low work surface for heavy manual work also applies for seated persons; however, the limiting condition for seated manual work is clearance under the work surface.

Table A1 shows convenient work surface heights for seated persons. The great variety of heights for comfort and optimal performance indicates a need for alternatives or a compromise in height if people who stand and people who sit will be using the same counter area.

A4.33 Assembly Areas.

A4.33.2 Size of Wheelchair Locations. Spaces large enough for two wheelchairs allow people who are coming to a performance together to sit together.

A4.33.3 Placement of Wheelchair Locations. The location of wheelchair areas can be planned so that a variety of positions within the seating area are provided. This will allow choice in viewing and price categories.

A4.33.6 Placement of Listening Systems. A distance of 50 ft (15 m) allows a person to distinguish performers' facial expressions.

Table A1
Convenient Heights of Work Surfaces for Seated People*

Conditions of Use	Short Women in	Short Women mm	Tall Men in	Tall Men mm
Seated in a wheelchair:				
Manual work:				
Desk or removable armrests	26	660	30	760
Fixed, full-size armrests†	32‡	815	32‡	815
Light, detailed work:				
Desk or removable armrests	29	735	34	865
Fixed, full-size armrests†	32‡	815	34	865
Seated in a 16-in (405-mm) -high chair:				
Manual work	26	660	27	685
Light, detailed work	28	710	31	785

*All dimensions are based on a work-surface thickness of 1-1/2 in (38 mm) and a clearance of 1-1/2 in (38 mm) between legs and the underside of a work surface.

†This type of wheelchair arm does not interfere with the positioning of a wheelchair under a work surface.

‡This dimension is limited by the height of the armrests: a lower height would be preferable. Some people in this group prefer lower work surfaces, which require positioning the wheelchair back from the edge of the counter.

A4.33.7 Types of Listening Systems. A listening system that can be used from any seat in a seating area is the most flexible way to meet this specification. Earphone jacks with variable volume controls can benefit only people who have slight hearing losses and do not help people with hearing aids. At the present time, audio loops are the most feasible type of listening system for people who use hearing aids, but people without hearing aids or those with hearing aids not equipped with inductive pickups cannot use them. Loops can be portable and moved to various locations within a room. Moreover, for little cost, they can serve a large area within a seating area. Radio frequency systems can be extremely effective and inexpensive. People without hearing aids can use them, but people with hearing aids need custom-designed equipment to use them as they are presently designed. If hearing aids had a jack to allow a by-pass of microphones, then radio frequency systems would be suitable for people with and without hearing aids. Some listening systems may be subject to interference from other equipment and feedback from hearing aids of people who are using the systems. Such interference can be controlled by careful engineering design that anticipates feedback and sources of interference in the surrounding area.

A4.34 Dwelling Units

A4.34 Dwelling Units.

A4.34.2 Minimum Requirements. Handicapped people who live in accessible dwelling units of multi-family buildings or housing projects will want to participate in all on-site social activities, including visiting neighbors in their dwelling units. Hence, any circulation paths among all dwelling units and among all on-site facilities should be as accessible as possible. An accessible second exit to dwelling units provides an extra margin of safety in a fire.

A4.34.5 Bathrooms. Although not required by these specifications, it is important to install grab bars at toilets, bathtubs, and showers if it is known that a dwelling unit will be occupied by elderly or severely disabled people.

A4.34.6 Kitchens.

A4.34.6.1 Clearance. The minimum clearances provide satisfactory maneuvering spaces for wheelchairs only if cabinets are removed at the sink.

A4.34.6.5 Sink. Installing a sink with a drain at the rear so that plumbing is as close to the wall as possible can provide additional clear knee space for wheelchair users.

A4.34.6.6 Ranges and Cooktops. Although not required for minimum accessibility, countertop range units in a counter with adjustable heights can be an added convenience for wheelchair users.

A4.34.6.7 Ovens. Countertop or wall-mounted ovens with side-opening doors are easier for people in wheelchairs to use. Clear spaces at least 30 in (760 mm) wide under counters at the side of ovens are an added convenience. The pullout board or fixed shelf under side-opening oven doors provides a resting place for heavy items being moved from the oven to a counter.

A4.34.6.8 Refrigerator/Freezers. Side-by-side refrigerator/freezers provide the most usable freezer compartments. Locating refrigerators so that their doors can swing back 180 degrees is more convenient for wheelchair users.

A4.34.6.10 Kitchen Storage. Full height cabinets or tall cabinets can be provided rather than cabinets mounted over work counters. Additional storage space located conveniently adjacent to kitchens can be provided to make up for space lost when cabinets under counters are removed.

A9. Postal Facilities.

A9.2 *Post Office Lobbies.* *Furniture as chattel is not covered under the Architectural Barriers Act of 1968, but the requirements for lobby furniture and equipment are imposed by the United States Postal Service for greater accessibility in its customer lobbies.*

Note: Unedited copies of the American National Standards Institute standard, A117.1-1980, "Specifications for Making Buildings and Facilities Accessible to and Usable by Physically Handicapped People," are available from the American National Standards Institute, Inc., 1430 Broadway, New York, New York 10018.

THE ARCHITECTURAL BARRIERS ACT (Public Law 90-480) of August 12, 1968

AS AMENDED THROUGH 1984

42 U.S.C. §§4151 *et seq.*

An Act to insure that certain buildings financed with Federal funds are so designed and constructed as to be accessible to the physically handicapped.

Be it enacted by the Senate and House of Representatives of the United States of America in Congress assembled, That, as used in this Act, the term "building" means any building or facility (other than (A) a privately owned residential structure not leased by the Government for subsidized housing programs and (B) any building or facility on a military installation designed and constructed primarily for use by able bodied military personnel) the intended use for which either will require that such building or facility be accessible to the public, or may result in employment or residence therein of physically handicapped persons, which building or facility is —

(1) to be constructed or altered by or on behalf of the United States;

(2) to be leased in whole or in part by the United States after August 12, 1968;*

(3) to be financed in whole or in part by a grant or a loan made by the United States after August 12, 1968, if such building or facility is subject to standards for design, construction, or alteration issued under authority of the law authorizing such grant or loan; or

(4) to be constructed under authority of the National Capital Transportation Act of 1960, the National Capital Transportation Act of 1965, or title III of the Washington Metropolitan Area Transit Regulation Compact.

Sec. 2 The Administrator of General Services, in consultation with the Secretary of Health and Human Services, shall prescribe standards for the design, construction, and alteration of buildings (other than residential structures subject to this Act and buildings, structures, and facilities of the Department of Defense and of the United States Postal Service subject to this Act) to insure whenever possible that physically handicapped persons will have ready access to, and use of, such buildings.

**A 1976 amendment, Public Law 94-541, deleted the following words from the end of section 2: "after construction or alteration in accordance with plans and specifications of the United States." Section 202 of Public Law 94-541 states that the amendment applies to "every lease entered into on or after January 1, 1977, including any renewal of a lease entered into before such a date which renewal is on or after such date." Regulations at 43 Fed. Reg. 16478 (April 19, 1978) amending 41 C.F.R. §101-19.6.*

Sec. 3 The Secretary of Housing and Urban Development, in consultation with the Secretary of Health and Human Services, shall prescribe standards for the design, construction, and alteration of buildings which are residential structures subject to this Act to insure whenever possible that physically handicapped persons will have ready access to, and use of, such buildings.

Sec. 4 The Secretary of Defense, in consultation with the Secretary of Health and Human Services, shall prescribe standards for the design, construction, and alteration of buildings, structures, and facilities of the Department of Defense subject to this Act to insure whenever possible that physically handicapped persons will have ready access to, and use of, such buildings.

Sec. 4a The United States Postal Service, in consultation with the Secretary of Health and Human Services, shall prescribe such standards for the design, construction, and alteration of its buildings to insure whenever possible that physically handicapped persons will have ready access to, and use of, such buildings.

Sec. 5 Every building designed, constructed, or altered after the effective date of a standard issued under this Act which is applicable to such building, shall be designed, constructed, or altered in accordance with such standard.

Sec. 6 The Administrator of General Services, with respect to standards issued under section 2 of this Act, and the Secretary of Housing and Urban Development, with respect to standards issued under section 3 of this Act, and the Secretary of Defense, with respect to standards issued under section 4 of this Act, and the United States Postal Service, with respect to standards issued under section 4a of this Act —

(1) is authorized to modify or waive any such standard, on a case-by-case basis, upon application made by the head of the department, agency, or instrumentality of the United States concerned, and upon a determination by the Administrator or Secretary, as the case may be, that such modification or waiver is clearly necessary, and

(2) shall establish a system of continuing surveys and investigations to insure compliance with such standards.

Sec. 7(a) The Administrator of General Services shall report to Congress during the first week of January of each year on his activities and those of other departments, agencies, and instrumentalities of the Federal Government under this Act during the preceding fiscal year including, but not limited to, standards issued, revised, amended, or repealed under this Act and all case-by-case modifications, and waivers of such standards during such year.

(b) The Architectural and Transportation Barriers Compliance Board established by section 502 of the Rehabilitation Act of 1973 (Public Law 93-112) shall report to the Public Works and Transportation Committee of the House of Representatives and the Public Works Committee of the Senate during the first week of January of each year on its activities and actions to insure compliance with the standards prescribed under this Act.

INDEX

ACCESS AISLES

Definition of 3.5
Parking & Passenger Loading Zones 4.6.3, 4.6.5
Restaurants & Cafeterias 5.1

ACCESS TO PERFORMING ARTS (See PERFORMING AREAS)

ACCESSIBLE ROUTE (See also ACCESS AISLE; CIRCULATION PATH/ROUTE) **4.3, A4.3***

Assembly Area 4.33.3, 4.33.5
Bathrooms, Bathing Facilities & Shower Rooms 4.23.1
Curb Ramps 4.7.1, 4.7.2
Definition of 3.5
Doors 4.13.2
Dwelling Units: Bathrooms 4.34.5
Dwelling Units: Laundry Facilities 4.34.7.1
Dwelling Units: Kitchens 4.34.6
Dwelling Units: Minimum Requirements 4.34.2, (3), (15), 4.34.5, 4.34.6, 4.34.7
Elevators 4.10.1
Entrances 4.14.1
Ground & Floor Surfaces 4.5.1
Head Room 4.3.5
Historic Preservation: Applicability ..... 4.1.7(1)(b)
Lavatories & Mirrors 4.19.3
Minimum Number: Additions ..... 4.1.5(2)
Minimum Number: Alterations ..... 4.1.6(3),(a), (4)(f)(i), (ii)
Minimum Number: Historic Preservation ..... 4.1.7, (2)(a),(c),(d)
Minimum Number: Housing ..... 4.1.3(3)
Minimum Number: New Construction ..... 4.1.2(1),(3),(7)(c),(9),(10),(12)
Minimum Number: Sites & Exterior Facilities ..... 4.1.1(1),(2),(4)
Parking & Passenger Loading Zones 4.6.2, 4.6.3
Protruding Objects 4.4.1, 4.4.2
Ramps 4.8.1
Restaurants & Cafeterias 5.1
Sinks 4.24.5
Space Allowances & Reach Ranges 4.2.4.2
Stairs 4.9.2
Toilet Rooms 4.22.1, 4.22.3, 4.22.7
Toilet Stalls 4.17.1
Urinals 4.18.3

ADAPTABILITY (See also DWELLING UNITS; KITCHENS)

Adaptable Features: Consumer Information 4.34.4
Adaptability 4.34.3
Definition of 3.5
Occupancy Classification: Military Housing ..... 4.1.4(3)

ADAPTABLE BATHROOMS (See DWELLING UNITS)*

ADAPTABLE KITCHENS (See KITCHENS)

ADDITIONS

Definition of 3.5
Minimum Number: Additions 4.1.5

ADMINISTRATIVE AUTHORITY/AUTHORITIES

Accessible Route: Areas of Refuge 4.3.10
Definition of 3.5
Fire Door Opening Force ..... 4.13.11(1)
Location of Flush Controls A4.16.5
Platform Lifts: Safety Regulations 4.11.2
Toilet Stalls: Plumbing Code Requirements 4.17.3
Use of Residential or Enclosed Wheelchair Lifts 4.10.1

ALARMS **4.28, A4.28**

Audible Alarms ..... 4.1.2(13), 4.28.2, 4.28.3, A4.28.2

*Bold denotes major sections of Uniform Federal Accessibility Standards

ALARMS (CONTINUED)

Audible Signal (See ELEVATORS)
Auxiliary Alarms 4.28.4
Alarms in Dwelling Units (See DWELLING UNITS)
Emergency Alarms (See EMERGENCY WARNING SYSTEMS)
Minimum Number: Alterations ..... 4.1.6(3)(d)(iv)
Visual Alarms ..... 4.1.2(13), 4.28.3, A4.28.3

ALTERATIONS

Definition of 3.5
Historic Preservation: Applicability ..... 4.1.7(1)(a)
Minimum Number: Alterations 4.1.6
Toilet Stalls: Exceptions 4.17.3

ASSEMBLY AREAS (See also CONFERENCE ROOMS; MEETING ROOMS; SEATING, TABLES & WORK SURFACES; PERFORMING AREAS) **4.33, A4.33**

Access to Performing Areas (See PERFORMING AREAS)
Balconies 4.33.3
Definition of 3.5
Egress (See EGRESS)
Fixed Seating Plan 4.33.3
Minimum Number: Alterations ..... 4.1.6(3)(d)(vii), (4)(f)
Minimum Number: New Construction ..... 4.1.2(18)
Occupancy Classification: Assembly ..... 4.1.4(4)
Occupancy Classification: Military Exclusions ..... 4.1.4(2)(c)
Placement of Listening Systems (See LISTENING SYSTEMS)
Placement of Wheelchair Seating Areas 4.33.3, A4.33.3
Size of Wheelchair Locations 4.33.2, A4.33.2
Surfaces (See GROUND & FLOOR SURFACES)
Types of Listening Systems (See LISTENING SYSTEMS)

ASSEMBLY OCCUPANCY ..... 4.1.4(4)

AUDIO-AMPLIFICATION SYSTEMS (See also LISTENING SYSTEMS)

Auditory Instructions A4.30.1, A4.30.4
Minimum Number: New Construction ..... 4.1.2(18)(b)
Types of Listening Systems (See LISTENING SYSTEMS)

AUTOMATIC DOORS (See DOORS)

BALCONIES (See ASSEMBLY AREAS; DWELLING UNITS)

BATHROOMS, BATHING FACILITIES & SHOWER ROOMS (See also BATHTUBS) **4.23**

Bathing & Shower Facilities: Minimum Number 4.23.8
Bathrooms in Dwelling Units (See DWELLING UNITS)
Clear Floor Space 4.23.3
Controls & Dispensers (See CONTROLS & OPERATING MECHANISMS)
Doors (See DOORS)
Lavatories & Mirrors: Minimum Number 4.23.6
Medicine Cabinets: Minimum Number 4.23.9, A4.23.9
Medicine Cabinets in Dwelling Units (See DWELLING UNITS)
Minimum Number: Additions ..... 4.1.5(3)
Minimum Number: Alterations ..... 4.1.6(3)(c)
Minimum Number: New Construction ..... 4.1.2(10)
Minimum Number: New Construction/Bathing Facilities ..... 4.1.1(6), (7)(d)
Urinals: Minimum Number 4.23.5
Water Closets: Minimum Number 4.23.4

BATHTUBS (See also BATHROOMS, BATHING FACILITIES & SHOWER ROOMS; SHOWER STALLS) **4.20**

Bathtub Enclosures 4.20.7
Bathtub Enclosures in Dwelling Units (See DWELLING UNITS)
Clear Floor Space 4.23.3
Controls (See CONTROLS & OPERATING MECHANISMS)
Grab Bars (See HANDRAILS, GRAB BARS & TUB & SHOWER SEATS)
In-tub Seats 4.20.3, 4.20.7, 4.26.3
Shower Unit (See SHOWER SPRAY UNITS)

BEDROOMS (See DWELLING UNITS; HEALTH CARE)

Business Occupancy

BUSINESS OCCUPANCY ..... 4.1.4(5)

CABINETS

Cabinets for Kitchens (See KITCHENS)
Medicine Cabinets (See BATHROOMS, BATHING FACILITIES & SHOWER ROOMS)
Occupancy Classification: Factory Industrial ..... 4.1.4(7)
Storage Cabinets (See STORAGE)

CAFETERIAS (See RESTAURANTS & CAFETERIAS)

CARD CATALOGS (See LIBRARIES)

CARPET (See also GROUND & FLOOR SURFACES)

Occupany Classification: Factory Industrial ..... 4.1.4(7)
Carpet & Carpet Tile 4.5.3, A4.5.3

CARPET TILE (See CARPET)

CARPORTS (See DWELLING UNITS)

CHANGES IN LEVELS (See also ELEVATORS; STAIRS; PLATFORM LIFTS)

Accessible Route 4.3.8
Ground & Floor Surfaces 4.5.2
Thresholds at Doorways 4.13.8, A4.13.8

CHARACTER PROPORTION (See SIGNAGE)

CHECK-OUT AISLES (See MERCANTILE)

CHILD CARE FACILITIES

Occupancy Classification: Institutional ..... 4.1.4(9)

CIRCULATION PATH/ROUTE (See also ACCESS AISLE; ACCESSIBLE ROUTE)

Definition of 3.5
Dwelling Units A4.34.2
Head Room 4.4.2
Location of Parking & Passenger Loading Zones 4.6.2
Minimum Number: New Construction ..... 4.1.2(2)
Minimum Number: Sites & Exterior Facilities ..... 4.1.1(3)
Parking Spaces (See PARKING & PASSENGER LOADING ZONES)
Post Office Lobbies ..... 9.2(1)

CLEAR FLOOR SPACE FOR WHEELCHAIRS (See CLEARANCES FOR WHEELCHAIRS)

CLEAR KNEE SPACE (See KNEE & TOE CLEARANCE)

CLEAR WIDTH (See CLEARANCES FOR WHEELCHAIRS)

CLEARANCES FOR WHEELCHAIRS (See also GROUND & FLOOR SURFACES; REACH RANGES)

Clear Floor Space for Wheelchair 4.2.4, A4.2.4
Maneuvering Clearances 4.2.4.2, 4.10.9, 4.13.6, 9.2
Minimum Clear Width 4.2.4.1
Obstructed Turning Space 4.3.3
Passing Space 4.3.4
Passing Width 4.2.1, A4.2.1
Turning Space 4.2.3, A4.2.3
Unobstructed Aisle Space 9.5
Unobstructed Turning Space 4.2.3, 4.22.3, 4.23.3
Width for Wheelchair Passing 4.2.2

CLOTHES DRYERS (See DWELLING UNITS)

CLOTHES RODS (See STORAGE)

COLOR CONTRAST (See SIGNAGE)

COMMON AREAS/SPACES (See COMMON USE)

COMMON USE (See also STREETS & SIDEWALKS)

Common Areas/Spaces ..... 4.1.4(3), 4.1.5(4), 4.1.6(1)(a), 4.34.2(1)
Definition of 3.5
Laundry Facilities (See DWELLING UNITS)
Minimum Number: Housing ..... 4.1.3(1)(b)
Minimum Number: New Construction ..... 4.1.2(10)

COMMON USE (CONTINUED)

Minimum Number: Sites & Exterior Facilities ..... 4.1.1(6)
Occupancy Classification: Institutional ..... 4.1.4(9)(a), (b), (c)
Occupancy Classification: Residential ..... 4.1.4(11)(a)
Parking Spaces 4.6.3

COMMUNICATION SYSTEMS (See EMERGENCY COMMUNICATION SYSTEMS; SIGNAGE)

CONFERENCE ROOMS

Definition of (See Assembly Areas) 3.5
Minimum Number: New Construction ..... 4.1.2(18)(b)

CONSUMER INFORMATION (See DWELLING UNITS)

CONTROLS & DISPENSERS (See CONTROLS & OPERATING MECHANISMS; DISPENSERS)

CONTROLS & OPERATING MECHANISMS **4.27, A4.27**

Bathrooms, Bathing Facilities & Shower Rooms: Controls & Dispensers 4.23.7
Bathtub Controls in Dwelling Units ..... 4.34.5.4(4)
Clear Floor Space at Controls & Dispensers 4.27.2
Definition of (See Operable Part) 3.5
Door Hardware 4.13.9, A4.13.9
Drinking Fountains & Water Coolers: Controls 4.15.4
Elevator Emergency Communication Controls 4.10.14
Highest Operable Part of Controls & Dispensers 4.27.3, A4.27.3
Kitchen Controls 4.34.6.3
Laundry Controls 4.34.7.3
Lavatory Faucets (See FAUCETS)
Minimum Number: New Construction ..... 4.1.2(12)
Minimum Requirements: Housing ..... 4.34.2(9)
Operable Equipment 4.27.2, 4.27.3
Operation of Controls & Operating Mechanisms 4.27.4
Oven Controls 4.34.6.6, 4.34.7
Postal Facilities Switches & Controls 9.1
Shower Controls in Dwelling Units ..... 4.34.5.5(4)
Shower Stall Controls 4.21.5
Sink Faucets (See FAUCETS)
Storage Hardware 4.25.4
Telephone Controls (See TELEPHONES)
Toilet Room Controls & Dispensers 4.16.6, 4.22.7
Urinal Flush Controls 4.18.4
Water Closet Flush Controls 4.16.5, A4.16.5
Water Closet Dispensers in Dwelling Units ..... 4.34.5.2(4)

COOKTOPS (See KITCHENS)

CORRECTIONAL FACILITIES ..... 4.1.4(9)(c)

CROSS SLOPES (See RAMPS)

CURB RAMPS (See also RAMPS) **4.7**

Built-up Curb Ramps 4.7.6
Changes in Levels Along Accessible Routes 4.3.8
Curbs 4.6.5, 4.7.1, 4.7.5, 4.7.10, 4.8.7
Diagonal Curb Ramps 4.7.10
Definition of 3.5
Islands (Traffic) 4.7.11
Location 4.7.1
Location of Marked Crossings 4.7.9
Minimum Number: Alterations ..... 4.1.6(1)(b), (4)(a)
Obstructions by Parked Vehicles 4.7.8
Passenger Loading Zones 4.6.5
Sides of Curb Ramps 4.7.5
Slopes & Rises 4.8.2
Surfaces (See GROUND & FLOOR SURFACES)
Uncurbed Intersections 4.7.12
Width 4.7.3

CURBS (See CURB RAMPS)

DETENTION FACILITIES (See CORRECTIONAL FACILITIES)

Dining Areas

DINING AREAS (See DWELLING UNITS)

DIRECTIONAL SIGNS (See SIGNAGE)

DISHWASHERS (See KITCHENS)

DISPENSERS (See CONTROLS & OPERATING MECHANISMS)

DISPLAYS

Historic Preservation: Applicability ..... 4.1.7(1)(b)
Libraries 8.4
Minimum Number: Historic Preservation ..... 4.1.7(2)(e)
Occupancy Classification: Mercantile ..... 4.1.4(10)
Restaurants & Cafeterias 5.3

DOOR & SIGNAL TIMING FOR HALL CALLS (See ELEVATORS)

DOOR CLOSERS (See ELEVATORS; DOORS)

DOOR DELAY FOR CAR CALLS (See ELEVATORS)

DOOR HARDWARE (See CONTROLS & OPERATING MECHANISMS)

DOOR PROTECTIVE & REOPENING DEVICES (See ELEVATORS)

DOORS (See also ELEVATORS; ENTRANCES) **4.13, A4.13**

Accessible Route: Doors 4.3.9
Automatic Doors & Power-Assisted Doors 4.13.12, A4.13.12
Bathrooms, Bathing Facilities & Shower Rooms: Doors 4.23.2
Clear Opening Width at Doorways 4.13.5, A4.2.1
Definition of (See Automatic Door, Entrance, Power-Assisted Door) 3.5
Door Closers 4.13.10, A4.13.10
Door Opening Force 4.13.11, A4.13.11
Doors to Hazardous Areas (See TACTILE WARNINGS)
Doors to Patients' Bedrooms ..... 6.3(5)
Double-leaf Doorways 4.13.4
Dwelling Units: Doors ..... 4.34.5.1, 4.34.5.2(6)
Entry Doors to Acute Care Hospital Rooms 4.13.6
Exterior Hinged Doors ..... 4.13.11(2)(a)
Exterior Sliding Doors 4.13.8
Fire Doors ..... 4.13.11(1)
Gates 4.13.3
Hardware (See CONTROLS & OPERATING MECHANISMS)
Hinged Doors ..... 4.13.11(2)(a),(b), A4.13.11(1)
Interior Hinged Doors ..... 4.13.11(2)(b)
Maneuvering Clearances at Doors ..... 4.8.4(4), 4.13.6
Minimum Number: Alterations ..... 4.1.6(4)(d)
Minimum Number: New Construction ..... 4.1.2(7)
Revolving Doors & Turnstiles 4.13.2, 8.3
Sliding Doors ..... A4.13.11(2)
Thresholds at Doorways 4.13.8, A4.13.8
Toilet Room Doors 4.22.2
Toilet Stall Doors 4.17.5, A4.17.5
Two Doors in Series 4.13.7

DRESSING ROOMS (See PERFORMING AREAS)

DRINKING FOUNTAINS & WATER COOLERS **4.15, A4.15**

Clearances 4.15.5
Controls (See CONTROLS & OPERATING MECHANISMS)
Knee Clearance (See KNEE & TOE CLEARANCE)
Minimum Number: Alterations ..... 4.1.6(3)(d)(ii)
Minimum Number: New Construction ..... 4.1.2(9)
Postal Facilities 9.1
Spout Height 4.15.2, A4.15.2
Spout Location 4.15.3

DWELLING UNITS (See also EGRESS; ENTRANCES; FIXTURES; REACH RANGES; SEATING, TABLES & WORK SURFACES; WATER CLOSETS) **4.34, A4.34**

Accessible Route ..... 4.3.2(3), (4)
Adaptable Bathrooms 4.34.5, A4.34.5

DWELLING UNITS (CONTINUED)

Adaptability 4.34.3
Alarms ..... 4.34.2(10), 4.34.4(3)
Balconies ..... 4.34.2(15)(d)
Base Cabinets (See KITCHENS)
Bathrooms ..... 4.34.2(12), 4.34.4(2), 4.34.5, A4.34.5
Bathtubs ..... 4.34.2(12), 4.34.4(2), 4.34.5.4, 4.34.6, A4.34.5
Bathtub Enclosures 4.34.5.6
Bathtub Seats ..... 4.34.5.4(2)
Bathtub & Shower Faucets (See FAUCETS)
Bedrooms ..... 4.34.2(15)(c)
Cabinets: Minimum Requirements ..... 4.34.2(8)
Carports ..... 4.1.4(13), 4.34.2(15)(d)
Clothes Dryers 4.34.7.2
Common Spaces & Facilities ..... 4.34.2(1)
Consumer Information 4.34.4
Controls (See CONTROLS & OPERATING MECHANISMS)
Definition of (See also Housing, Multi-family Dwelling) 3.5
Dining Areas ..... 4.34.2(15)(b)
Doors (See DOORS)
Emergency Warning Systems (See EMERGENCY WARNING SYSTEMS)
Entrances ..... 4.34.2(3), (6), (7)
Exits A4.34.2
Faucets (See FAUCETS)
Fixed or Hand-held Shower Units (See SHOWER SPRAY UNITS)
Garages (See GARAGES)
Grab Bars (See HANDRAILS, GRAB BARS & TUB & SHOWER SEATS)
Height of Water Closets ..... 4.34.5.2(2)
In-Tub Seats ..... 4.34.5.4(2)
Kitchens (See KITCHENS)
Laundry Facilities ..... 4.34.2(14), 4.34.6.2, 4.34.7, 4.34.7.1, 4.34.7.2, 4.34.7.3
Lavatories (See LAVATORIES & MIRRORS)
Living Rooms ..... 4.34.2(15)(a)
Medicine Cabinets 4.34.5.3
Minimum Number: Housing 4.1.3
Minimum Number: Sites & Exterior Facilities ..... 4.1.1(5)(d)(1),(2)
Mirrors (See LAVATORIES & MIRRORS)
Occupancy Classification: Residential ..... 4.1.4(11)(b), (c)
Parking (See PARKING & PASSENGER LOADING ZONES)
Patios ..... 4.34.2(15)(d)
Showers ..... 4.34.2(12), 4.34.4(2),4.34.5
Shower Enclosures 4.34.5.6
Shower Stalls ..... 4.34.2(12), 4.34.4(2), 4.34.5.5, 4.34.5.6, A4.34.5
Shower Seats ..... 4.34.5.5(2)
Sinks (See SINKS)
Sink Knee Clearance (See KNEE & TOE CLEARANCE)
Sleeping Areas ..... 4.34.2(15)(c)
Spaces ..... 4.34.2(2)
Storage ..... 4.34.2(8)
Structural Reinforcement ..... 4.34.5.2(3), 4.34.5.4(3),4.34.5.5(3)
Terraces ..... 4.34.2(15)(d)
Water Closets 4.34.5.2
Washing Machines 4.34.7.2

EDUCATIONAL OCCUPANCY

Occupancy Classification: Business ..... 4.1.4(5)
Occupancy Classification: Educational ..... 4.1.4(6)

EGRESS (See also ENTRANCES; EXITS)

Accessible Route: Egress 4.3.10
Assembly Areas: Placement of Wheelchairs 4.33.3
Definition of 3.5
Fire Safety A4.3.10
Mercantile: Security Bollards 7.4
Minimum Number: Alterations ..... 4.1.6(4)(f)(i)
Minimum Number: Dwelling Units ..... 4.1.3(2)
Minimum Number: New Construction ..... 4.1.2(7)(d)

Elements & Spaces

ELEMENTS & SPACES (See Specific Element and/or Specific Space)

Accessible Elements & Spaces: Scope & Technical Requirements ..... 4.
Definition of (See Accessible Element, Element, Functional Spaces, Space) 3.5

ELEVATORS (See also CLEARANCES FOR WHEELCHAIRS; SIGNAGE; TACTILE WARNINGS) **4.10, A4.10**

Accessible Routes: Changes in Levels 4.3.8
Audible Signal 4.10.4, 4.10.7, 4.10.13, A4.10.13
Automatic Doors 4.10.6, A4.10.6
Automatic Operation 4.10.2
Car Controls 4.10.11, 4.10.12, A4.10.12
Car Position Indicators 4.10.13, A4.10.13
Control Buttons 4.10.12, A4.10.12
Control Panels 4.10.12, A4.10.12
Door Closers 4.10.6, A4.10.6
Door Delay for Car Calls 4.10.8
Door Protective & Reopening Devices ..... 4.1.6(4)(c)(i), 4.10.6, A4.10.6
Door & Signal Timing for Hall Calls 4.10.7, A4.10.7
Elevator Penthouses ..... 4.1.2(5), 4.1.4(1)
Emergency Alarms (See EMERGENCY WARNING SYSTEMS)
Emergency Communications (See EMERGENCY COMMUNICATION SYSTEMS)
Emergency Communication Controls (See CONTROLS & OPERATING MECHANISMS)
Emergency Controls ..... 4.10.12(3)
Floor Plan of Elevator Cars 4.10.9
Freight Elevators 4.10.1
Hall Call Buttons ..... 4.10.3, 4.10.4(3), 4.10.7, A4.10.7
Hall Lanterns 4.10.4
Hoistway Entrances 4.10.4, 4.10.5
Illumination Levels 4.10.11
Intercommunication Systems (See EMERGENCY COMMUNICATION SYSTEMS)
Location of Car Controls ..... 4.10.12(4)
Minimum Number: Housing ..... 4.1.3(1)
Minimum Number: Alterations ..... 4.1.6(1)(b), (d), (4)(c)
Minimum Number: New Construction ..... 4.1.2(4),(5)
Occupancy Classification: General Exceptions ..... 4.1.4(1)
Raised Characters on Hoistway Entrances 4.10.5
Recessed Characters 4.10.14
Surfaces (See GROUND & FLOOR SURFACES)
Tactile Control Indicators ..... 4.10.12(2)
Visible Signal ..... 4.10.3, 4.10.4,(3), 4.10.12(2), 4.10.13
Visual Control Indicators ..... 4.10.12(2), 4.10.13

EMERGENCY COMMUNICATION SYSTEMS (See also EMERGENCY WARNING SYSTEMS)

Elevator Communication Systems 4.10.14, A4.10.14
Intercommunication Systems 4.10.14

EMERGENCY CONTROLS (See ELEVATORS)

EMERGENCY WARNING SYSTEMS (See also EMERGENCY COMMUNICATION SYSTEMS)

Audible Alarms (See ALARMS)
Auxiliary Alarms (See ALARMS)
Emergency Alarms ..... 4.10.12(3), 4.28.3, A4.28.3
Minimum Number: New Construction ..... 4.1.2(13)
Minimum Requirements: Dwelling Units ..... 4.34.2(10)
Postal Facilities: Emergency Signal 9.1
Tactile Warnings on Doors to Hazardous Areas (See TACTILE WARNINGS)
Visual Alarms (See ALARMS)

EMPLOYEE PARKING (See PARKING & PASSENGER LOADING ZONES)

ENTRANCES **4.14**

Accessible Route: Location ..... 4.3.2(1), (3), (4)
Definition of 3.5
Door Hardware (See CONTROLS & OPERATING MECHANISMS)
Entrances in Dwelling Units (See DWELLING UNITS)
Health Care Entrances ..... 6.2, 6.3(1)
Historic Preservation: Applicability ..... 4.1.7(1)(b)
Minimum Number: Accessible Housing ..... 4.1.3(2)
Minimum Number: Additions ..... 4.1.5(1), (2)

ENTRANCES (CONTINUED)

Minimum Number: Alterations ..... 4.1.6(3)(b)
Minimum Number: Historic Preservation ..... 4.1.7(2)(a), (b), (d)
Minimum Number: New Construction ..... 4.1.2(1), (7)(a), (8)
Minimum Number: Sites & Exterior Facilities ..... 4.1.1(1), (7)(c)
Occupancy Classification: Military Housing ..... 4.1.4(3)
Parking & Passenger Loading Zones (See PARKING & PASSENGER LOADING ZONES)
Revolving Doors & Turnstiles (See DOORS)
Service Entrances 3.5, 4.14.2

EQUIPMENT CATWALKS

Minimum Number: New Construction ..... 4.1.2(5)
Occupancy Classification: General Exceptions ..... 4.1.4(1)

EQUIPMENT FOR HEARING IMPAIRED (See HEARING IMPAIRED)

ESSENTIAL FEATURES

Definition of 3.5
Minimum Number: Alterations ..... 4.1.6(1)(a)

EXCEPTIONS

Assembly Areas: Placement of Wheelchair Locations 4.33.3
Bathrooms, Bathing Facilities & Shower Rooms: Clear Floor Space 4.23.3
Dwelling Units: Doors ..... 4.34.2(6)
Dwelling Units: Kitchen Clearances 4.34.6.1
Highest Operable Part of Controls 4.27.3
Minimum Number: Accessible Housing: Entrances ..... 4.1.3(2)
Minimum Number: Additions: Elements & Spaces ..... 4.1.5(4)
Minimum Number: Alterations: Mechanical Rooms ..... 4.1.6(g)
Minimum Number: Alterations: Structurally Impracticable ..... 4.1.6(2), (3), (d)
Minimum Number: Alterations: Toilet Rooms ..... 4.1.6(4)(e)
Minimum Number: Alterations: Vertical Access ..... 4.1.6(1)(b)
Minimum Number: Historic Preservation: Entrances ..... 4.1.7(2)(b)
Minimum Number: Historic Preservation: Slope of Ramps ..... 4.1.7(2)(a)
Minimum Number: New Construction: Egress ..... 4.1.2(7)
Minimum Number: New Construction: Elevators ..... 4.1.2(5)
Minimum Number: New Construction: Temporary Information ..... 4.1.2(15)
Minimum Number: New Construction: Telephone: Reach Range ..... 4.1.2(16)
Minimum Number: Sites & Exterior Facilities: Parking Spaces ..... 4.1.1(5)(a)
Minimum Number: Sites & Exterior Facilities: Toilet Facilities ..... 4.1.1(6)
Occupancy Classification: General Exceptions ..... 4.1.4(1)
Parking Spaces 4.6.3
Shower Stalls: Shower Stall Unit 4.21.6
Toilet Rooms: Clear Floor Space 4.22.3
Toilet Stalls 4.17.3
Visual Alarms ..... 4.28.3(1), (2)

EXITS (See also EGRESS)

Dwelling Units: Exits (See DWELLING UNITS)
Minimum Number: New Construction ..... 4.1.2(8)
Doors to Hazardous Areas (See TACTILE WARNINGS)

EXTERIOR (See also SITES & EXTERIOR FACILITIES)

Accessible Route: Location ..... 4.3.2(4)
Definition of (See Accessible Route, Circulation Path, Common Use, Public Use, Walk) 3.5
Finding Locations of Buildings A4.30.1
Historic Preservation: Applicability ..... 4.1.7(1)(b)

EXTERIOR HINGED OR SLIDING DOORS (See DOORS)

EXTRAORDINARY REPAIR

Definition of 3.5

FACILITY (See also Specific Occupancy Classification)

Definition of 3.5

FACTORY INDUSTRIAL OCCUPANCY

Occupancy Classifiction: Factory Industrial ..... 4.1.4(7)
Service Entrances (See ENTRANCES)

FAUCETS (See also BATHROOMS, BATHING FACILITIES & SHOWER ROOMS)

Bathtubs 4.20.5
Bathtubs in Dwelling Units ..... 4.34.5.4(4)
Lavatories & Mirrors 4.19.5
Shower Stalls 4.21.5
Showers in Dwelling Units ..... 4.34.5.5(4)
Sinks 4.24.7
Sinks in Dwelling Units (See SINKS)

FIRE DOORS (See DOORS)

FIXED OR BUILT-IN SEATING

Assembly Areas: Placement of Wheelchair Locations 4.33.3
Assembly Areas: Placement of Listening Systems 4.33.6
Library Seating & Tables 8.2
Minimum Number: New Construction ..... 4.1.2(17)
Restaurants & Cafeterias 5.1
Telephones: Clear Floor or Ground Space 4.31.2

FIXTURES

Clear Floor Space 4.22.3, 4.23.3, 4.34.5.1
Hall Lantern Fixtures (See ELEVATORS)
Lavatories & Mirrors (See LAVATORIES & MIRRORS)

FLOOR SURFACES (See GROUND & FLOOR SURFACES)

FLUSH CONTROLS (See CONTROLS)

FOOD SERVICE LINES (See RESTAURANTS & CAFETERIAS)

FORWARD APPROACH (See REACH RANGES)

FREE STANDING OBJECTS

Drinking Fountains & Water Coolers ..... 4.15.5(2)
Protruding Objects 4.4.1

FREEZERS (See KITCHENS)

FULL & FAIR CASH VALUE

Definition of 3.5
Minimum Number: Alterations ..... 4.1.6(3)(d)

FUNCTIONAL SPACE

Definition of 3.5

GATES

Accessible Gates 4.13.3
Check-out Areas (See LIBRARIES)
Revolving Doors & Turnstiles (See DOORS)
Wheelchair Passage Width ..... A4.2.1(1)

GARAGES (See also PARKING & PASSENGER LOADING ZONES)

Service Entrances (See ENTRANCES)
Dwelling Units: Minimum Requirements ..... 4.34.2(15)(d)
Occupancy Classification: Utility & Miscellaneous ..... 4.1.4(13)
Parking Spaces in Garages A4.6.3

GRAB BARS (See HANDRAILS, GRAB BARS & TUB & SHOWER SEATS)

GRATINGS (See GROUND & FLOOR SURFACES)

GRIPPING SURFACES (See HANDRAILS, GRAB BARS & TUB & SHOWER SEATS)

GROUND & FLOOR SURFACES **4.5, A4.5**

Accessible Route: Surface Textures 4.3.6
Assembly Areas: Surfaces 4.33.4
Carpet (See CARPET)
Changes in Levels 4.5.2
Clear Floor or Ground Space for Wheelchairs 4.2.4.3
Curb Ramp Surfaces 4.7.4
Dwelling Units: Minimum Requirements ..... 4.34.2(2)

GROUND & FLOOR SURFACES (CONTINUED)

Elevators: Floor Surfaces 4.10.10
Gratings 4.5.4
Minimum Number: New Construction ..... 4.1.2(3)
Minimum Number: Sites & Exterior Facilities ..... 4.1.1(4)
Outdoor Ramp Conditions 4.8.8
Outdoor Stairs Conditions 4.9.6
Street & Sidewalk Surfaces 4.5.1, 4.5.4

HALL CALL BUTTONS & LANTERNS (See ELEVATORS)

HAND-HELD SHOWER UNITS (See SHOWER SPRAY UNITS)

HANDRAILS, GRAB BARS & TUB & SHOWER SEATS **4.26, A4.26**

Adaptable Bathrooms ..... 4.34.3, 4.34.4(2), 4.34.5, 4.34.5.2(3), 4.34.5.4(3), 4.34.5.5(3), A4.34.5
Bathtub Grab Bars & Seats 4.20.3, 4.20.4
Bathtubs in Dwelling Units: Seats & Grab Bars ..... 4.34.5.4(2), (3)
Eliminating Hazards 4.26.4
Gripping Surfaces ..... 4.8.5(4), 4.9.4(4), (5), 4.17.6, 4.26.2
Handrails at Ramps 4.8.5, A4.8.5
Handrails for Stairs 4.9.4, A4.8.5
Minimum Number: Alterations ..... 4.1.6(4)(b)
Minimum Number: Dwelling Units ..... 4.34.2(12), 4.34.5, 4.34.5.2(3), 4.34.5.4, 4.34.5.5
Minimum Number: Grab Bars 4.16.1, 4.16.4, 4.17.1, 4.17.6, 4.20.1, 4.20.4, 4.21.1, 4.21.4
Minimum Number: Handrails 4.8.1, 4.8.5, 4.9.1, 4.9.4
Minimum Number: Shower Seats 4.20.1, 4.20.3, 4.21.1, 4.21.3
Post Office Lobby Handrails ..... 9.2(2)
Shower Stalls: Seats & Grab Bars 4.21.3, 4.21.4
Showers in Dwelling Units ..... 4.34.5.5(2), (3)
Size & Spacing of Grab Bars & Handrails 4.26.2, A4.26.2
Structural Strength 4.26.3
Toilet Stalls: Grab Bars 4.17.6
Water Closet Grab Bars 4.16.4, A4.16.4
Water Closets in Dwelling Units: Grab Bars ..... 4.34.5.2(3)

HARDWARE (See CONTROLS & OPERATING MECHANISMS)

HAZARDOUS AREAS (See TACTILE WARNINGS)

HAZARDOUS VEHICULAR AREAS (See TACTILE WARNINGS)

HAZARDOUS OCCUPANCY

Occupancy Classification: Factory Industrial ..... 4.1.4(7)
Occupancy Classification: Hazardous ..... 4.1.4(8)
Occupancy Classification: Storage ..... 4.1.4(12)

HEAD ROOM

Accessible Route 4.3.5
Protruding Objects 4.4.2

HEALTH CARE ..... **6.**

Doors to Patient Bedrooms (See DOORS)
Entrances (See ENTRANCES)
Entry Doors to Acute Care Hospital Rooms (See DOORS)
Hospitals ..... 4.1.4(9)(b), 4.13.6
Long-term Care Facilities ..... 4.1.4(9)
Minimum Number: New Construction ..... 4.1.2(13)
Minimum Number: Sites & Exterior Facilities ..... 4.1.1(5)(e)
Occupancy Classification: Business ..... 4.1.4(5)
Occupancy Classification: Institutional ..... 4.1.4(9), (a), (b)
Outpatient Facilities ..... 4.1.1(5)(e), 4.1.4(5), (9)(b)
Patient Bedrooms 6.3
Patient Toilet Rooms 6.4

HEARING IMPAIRED

Auxiliary Alarms (See ALARMS)
Dwelling Unit: Consumer Information ..... 4.34.4(3), (4)
Equipment for Hearing Impaired ..... 4.28.2, 4.28.3, 4.28.4, 4.31.5, 4.34.4(3), (4), A4.31.5
Listening Systems (See LISTENING SYSTEMS)
Minimum Number: New Construction ..... 4.1.2(16)(b), (18)(b)

HEARING IMPAIRED (CONTINUED)

Telephones 4.31.5, A4.31.5
Visual Alarms (See ALARMS)

HINGED DOOR (See DOORS)

HISTORIC PRESERVATION **4.17**

HOSPITALS (See HEALTH CARE)

HOUSING (See also DWELLING UNITS)

Definition of 3.5
Minimum Number: Additions (Reserved) ..... 4.1.5(5)
Minimum Number: Housing 4.1.3
Minimum Number: Sites & Exterior Facilities ..... 4.1.1(5)(d)
Occupancy Classification: Military Exclusions ..... 4.1.4(2)(a)
Occupancy Classification: Military Housing ..... 4.1.4(3)
Occupancy Classification: Residential ..... 4.1.4(11)

ILLUMINATION LEVELS (See ELEVATORS; SIGNAGE)

INCISED & INDENTED CHARACTERS (See SIGNAGE)

INSTITUTIONAL OCCUPANCY

Occupancy Classification: Institutional ..... 4.1.4(9)
Occupancy Classification: Residental ..... 4.1.4(11)

INTERCOMMUNICATION SYSTEMS (See EMERGENCY COMMUNICATION SYSTEMS)

INTERNATIONAL SYMBOL OF ACCESSIBILITY

Minimum Number: Sites & Exterior Facilities ..... 4.1.1(7)
Parking & Passenger Loading Zones: Signage (See PARKING & PASSENGER LOADING ZONES)
Symbol of Accessibility 4.30.5

INTERSECTIONS (See CURB RAMPS)

INTERIOR HINGED DOORS (See DOORS)

INTERIOR SIGNAGE MOUNTING HEIGHT & LOCATIONS (See SIGNAGE)

JAILS (See CORRECTIONAL FACILITIES)

KITCHENS (See also DWELLING UNITS) **4.34.6, A4.34.6**

Adaptable Features: Consumer Information ..... 4.34.4(1), (3), (4)
Base Cabinets ..... 4.34.4(1),(3),(4), 4.34.6.1, 4.34.6.4(2), 4.34.6.10(2), A4.34.6.5(5), A4.34.6.10
Cabinets ..... 4.34.2(8), 4.34.4(1),(3),(4), 4.34.6.10
Clear Floor Space 4.34.6.2
Clearance 4.34.6.1, A4.34.6.1
Controls (See CONTROLS & OPERATING MECHANISMS)
Counter Work Surfaces 4.34.6.4
Dishwashers 4.34.6.2, 4.34.6.9
Height of Work Surfaces ..... 4.34.4(1), (4), 4.34.6.4, (1)
Kitchen Storage 4.34.6.10, (1), (2), A4.34.6.10
Minimum Requirements ..... 4.34.2(13), 4.34.6
Ovens 4.34.6.6, 4.34.6.7, A4.34.6.7
Ranges/Cooktops 4.34.6.2, 4.34.6.6, A4.34.6.6
Refrigerator/Freezers ..... 4.34.6.2, 4.34.6.8, (1),(2), A4.34.6.8
Sinks (See SINKS)

KITCHEN STORAGE (See KITCHENS)

KNEE & TOE CLEARANCES

Clear Knee Space 4.2.4.1, 4.15.5, (1)
Drinking Fountains: Knee Clearance ..... 4.15.5(1)
Lavatories & Mirrors 4.19.2
Seating, Tables & Work Surfaces 4.32.2, 4.32.3
Sinks: Knee Clearance 4.24.3
Sinks: Knee Clearance in Dwelling Units ..... 4.34.6.5(7), A4.34.6.5
Toilet Stalls: Toe Clearance 4.17.4

KNURLING (See TACTILE WARNINGS)

LANDINGS (See RAMPS)

LAUNDRY FACILITIES (See DWELLING UNITS)

LAVATORIES & MIRRORS **4.19, A4.19**

Adaptability: Consumer Information ..... 4.34.4(1)
Built-in Lavatories 4.19.1
Bathrooms, Bathing Facilities & Shower Rooms: Clear Floor Space 4.23.3
Clear Floor Space 4.19.3
Dwelling Units: Lavatory, Mirrors & Medicine Cabinets 4.34.5.3
Exposed Pipes & Surfaces 4.19.4
Faucets (See FAUCETS)
Height & Clearances 4.19.2
Knee & Toe Clearances (See KNEE & TOE CLEARANCES)
Lavatory Fixtures 4.19.5, 4.22.3, 4.23.3
Lavatory Height 4.19.2
Lavatory Vanities 4.19.1
Minimum Number: Alterations ..... 4.1.6(4)(e)
Minimum Number: Lavatories & Mirrors 4.19.1, 4.22.6, 4.23.6
Minimum Requirements: Dwelling Units ..... 4.34.2(12)
Mirrors ..... 4.1.4(12), 4.19.6, A4.19.6
Toilet Rooms 4.22.6

LIBRARIES ..... **8.**

Card Catalogs 8.4
Check-out Areas 8.3
Minimum Number 8.1, 8.2
Public Toilet Rooms (See TOILET ROOMS)
Occupancy Classification: Assembly ..... 4.1.4(4)
Reading & Study Areas 8.1.2
Stacks 8.1, 8.4, 8.5

LIFTS (See PLATFORM LIFTS)

LISTENING SYSTEMS (See also AUDIO-AMPLIFICATION SYSTEMS)

Minimum Number: New Construction ..... 4.1.2(18)(b)
Placement of Listening Systems 4.33.6, A4.33.6
Types of Listening Systems 4.33.7, A4.33.7

LIVING ROOMS (See DWELLING UNITS)

LOCKER ROOMS (See PERFORMING AREAS; POSTAL FACILITIES)

LONG-TERM CARE FACILITIES (See HEALTH CARE)

MANEUVERING CLEARANCES AT DOORS (See DOORS)

MARKED CROSSINGS (See CURB RAMPS)

MECHANICAL ROOMS

Minimum Number: Additions ..... 4.1.5(4)
Minimum Number: Alterations ..... 4.1.6(1)(g)
Minimum Number: New Construction ..... 4.1.2(5)
Occupancy Classification: General Exceptions ..... 4.1.4(1)

MEDICINE CABINETS (See BATHROOMS, BATHING FACILITIES & SHOWER ROOMS; DWELLING UNITS)

MEETING ROOMS (See ASSEMBLY AREAS)

MERCANTILE ..... **7.**

Check-out Aisles 7.3
Minimum Number: New Construction 7.1
Occupancy Classification: Mercantile ..... 4.1.4(10)
Security Bollards (See EGRESS)
Service Counters 7.2

MERCANTILE OCCUPANCY ..... 4.1.4(10)

MILITARY

Occupancy Classification: Military Exclusions ..... 4.1.4(2), (a), (b), (c)
Occupancy Classification: Military Housing ..... 4.1.4(3)

Minimum Number

MINIMUM NUMBER (See also MINIMUM REQUIREMENTS) **4.1**

Minimum Number: Additions 4.1.5
Minimum Number: Alterations 4.1.6
Minimum Number: Bathing & Shower Facilities 4.23.8
Minimum Number: Controls & Dispensers 4.22.7, 4.23.7
Minimum Number: Historic Preservation 4.1.7
Minimum Number: Housing 4.1.3
Minimum Number: Lavatories & Mirrors 4.22.6, 4.23.6
Minimum Number: Medicine Cabinets 4.23.9
Minimum Number: New Construction 4.1.2
Minimum Number: Sites & Exterior Facilities 4.1.1
Minimum Number: Urinals 4.22.5, 4.23.5
Minimum Number: Water Closets 4.22.4, 4.23.4

MINIMUM REQUIREMENTS (See DWELLING UNITS; KITCHENS)

MIRRORS (See LAVATORIES & MIRRORS)

MULTI-STORY BUILDING

Minimum Number: New Construction ..... 4.1.2(5)

NEW CONSTRUCTION

Minimum Number: New Construction 4.1.2
Minimum Number: Sites & Exterior Facilities 4.1.1
Minimum Slope of Ramps: New Construction 4.8.2

NOSINGS (See STAIRS)

OCCUPANCY CLASSIFICATIONS (See also Specific Classification) **4.1.4**

OUTDOOR RAMPS (See RAMPS)

OUTDOOR STAIRS (See STAIRS)

OUTPATIENT FACILITIES (See HEALTH CARE)

OVENS (See KITCHENS)

PARALLEL APPROACH (See REACH RANGES)

PARKING & PASSENGER LOADING ZONES **4.6, A4.6**

Accessible Route Locations ..... 4.3.2(1)
Employee Parking: Minimum Number ..... 4.1.1(5)(a), (e), (1), (3)
Entrances 4.6.2, 4.6.3, 4.14.1
Health Care 6.2
Historic Preservation: Applicability ..... 4.1.7(1)(b)
Libraries 8.1
Location 4.6.2
Minimum Number: Alterations ..... 4.1.6(3)(d)(i)
Minimum Number: New Construction ..... 4.1.2(8)
Minimum Number: Sites & Exterior Facilities ..... 4.1.1(1), (5)
Minimum Requirements: Parking in Dwelling Units ..... 4.34.2(4)
Occupancy Classification: Military Exclusions: Parking ..... 4.1.4(2)(c)
Occupancy Classification: Military Housing: Parking ..... 4.1.4(3)
Parking Lots: Minimum Number ..... 4.1.1(5)(a)
Parking Spaces ..... 4.1.1(1), (7)(a), 4.6.3, A4.6.3
Parking Spaces: Minimum Number ..... 4.1.1, (5)(a), (c), (d), (i)(ii), (e), (i)(ii)(iii), 7(a)
Passenger Loading Zones ..... 4.1.1(1), (7)(b), 4.6.5
Passenger Loading Zones: Minimum Number ..... 4.1.1(5)(b)
Signage 4.6.4
Vertical Clearance 4.6.6
Visitor Parking: Minimum Number ..... 4.1.1(5)(a), (d)(3), (e)

PASSING SPACE (See CLEARANCES FOR WHEELCHAIRS)

PATIENT BEDROOMS (See HEALTH CARE)

PATIOS (See DWELLING UNITS)

PERFORMING AREAS

Access to Performing Arts 4.33.5
Dressing Rooms 4.33.5

PERFORMING AREAS (CONTINUED)

Minimum Number 4.33.1
Minimum Number: Alterations ..... 4.1.6(4)(f)(ii)
Stages 4.29.3, 4.33.5

PHYSICALLY HANDICAPPED

Definition of 3.5

PLATFORM LIFTS **4.11, A4.11**

Accessible Route: Changes in Levels 4.10.1
Minimum Number: Alterations ..... 4.1.6(b)
Minimum Number: New Construction ..... 4.1.2(5)
Wheelchair Lifts 4.10.1

POSTAL FACILITIES **9., A9.2**

Attendance-Recording Equipment 9.6
Employee Toilet Rooms (See TOILET ROOMS)
Handrails (See HANDRAILS, GRAB BARS & TUB & SHOWER SEATS)
Letter Drops, Customer Service Desks, Tables or Counters 9.2
Locker Rooms 9.5
Post Office Boxes 9.4
Post Office Lobbies 9.2
Self-Service Postal Centers 9.3
Switches & Controls (See CONTROLS & OPERATING MECHANISMS)

POWER-ASSISTED DOORS (See DOORS)

PRISONS (See CORRECTIONAL FACILITIES)

PROTRUDING OBJECTS **4.4, A4.4**

Head Room 4.4.2
Minimum Number: New Construction ..... 4.1.2(2)
Minimum Number: Sites & Exterior Facilities ..... 4.1.1(3)
Telephones 4.31.4

PUBLIC TELEPHONES (See TELEPHONES)

PUBLIC STREETS & SIDEWALKS (See STREETS & SIDEWALKS)

RAISED CHARACTERS (See SIGNAGE)

RAMPS (See also CURB RAMPS) **4.8, A4.8**

Accessible Routes: Changes in levels 4.3.8
Accessible Routes: Sites ..... A4.3.1(2)
Clear Width 4.8.3
Cross Slope 3.5, 4.3.7, 4.8.6, A4.5.1
Definition of 3.5
Edge Protection 4.8.7
Handrails (See HANDRAILS, GRAB BARS & TUB & SHOWER SEATS)
Historic Preservation: Applicability ..... 4.1.7(1)(b)
Landings 4.8.4, 4.8.7
Minimum Number: Alterations ..... 4.1.6(1)(b)
Minimum Number: Historic Preservation ..... 4.1.7(2)(a)
Minimum Number: New Construction ..... 4.1.2(5)
Outdoor Conditions 4.8.8
Running Slope ..... 3.5, 4.3.7, A4.3.1(2)
Rise 4.8.2, 4.8.5, A4.8.2
Slopes ..... 4.1.6(4)(a), 4.1.7(2)(a), 4.5.2, 4.6.3, 4.6.5
Surfaces (See GROUND & FLOOR SURFACES)

RANGES/COOKTOPS (See KITCHENS)

REACH RANGES

Forward Approach (See also Approach to Specific Element) 4.2.4.1, 4.2.5
Forward Reach 4.2.5, A4.2.5
Minimum Number: New Construction: Reach Ranges ..... 4.1.2(16)(a)
Parallel Approach (See also Approach to Specific Element) 4.2.4.1, 4.2.6
Reach Obstructions 4.2.5, 4.2.6
Side Reach 4.2.6

READING & STUDY AREAS (See LIBRARIES)

RECESSED CHARACTERS (See ELEVATORS)

REFLECTING POOLS (See TACTILE WARNINGS)

REFRIGERATOR/FREEZERS (See KITCHENS)

RESIDENTIAL OCCUPANCY ..... 4.1.4(11)

RESTAURANTS/CAFETERIAS ..... **5.**

Displays (See DISPLAYS)
Food Service Lines 5.2
Minimum Number 5.1
Occupancy Classification: Assembly ..... 4.1.4(4)
Tableware Areas 5.3
Vending Machines 5.4

REVOLVING DOORS & TURNSTILES (See DOORS)

RISE (See RAMPS)

RUNNING SLOPE (See RAMPS)

SEATS (See FIXED OR BUILT-IN SEATING; SEATING, TABLES & WORK SURFACES; HANDRAILS, GRAB BARS, TUB & SHOWER SEATS)

SEATING SPACES (See also FIXED OR BUILT-IN SEATING; SEATING, TABLES & WORK SURFACES)

SEATING, TABLES & WORK SURFACES (See FIXED OR BUILT-IN SEATING) **4.32, A4.32**

Bathtub Seats (See HANDRAILS, GRAB BARS & TUB & SHOWER SEATS)
Bathtub Seats in Dwelling Units (See DWELLING UNITS)
Counter Work Surfaces in Kitchens (See KITCHENS)
Fixed Seats for Telephones (See TELEPHONES)
Letter Drops, Customer Service Desks, Tables or Counters (See POSTAL FACILITIES)
Height of Work Surfaces 4.32.4, A4.32.4
Knee Clearance (See KNEE & TOE CLEARANCES)
Library Seating & Tables 8.2
Minimum Number: Alterations ..... 4.1.6(3)(d)(vi), (4)(f)(i)
Minimum Number: New Construction ..... 4.1.2(17), (18)
Placement of Wheelchairs in Seating Areas (See ASSEMBLY AREAS)
Ranges & Cooktop Surfaces (See KITCHENS)
Restaurant Seating 5.1
Seating Spaces 4.32.2
Shower Seats (See HANDRAILS, GRAB BARS & TUB & SHOWER SEATS)
Shower Seats in Dwelling Units (See DWELLING UNITS)

SECURITY BOLLARDS (See EGRESS)

SELF-SERVICE POSTAL CENTERS (See POSTAL FACILITIES)

SERVICE COUNTERS (See MERCANTILE)

SERVICE ENTRANCES (See ENTRANCES)

SHOWER FACILITIES/SHOWERS (See BATHROOMS, BATHING FACILITIES & SHOWER ROOMS; DWELLING UNITS)

SHOWER SPRAY UNITS

Bathubs: Fixed or Hand-held Shower Units 4.20.6
Dwelling Units: Fixed or Hand-held Shower Units ..... 4.34.5.4(5), 4.34.5.5(5)
Shower Stalls: Fixed or Hand-held Shower Units 4.21.6

SHOWER STALLS **4.21**

Controls (See CONTROLS & OPERATING MECHANISMS)
Curbs in Shower Stalls 4.21.7, A4.21.1
Handrails (See HANDRAILS, GRAB BARS & TUB & SHOWER SEATS)
Shower Enclosures 4.21.8
Shower Seats (See HANDRAILS, GRAB BARS & TUB & SHOWER SEATS)

SIDE REACH (See REACH RANGES)

SIDES OF CURB RAMPS (See CURB RAMPS)

SIDEWALKS (See STREETS & SIDEWALKS)

SIGNAGE **4.30, A4.30**
Character Proportion 4.10.5, 4.30.2, 4.30.4, A4.30.2, A4.30.4
Color Contrast 4.30.3, A4.30.3
Definition of 3.5
Directional Signs ..... 4.1.7(2)(b)
Historic Preservation: Applicability ..... 4.1.7(1)(b)
Incised or Raised Characters 4.30.4, A4.30.4
Indented Characters 4.30.4, A4.30.4
Interior Signage Mounting Height ..... 4.1.7(2)(e), 4.30.6
Interior Signage Mounting Locations ..... 4.1.2(15), (16), 4.1.7(2)(e), 4.30.6, A4.30.1
Illumination Levels A4.30.1
Minimum Number: Historic Preservation ..... 4.1.7(2)(b),(e)
Minimum Number: New Construction ..... 4.1.2(15), (16)(a)
Parking & Passenger Loading Zones: Signage 4.6.4
Stroke Width 4.30.2, 4.30.4, A4.30.2
Symbol of Accessibility (See INTERNATIONAL SYMBOL OF ACCESSIBILITY)

SINKS **4.24**
Adaptability: Consumer Information ..... 4.34.4(1), (4), (5)
Clear Floor Space 4.24.5
Depth of Sink Bowl ..... 4.24.4, 4.34.6.5(3)
Exposed Pipes & Surfaces 4.24.6
Faucets (See FAUCETS)
Height ..... 4.24.2, 4.34.4(1), (5), 4.34.6.5(1)
Sinks in Dwelling Units ..... 4.34.6.5, A4.34.6.1, .5
Sink Knee Clearance (See KNEE & TOE CLEARANCES)

SITES & EXTERIOR FACILITIES **4.1.1**
Definition of (See Site) 3.5

SLEEPING AREAS (See DWELLING UNITS)

SLEEPING ACCOMMODATIONS (See also DWELLING UNITS; HEALTH CARE)
Auxiliary Alarms (See ALARMS)
Minimum Number: New Construction ..... 4.1.2(13)
Occupancy Classification: Residential ..... 4.1.4(11)

SLIDING DOORS (See DOORS)

SLOPES (See RAMPS)

SPACES (See ELEMENTS & SPACES)

STACKS (See LIBRARIES)

STAGES (See PERFORMING AREAS)

STAIRS **4.9**
Accessible Route: Changes in Levels 4.3.8
Ground & Floor Surfaces 4.5.1, A4.5.1
Handrails (See HANDRAILS, GRAB BARS & TUB & SHOWER SEATS)
Minimum Number: Alterations ..... 4.1.6(1)(b), (d), (4)(b)
Minimum Number: New Construction ..... 4.1.2(4)
Nosings 4.9.3
Outdoor Stairs 4.9.6
Ramps: General A4.8.1, A4.8.5
Risers ..... 4.9.2, 4.9.3, 4.9.4(2)
Steps 4.9.2
Tactile Warnings at Stairs (See TACTILE WARNINGS)
Treads 4.9.2

STEPS (See STAIRS)

STORAGE **4.25**
Clothes Rods 4.25.3
Clear Floor Space 4.25.2
Fixed Storage Facilities 4.25.1
Height 4.25.3
Hardware (See CONTROLS & OPERATING MECHANISMS)
Kitchen Storage (See KITCHENS)

STORAGE (CONTINUED)

Minimum Number: Additions ..... 4.1.5(4)
Minimum Number: Alterations ..... 4.1.6(3)(d)(iii)
Minimum Number: New Construction ..... 4.1.2(11)
Occupancy Classification: Business ..... 4.1.4(5)
Occupancy Classification: Hazardous ..... 4.1.4(8)
Occupancy Classification: Storage ..... 4.1.4(12)
Storage Cabinets ..... 4.1.2(11), 4.1.4(12), 4.25.1
Storage in Dwelling Units (See DWELLING UNITS)

STORAGE OCCUPANCY ..... 4.1.4(12)

STREETS & SIDEWALKS

Accessible Route: General 4.3.1
Accessible Route: Location ..... 4.3.2(1)
Curb Ramps: Islands 4.7.11
Curb Ramp Transitions 4.7.2
Definition of (See Common Use, Public Use, Vehicular Way, Walk) 3.5
Entrances 4.14.1
Gratings 4.5.4
Minimum Number: New Construction ..... 4.1.2(8)
Minimum Number: Sites & Exterior Facilities ..... 4.1.1(1)
Minimum Requirements: Dwelling Units ..... 4.34.2(1)
Occupancy Classification: Military Housing ..... 4.1.4(3)
Outdoor Conditions 4.8.8, 4.9.6
Tactile Warnings on Walking Surfaces (See TACTILE WARNINGS)
Surfaces (See GROUND & FLOOR SURFACES)
Walks 4.3.4

STROKE WIDTH (See SIGNAGE)

STRUCTURALLY IMPRACTICABLE/STRUCTURAL IMPRACTICABILITY

Definition of 3.5
Minimum Number: Alterations ..... 4.1.6(2),(3), (4)(c)(ii), (e), (f)(i), (ii)
Toilet Stalls: Exception 4.17.3

STRUCTURAL REINFORCEMENT (See DWELLING UNITS)

STRUCTURAL STRENGTH (See HANDRAILS, GRAB BARS & TUB & SHOWER SEATS)

SURFACE TEXTURES (See TACTILE WARNINGS)

SYMBOL OF ACCESSIBILITY (See INTERNATIONAL SYMBOL OF ACCESSIBILITY)

TABLES (See SEATING, TABLES & WORK SURFACES)

TABLEWARE AREAS (See RESTAURANTS)

TACTILE CONTROL INDICATORS (See ELEVATORS)

TACTILE WARNINGS **4.29**

Definition of (See also Tactile) 3.5
Elevators: Tactile & Visual Control Indicators ..... 4.10.12(2)
Knurling 4.29.3
Minimum Number: New Construction ..... 4.1.2(14)
Tactile Warnings at Hazardous Vehicular Areas (Reserved) 4.29.5, A4.29.5
Tactile Warnings at Reflecting Pools (Reserved) 4.29.6
Tactile Warnings at Stairs (Reserved) 4.9.5, 4.29.4
Tactile Warnings on Doors to Hazardous Areas 4.29.3, 4.29.7
Tactile Warnings on Walking Surfaces (Reserved) 4.29.7
Textured Surfaces 4.29.3, 4.29.7
Warning Textures on Curb Ramps (Reserved) 4.7.7

TAXI STANDS

Minimum Number: New Construction ..... 4.1.2(8)

TELEPHONES **4.31**

Clear Floor Space 4.31.2
Fixed Seats 4.31.2
Mounting Height of Operable Equipment 4.31.3, A4.31.3
Minimum Number: Alterations ..... 4.1.6(3)(d)(v)

TELEPHONES (CONTINUED)

Minimum Number: New Construction ..... 4.1.2(16)
Occupancy Classification: Business ..... 4.1.4(5)
Occupancy Classification: General Exceptions ..... 4.1.4(1)
Protruding Objects 4.4.1
Public Telephones ..... 4.1.2(16), 4.31.1
Push Button Controls 4.31.1
Telephone Banks ..... 4.1.2(16)(a)
Telephone Books/Directories 4.31.7
Telephone Cord Length 4.31.8
Telephone Cord Length in Elevators 4.10.14
Volume Controls ..... 4.1.2(16) (b), 4.31.5, A4.33.7

TELEPHONE BANKS (See TELEPHONES)

TERRACES (See DWELLING UNITS)

TRAFFIC ISLANDS (See CURB RAMPS)

THRESHOLDS AT DOORWAYS (See DOORS)

TOE CLEARANCE (See KNEE & TOE CLEARANCES)

TOILET FACILITIES (See TOILET ROOMS)

TOILET ROOMS **4.22**

Bathrooms in Dwelling Units (See DWELLING UNITS)
Clear Floor Space 4.22.3
Controls (See CONTROLS & OPERATING MECHANISMS)
Doors (See DOORS)
Employee Toilet Rooms: Postal Facilities 9.1
Historic Preservation: Applicability ..... 4.1.7(1)(b)
Lavatories & Mirrors (See LAVATORIES & MIRRORS)
Minimum Number: Additions ..... 4.1.5(3)
Minimum Number: Alterations ..... 4.1.6(3)(c)(i), (ii), (4)(e)
Minimum Number: Historic Preservation ..... 4.1.7(2)(c)
Minimum Number: New Construction ..... 4.1.2(10)
Minimum Number: Sites & Exterior Facilities ..... 4.1.1(6), (7)
Patient Toilet Rooms (See HEALTH CARE)
Public Toilet Rooms: Libraries 8.1
Unisex Toilets ..... 4.1.6(4)(e), 4.1.7(2)(c)
Urinals (See URINALS)
Water Closets (See WATER CLOSETS)

TOILET STALL (See also DOORS) **4.17, A4.17**

Grab Bars (See HANDRAILS, GRAB BARS & TUB & SHOWER SEATS)
Toilet Stall Doors (See DOORS)
Toilet Stalls in Bathrooms, Bathing Facilities & Shower Rooms 4.23.4
Toe Clearance (See KNEE & TOE CLEARANCES)
Seats (See HANDRAILS, GRAB BARS & TUB & SHOWER SEATS)
Water Closets in Toilet Stalls 4.16, 4.17.2, 4.22.4

TRANSIT FACILITIES

Minimum Number: Alterations: Transit Facilities ..... 4.1.6(1)(b)
Minimum Number: New Contstruction ..... 4.1.2(8)

TREADS (See STAIRS)

TURNSTILES (See DOORS)

UNCURBED INTERSECTIONS (See CURB RAMPS)

UNOBSTRUCTED TURNING SPACES (See CLEARANCES FOR WHEELCHAIRS)

URINALS **4.18**

Clear Floor Space 4.18.3
Controls (See CONTROLS & OPERATING MECHANISMS)
Height 4.18.2
Minimum Number: Bathrooms, Bathing Facilities & Shower Rooms 4.23.5
Minimum Number: Toilet Rooms 4.22.5
Shields 4.18.3
Urinals in Toilet Rooms 4.22.5

UTILITY & MISCELLANEOUS OCCUPANCY ..... 4.1.4(13)

VANITIES (See LAVATORIES & MIRRORS)

VANS

Parking Spaces ..... 4.1.1(5)(c), 4.6.3, A4.6.3
Vertical Clearance 4.6.6

VEHICULAR AREAS/WAYS

Definition of (See also Marked Crossing, Site Improvement) 3.5
Built-up Curb Ramp Location (See CURB RAMPS)
Tactile Warnings at Hazardous Vehicular Areas (See TACTILE WARNINGS)

VENDING MACHINES (See RESTAURANTS; POSTAL FACILITIES)

VERTICAL ACCESS

Definition of (See Entrance) 3.5
Minimum Number: Alterations ..... 4.1.6(b)
Minimum Number: New Construction ..... 4.1.2(8)
Vertical Access Equipment ..... 4.1.6(b)

VERTICAL CLEARANCE (See PARKING & PASSENGER LOADING ZONES)

VISITOR PARKING (See PARKING & PASSENGER LOADING ZONES)

VISUAL ALARMS (See ALARMS)

VISUAL CONTROL INDICATORS (See ELEVATORS)

VOLUME CONTROLS (See TELEPHONES)

WALKS (See STREETS & SIDEWALKS)

WARNING TEXTURES (See TACTILE WARNINGS)

WASHING MACHINES (See DWELLING UNITS)

WATER CLOSETS **4.16, A4.16**

Bathrooms, Bathing Facilities & Shower Rooms with Water Closets 4.23.2, 4.23.4
Clear Floor Space 4.16.2
Controls (See CONTROLS & OPERATING MECHANISMS)
Floor-mounted Water Closets 4.17.3
Grab Bars (See HANDRAILS, GRAB BARS & TUB & SHOWER SEATS)
Height of Water Closets 4.16.3, 4.17.3, A4.16.3
Minimum Number: Alterations ..... 4.1.6(4)(e)
Seats (See HANDRAILS, GRAB BARS & TUB & SHOWER SEATS)
Toilet Rooms with Water Closets 4.22.3, 4.22.4
Toilet Stalls with Water Closets 4.17.2, 4.17.3
Wall-mounted Water Closets 4.17.3
Water Closets in Dwelling Units (See DWELLING UNITS)

WHEELCHAIR LIFTS (See PLATFORM LIFTS)

WHEELCHAIR MANEUVERING, PASSING & TURNING CLEARANCES (See CLEARANCES FOR WHEELCHAIRS)

WINDOWS (Reserved) **4.12**

WORK SURFACES (See SEATING, TABLES & WORK SURFACES)

Revisions issued March 28, 1989

List of Subjects in 41 CFR Part 101-19

Federal buildings and facilities, Government property management, Handicapped.

Accordingly, Title 41 CFR Part 101-19 is amended as set forth below:

1. The authority citation for 41 CFR Part 101-19 continues to read as follows:

Authority: Sec. 205(c), 63 Stat. 390; 40 U.S.C. 486(c).

2. In 41 CFR Subpart 101-19.6, Appendix A is amended as follows:

1. Section 4.1.1(7) is revised to read as follows:

4.1.1 Accessible Sites and Exterior Facilities:

* * * * *

(7) All signs shall comply with §§ 4.30.1, 4.30.2, and 4.30.3. Elements and spaces of accessible facilities which shall comply with § 4.30.5 and shall be identified by the International Symbol of Accessibility are:

(a) Parking spaces designated as reserved for physically handicapped persons;

(b) passenger loading zones;

(c) accessible entrances;

(d) accessible toilet and bathing facilities.

2. Section 4.1.2(15) is revised to read as follows: The Exception remains unchanged and is not published here.

4.1.2 Accessible Buildings: New Construction.

* * * * *

(15) If signs are provided, they shall comply with §§ 4.30.1, 4.30.2 and 4.30.3. In addition, permanent signage that identifies rooms and spaces shall also comply with §§ 4.30.4 and 4.30.6.

* * * * *

3. Section 4.30.1 is revised to read as follows:

4.30.1 * General. Signage shall comply with § 4.30 as specified in § 4.1.

* * * * *

4. Section 4.30.4 is revised as follows:

4.30.4 * Raised Characters or Symbols. Letters and numbers on signs shall be raised 1/32 in (0.8 mm) minimum and shall be sans serif characters. Raised characters or symbols shall be at least 5/8 in (16 mm) high, but no higher than 2 in (50 mm). Symbols or pictographs on signs shall be raised 1/32 in (0.8 mm) minimum.

Dated: October 3, 1988.

Richard G. Austin,

Acting Administrator of General Services.

[FR Doc. 89-7351 Filed 3-27-89; 8:45 am]

BILLING CODE 6820-23-M

[Reprinted from 58 *Federal Register*, 12628, March 28, 1989.]

Appendix to Part 1191—Americans With Disabilities Act (ADA) Accessibility Guidelines for Buildings and Facilities

Americans with Disabilities Act (ADA)

Accessibility Guidelines for Buildings and Facilities

U.S. Architectural & Transportation Barriers Compliance Board
1111 18th Street, N.W., Suite 501
Washington, D.C. 20036-3894
(202) 653-7834 v/TDD
(202) 653-7863 FAX

ADA ACCESSIBILITY GUIDELINES FOR BUILDINGS AND FACILITIES TABLE OF CONTENTS

1. PURPOSE **1**

2. GENERAL **1**

2.1 Provisions for Adults 1
2.2 Equivalent Facilitation 1

3. MISCELLANEOUS INSTRUCTIONS AND DEFINITIONS **1**

3.1 Graphic Conventions 1
3.2 Dimensional Tolerances 2
3.3 Notes 2
3.4 General Terminology 2
3.5 Definitions 2

4. ACCESSIBLE ELEMENTS AND SPACES: SCOPE AND TECHNICAL REQUIREMENTS **5**

4.1 Minimum Requirements 5

4.1.1. Application 5
4.1.2. Accessible Sites and Exterior Facilities: New Construction 5
4.1.3. Accessible Buildings: New Construction 7
4.1.4. (Reserved) 10
4.1.5. Accessible Buildings: Additions 10
4.1.6. Accessible Buildings: Alterations 11
4.1.7. Accessible Buildings: Historic Preservation 13

4.2 Space Allowance and Reach Ranges 14
4.3 Accessible Route 15
4.4 Protruding Objects 21
4.5 Ground and Floor Surfaces 22
4.6 Parking and Passenger Loading Zones 24
4.7 Curb Ramps 26
4.8 Ramps 27
4.9 Stairs 30
4.10 Elevators 30

4.11 Platform Lifts (Wheelchair Lifts) 36
4.12 Windows 36
4.13 Doors 36
4.14 Entrances 40
4.15 Drinking Fountains and Water Coolers 40
4.16 Water Closets 40
4.17 Toilet Stalls 41
4.18 Urinals 44
4.19 Lavatories and Mirrors 44
4.20 Bathtubs 45
4.21 Shower Stalls 45
4.22 Toilet Rooms 45
4.23 Bathrooms, Bathing Facilities, and Shower Rooms 48
4.24 Sinks 49
4.25 Storage 49
4.26 Handrails, Grab Bars, and Tub and Shower Seats 50
4.27 Controls and Operating Mechanisms 51
4.28 Alarms 52
4.29 Detectable Warnings 53
4.30 Signage 53
4.31 Telephones 54
4.32 Fixed or Built-in Seating and Tables 56
4.33 Assembly Areas 56
4.34 Automated Teller Machines 58
4.35 Dressing and Fitting Rooms 58

5. RESTAURANTS AND CAFETERIAS. 59

6. MEDICAL CARE FACILITIES 60

7. BUSINESS AND MERCANTILE 61

8. LIBRARIES 62

9. ACCESSIBLE TRANSIENT LODGING 63

10. TRANSPORTATION FACILITIES 67

APPENDIX A1

1. PURPOSE.

This document sets guidelines for accessibility to buildings and facilities by individuals with disabilities under the Americans with Disabilities Act (ADA) of 1990. These guidelines are to be applied during the design, construction, and alteration of buildings and facilities covered by Titles II and III of the ADA to the extent required by regulations issued by Federal agencies, including the Department of Justice and the Department of Transportation, under the ADA.

The technical specifications 4.2 through 4.35, of these guidelines are the same as those of the American National Standard Institute's document A117.1-1980, except as noted in this text by italics. However, sections 4.1.1 through 4.1.7 and sections 5 through 10 are different from ANSI A117.1 in their entirety and are printed in standard type.

The illustrations and text of ANSI A117.1 are reproduced with permission from the American National Standards Institute. Copies of the standard may be purchased from the American National Standards Institute at 1430 Broadway, New York, New York 10018.

2. GENERAL.

2.1 Provisions for Adults. *The specifications in these guidelines are based upon adult dimensions and anthropometrics.*

2.2* Equivalent Facilitation. *Departures from particular technical and scoping requirements of this guideline by the use of other designs and technologies are permitted where the alternative designs and technologies used will provide substantially equivalent or greater access to and usability of the facility.*

3. MISCELLANEOUS INSTRUCTIONS AND DEFINITIONS.

3.1 Graphic Conventions. Graphic conventions are shown in Table 1. Dimensions that are not marked minimum or maximum are absolute, unless otherwise indicated in the text or captions.

Table 1
Graphic Conventions

Convention	Description
36 / 915	Typical dimension line showing U.S. customary units (in inches) above the line and SI units (in millimeters) below
9 / 230	Dimensions for short distances indicated on extended line
9 / 230 36 / 915	Dimension line showing alternate dimensions required
	Direction of approach
max	Maximum
min	Minimum
	Boundary of clear floor area
℄	Centerline

3.4 General Terminology

3.2 Dimensional Tolerances. All dimensions are subject to conventional building industry tolerances for field conditions.

3.3 Notes. The text of *these guidelines* does not contain notes or footnotes. Additional information, explanations, and advisory materials are located in the Appendix. Paragraphs marked with an asterisk have related, non-mandatory material in the Appendix. In the Appendix, the corresponding paragraph numbers are preceded by an A.

3.4 General Terminology.

comply with. Meet one or more specifications of *these guidelines*.

if, if ... then. Denotes a specification that applies only when the conditions described are present.

may. Denotes an option or alternative.

shall. Denotes a mandatory specification or requirement.

should. Denotes an advisory specification or recommendation.

3.5 Definitions.

Access Aisle. An accessible pedestrian space between elements, such as parking spaces, seating, and desks, that provides clearances appropriate for use of the elements.

Accessible. Describes a site, building, facility, or portion thereof that complies with *these guidelines*.

Accessible Element. An *element* specified by *these guidelines* (for example, telephone, controls, and the like).

Accessible Route. A continuous unobstructed path connecting all accessible elements and spaces of a building or facility. Interior accessible routes may include corridors, floors, ramps, elevators, lifts, and clear floor space at fixtures. Exterior accessible routes may include parking access aisles, curb ramps, *crosswalks at vehicular ways*, walks, ramps, and lifts.

Accessible Space. *Space that complies with these guidelines.*

Adaptability. The ability of certain building spaces and elements, such as kitchen counters, sinks, and grab bars, to be added or altered so as to accommodate the needs of *individuals with or without disabilities* or to accommodate the needs of persons with different types or degrees of disability.

Addition. *An expansion, extension, or increase in the gross floor area of a building or facility.*

Administrative Authority. A governmental agency that adopts or enforces regulations and *guidelines* for the design, construction, or *alteration* of buildings and facilities.

Alteration. *An alteration is a change to a building or facility made by, on behalf of, or for the use of a public accommodation or commercial facility, that affects or could affect the usability of the building or facility or part thereof. Alterations include, but are not limited to, remodeling, renovation, rehabilitation, reconstruction, historic restoration, changes or rearrangement of the structural parts or elements, and changes or rearrangement in the plan configuration of walls and full-height partitions. Normal maintenance, reroofing, painting or wallpapering, or changes to mechanical and electrical systems are not alterations unless they affect the usability of the building or facility.*

Area of Rescue Assistance. *An area, which has direct access to an exit, where people who are unable to use stairs may remain temporarily in safety to await further instructions or assistance during emergency evacuation.*

Assembly Area. A room or space accommodating a *group of* individuals for recreational, educational, political, social, or amusement purposes, or for the consumption of food and drink.

Automatic Door. A door equipped with a power-operated mechanism and controls that open and close the door automatically upon receipt of a momentary actuating signal. The switch that begins the automatic cycle may be a photoelectric device, floor mat, or manual switch (see power-assisted door).

3.5 Definitions

Building. Any structure used and intended for supporting or sheltering any use or occupancy.

Circulation Path. An exterior or interior way of passage from one place to another for pedestrians, including, but not limited to, walks, hallways, courtyards, stairways, and stair landings.

Clear. Unobstructed.

Clear Floor Space. *The minimum unobstructed floor or ground space required to accommodate a single, stationary wheelchair and occupant.*

Closed Circuit Telephone. *A telephone with dedicated line(s) such as a house phone, courtesy phone or phone that must be used to gain entrance to a facility.*

Common Use. Refers to those interior and exterior rooms, spaces, or elements that are made available for the use of a restricted group of people (for example, *occupants of a homeless shelter*, the occupants of an office building, or the guests of such occupants).

Cross Slope. The slope that is perpendicular to the direction of travel (see running slope).

Curb Ramp. A short ramp cutting through a curb or built up to it.

Detectable Warning. *A standardized surface feature built in or applied to walking surfaces or other elements to warn visually impaired people of hazards on a circulation path.*

Dwelling Unit. A single unit which provides a kitchen or food preparation area, in addition to rooms and spaces for living, bathing, sleeping, and the like. *Dwelling units include a single family home or a townhouse used as a transient group home; an apartment building used as a shelter; guestrooms in a hotel that provide sleeping accommodations and food preparation areas; and other similar facilities used on a transient basis. For purposes of these guidelines, use of the term "Dwelling Unit" does not imply the unit is used as a residence.*

Egress, Means of. *A continuous and unobstructed way of exit travel from any point in a building or facility to a public way. A means of egress comprises vertical and horizontal travel and may include intervening room spaces, doorways, hallways, corridors, passageways, balconies, ramps, stairs, enclosures, lobbies, horizontal exits, courts and yards. An accessible means of egress is one that complies with these guidelines and does not include stairs, steps, or escalators. Areas of rescue assistance or evacuation elevators may be included as part of accessible means of egress.*

Element. *An architectural or mechanical component of a building, facility, space, or site, e.g., telephone, curb ramp, door, drinking fountain, seating, or water closet.*

Entrance. *Any access point to a building or portion of a building or facility used for the purpose of entering. An entrance includes the approach walk, the vertical access leading to the entrance platform, the entrance platform itself, vestibules if provided, the entry door(s) or gate(s), and the hardware of the entry door(s) or gate(s).*

Facility. *All or any portion of buildings, structures, site improvements, complexes, equipment, roads, walks, passageways, parking lots, or other real or personal property located on a site.*

Ground Floor. *Any occupiable floor less than one story above or below grade with direct access to grade. A building or facility always has at least one ground floor and may have more than one ground floor as where a split level entrance has been provided or where a building is built into a hillside.*

Mezzanine or Mezzanine Floor. *That portion of a story which is an intermediate floor level placed within the story and having occupiable space above and below its floor.*

Marked Crossing. A crosswalk or other identified path intended for pedestrian use in crossing a vehicular way.

Multifamily Dwelling. Any building containing more than two dwelling units.

Occupiable. *A room or enclosed space designed for human occupancy in which individuals congregate for amusement, educational or similar purposes, or in which occupants are engaged at labor, and which is equipped with means of egress, light, and ventilation.*

3.5 Definitions

Operable Part. A part of a piece of equipment or appliance used to insert or withdraw objects, or to activate, deactivate, or adjust the equipment or appliance (for example, coin slot, pushbutton, handle).

Path of Travel. *(Reserved).*

Power-assisted Door. A door used *for human passage* with a mechanism that helps to open the door, or relieves the opening resistance of a door, upon the activation of a switch or a continued force applied to the door itself.

Public Use. Describes interior or exterior rooms or spaces that are made available to the general public. Public use may be provided at a building or facility that is privately or publicly owned.

Ramp. A walking surface which has a running slope greater than 1:20.

Running Slope. The slope that is parallel to the direction of travel (see cross slope).

Service Entrance. An entrance intended primarily for delivery of goods or services.

Signage. *Displayed* verbal, symbolic, *tactile,* and pictorial information.

Site. A parcel of land bounded by a property line or a designated portion of a public right-of-way.

Site Improvement. Landscaping, paving for pedestrian and vehicular ways, outdoor lighting, recreational facilities, and the like, added to a site.

Sleeping Accommodations. Rooms in which people sleep; for example, dormitory and hotel or motel guest rooms or suites.

Space. *A definable area, e.g., room, toilet room, hall, assembly area, entrance, storage room, alcove, courtyard, or lobby.*

Story. *That portion of a building included between the upper surface of a floor and upper surface of the floor or roof next above. If such portion of a building does not include occupiable space, it is not considered a story for purposes of these guidelines. There may be more than one floor level within a story as in the case of a mezzanine or mezzanines.*

Structural Frame. The structural frame shall be considered to be the columns and the girders, beams, trusses and spandrels having direct connections to the columns and all other members which are essential to the stability of the building as a whole.

Tactile. Describes an object that can be perceived using the sense of touch.

Text Telephone. *Machinery or equipment that employs interactive graphic (i.e., typed) communications through the transmission of coded signals across the standard telephone network. Text telephones can include, for example, devices known as TDD's (telecommunication display devices or telecommunication devices for deaf persons) or computers.*

Transient Lodging. *A building, facility, or portion thereof, excluding inpatient medical care facilities, that contains one or more dwelling units or sleeping accommodations. Transient lodging may include, but is not limited to, resorts, group homes, hotels, motels, and dormitories.*

Vehicular Way. A route intended for vehicular traffic, such as a street, driveway, or parking lot.

Walk. An exterior pathway with a prepared surface intended for pedestrian use, including general pedestrian areas such as plazas and courts.

NOTE: Sections 4.1.1 through 4.1.7 are different from ANSI A117.1 in their entirety and are printed in standard type (ANSI A117.1 does not include scoping provisions).

4.0 Accessible Elements and Spaces: Scope and Technical Requirements

4. ACCESSIBLE ELEMENTS AND SPACES: SCOPE AND TECHNICAL REQUIREMENTS.

4.1 Minimum Requirements

4.1.1* Application.

(1) General. All areas of newly designed or newly constructed buildings and facilities required to be accessible by 4.1.2 and 4.1.3 and altered portions of existing buildings and facilities required to be accessible by 4.1.6 shall comply with these guidelines, 4.1 through 4.35, unless otherwise provided in this section or as modified in a special application section.

(2) Application Based on Building Use. Special application sections 5 through 10 provide additional requirements for restaurants and cafeterias, medical care facilities, business and mercantile, libraries, accessible transient lodging, and transportation facilities. When a building or facility contains more than one use covered by a special application section, each portion shall comply with the requirements for that use.

(3)* Areas Used Only by Employees as Work Areas. Areas that are used only as work areas shall be designed and constructed so that individuals with disabilities can approach, enter, and exit the areas. These guidelines do not require that any areas used only as work areas be constructed to permit maneuvering within the work area or be constructed or equipped (i.e., with racks or shelves) to be accessible.

(4) Temporary Structures. These guidelines cover temporary buildings or facilities as well as permanent facilities. Temporary buildings and facilities are not of permanent construction but are extensively used or are essential for public use for a period of time. Examples of temporary buildings or facilities covered by these guidelines include, but are not limited to: reviewing stands, temporary classrooms, bleacher areas, exhibit areas, temporary banking facilities, temporary health screening services, or temporary safe pedestrian passageways around a construction site. Structures, sites and equipment directly associated with the actual processes of construction, such as scaffolding, bridging, materials hoists, or construction trailers are not included.

(5) General Exceptions.

(a) In new construction, a person or entity is not required to meet fully the requirements of these guidelines where that person or entity can demonstrate that it is structurally impracticable to do so. Full compliance will be considered structurally impracticable only in those rare circumstances when the unique characteristics of terrain prevent the incorporation of accessibility features. If full compliance with the requirements of these guidelines is structurally impracticable, a person or entity shall comply with the requirements to the extent it is not structurally impracticable. Any portion of the building or facility which can be made accessible shall comply to the extent that it is not structurally impracticable.

(b) Accessibility is not required to (i) observation galleries used primarily for security purposes; or (ii) in non-occupiable spaces accessed only by ladders, catwalks, crawl spaces, very narrow passageways, or freight (non-passenger) elevators, and frequented only by service personnel for repair purposes; such spaces include, but are not limited to, elevator pits, elevator penthouses, piping or equipment catwalks.

4.1.2 Accessible Sites and Exterior Facilities: New Construction. An accessible site shall meet the following minimum requirements:

(1) At least one accessible route complying with 4.3 shall be provided within the boundary of the site from public transportation stops, accessible parking spaces, passenger loading zones if provided, and public streets or sidewalks, to an accessible building entrance.

(2) At least one accessible route complying with 4.3 shall connect accessible buildings, accessible facilities, accessible elements, and accessible spaces that are on the same site.

(3) All objects that protrude from surfaces or posts into circulation paths shall comply with 4.4.

4.1.2 Accessible Sites and Exterior Facilities: New Construction

(4) Ground surfaces along accessible routes and in accessible spaces shall comply with 4.5.

(5) (a) If parking spaces are provided for self-parking by employees or visitors, or both, then accessible spaces complying with 4.6 shall be provided in each such parking area in conformance with the table below. Spaces required by the table need not be provided in the particular lot. They may be provided in a different location if equivalent or greater accessibility, in terms of distance from an accessible entrance, cost and convenience is ensured.

Total Parking in Lot	Required Minimum Number of Accessible Spaces
1 to 25	1
26 to 50	2
51 to 75	3
76 to 100	4
101 to 150	5
151 to 200	6
201 to 300	7
301 to 400	8
401 to 500	9
501 to 1000	2 percent of total
1001 and over	20 plus 1 for each 100 over 1000

Except as provided in (b), access aisles adjacent to accessible spaces shall be 60 in (1525 mm) wide minimum.

(b) One in every eight accessible spaces, but not less than one, shall be served by an access aisle 96 in (2440 mm) wide minimum and shall be designated "van accessible" as required by 4.6.4. The vertical clearance at such spaces shall comply with 4.6.5. All such spaces may be grouped on one level of a parking structure.

EXCEPTION: Provision of all required parking spaces in conformance with "Universal Parking Design" (see appendix A4.6.3) is permitted.

(c) If passenger loading zones are provided, then at least one passenger loading zone shall comply with 4.6.6.

(d) At facilities providing medical care and other services for persons with mobility impairments, parking spaces complying with 4.6 shall be provided in accordance with 4.1.2(5)(a) except as follows:

(i) Outpatient units and facilities: 10 percent of the total number of parking spaces provided serving each such outpatient unit or facility;

(ii) Units and facilities that specialize in treatment or services for persons with mobility impairments: 20 percent of the total number of parking spaces provided serving each such unit or facility.

(e)*Valet parking Valet parking facilities shall provide a passenger loading zone complying with 4.6.6 located on an accessible route to the entrance of the facility. Paragraphs 5(a), 5(b), and 5(d) of this section do not apply to valet parking facilities.

(6) If toilet facilities are provided on a site, then each such public or common use toilet facility shall comply with 4.22. If bathing facilities are provided on a site, then each such public or common use bathing facility shall comply with 4.23.

For single user portable toilet or bathing units clustered at a single location, at least 5% but no less than one toilet unit or bathing unit complying with 4.22 or 4.23 shall be installed at each cluster whenever typical inaccessible units are provided. Accessible units shall be identified by the International Symbol of Accessibility.

EXCEPTION: Portable toilet units at construction sites used exclusively by construction personnel are not required to comply with 4.1.2(6).

(7) Building Signage. Signs which designate permanent rooms and spaces shall comply with 4.30.1, 4.30.4, 4.30.5 and 4.30.6. Other signs which provide direction to, or information about, functional spaces of the building shall comply with 4.30.1, 4.30.2, 4.30.3, and 4.30.5. Elements and spaces of accessible facilities which shall be identified by the International Symbol of Accessibility and which shall comply with 4.30.7 are:

(a) Parking spaces designated as reserved for individuals with disabilities;

4.1.3 Accessible Buildings: New Construction

(b) Accessible passenger loading zones;

(c) Accessible entrances when not all are accessible (inaccessible entrances shall have directional signage to indicate the route to the nearest accessible entrance);

(d) Accessible toilet and bathing facilities when not all are accessible.

4.1.3 Accessible Buildings: New Construction. Accessible buildings and facilities shall meet the following minimum requirements:

(1) At least one accessible route complying with 4.3 shall connect accessible building or facility entrances with all accessible spaces and elements within the building or facility.

(2) All objects that overhang or protrude into circulation paths shall comply with 4.4.

(3) Ground and floor surfaces along accessible routes and in accessible rooms and spaces shall comply with 4.5.

(4) Interior and exterior stairs connecting levels that are not connected by an elevator, ramp, or other accessible means of vertical access shall comply with 4.9.

(5)* One passenger elevator complying with 4.10 shall serve each level, including mezzanines, in all multi-story buildings and facilities unless exempted below. If more than one elevator is provided, each full passenger elevator shall comply with 4.10.

EXCEPTION 1: Elevators are not required in facilities that are less than three stories or that have less than 3000 square feet per story unless the building is a shopping center, a shopping mall, or the professional office of a health care provider, or another type of facility as determined by the Attorney General. The elevator exemption set forth in this paragraph does not obviate or limit in any way the obligation to comply with the other accessibility requirements established in section 4.1.3. For example, floors above or below the accessible ground floor must meet the requirements of this section except for elevator service. If toilet or bathing facilities are provided on a level not served by an elevator, then toilet or bathing facilities must be provided on the accessible ground floor. In new construction if a building or facility is eligible for this exemption but a full passenger elevator is nonetheless planned, that elevator shall meet the requirements of 4.10 and shall serve each level in the building. A full passenger elevator that provides service from a garage to only one level of a building or facility is not required to serve other levels.

EXCEPTION 2: Elevator pits, elevator penthouses, mechanical rooms, piping or equipment catwalks are exempted from this requirement.

EXCEPTION 3: Accessible ramps complying with 4.8 may be used in lieu of an elevator.

EXCEPTION 4: Platform lifts (wheelchair lifts) complying with 4.11 of this guideline and applicable state or local codes may be used in lieu of an elevator only under the following conditions:

(a) To provide an accessible route to a performing area in an assembly occupancy.

(b) To comply with the wheelchair viewing position line-of-sight and dispersion requirements of 4.33.3.

(c) To provide access to incidental occupiable spaces and rooms which are not open to the general public and which house no more than five persons, including but not limited to equipment control rooms and projection booths.

(d) To provide access where existing site constraints or other constraints make use of a ramp or an elevator infeasible.

(6) Windows: (Reserved).

(7) Doors:

(a) At each accessible entrance to a building or facility, at least one door shall comply with 4.13.

(b) Within a building or facility, at least one door at each accessible space shall comply with 4.13.

(c) Each door that is an element of an accessible route shall comply with 4.13.

4.1.3 Accessible Buildings: New Construction

(d) Each door required by 4.3.10, Egress, shall comply with 4.13.

(8) In new construction, at a minimum, the requirements in (a) and (b) below shall be satisfied independently:

(a)(i) At least 50% of all public entrances (excluding those in (b) below) must be accessible. At least one must be a ground floor entrance. Public entrances are any entrances that are not loading or service entrances.

(ii) Accessible entrances must be provided in a number at least equivalent to the number of exits required by the applicable building/fire codes. (This paragraph does not require an increase in the total number of entrances planned for a facility.)

(iii) An accessible entrance must be provided to each tenancy in a facility (for example, individual stores in a strip shopping center).

One entrance may be considered as meeting more than one of the requirements in (a). Where feasible, accessible entrances shall be the entrances used by the majority of people visiting or working in the building.

(b)(i) In addition, if direct access is provided for pedestrians from an enclosed parking garage to the building, at least one direct entrance from the garage to the building must be accessible.

(ii) If access is provided for pedestrians from a pedestrian tunnel or elevated walkway, one entrance to the building from each tunnel or walkway must be accessible.

One entrance may be considered as meeting more than one of the requirements in (b).

Because entrances also serve as emergency exits whose proximity to all parts of buildings and facilities is essential, it is preferable that all entrances be accessible.

(c) If the only entrance to a building, or tenancy in a facility, is a service entrance, that entrance shall be accessible.

(d) Entrances which are not accessible shall have directional signage complying with 4.30.1, 4.30.2, 4.30.3, and 4.30.5, which indicates the location of the nearest accessible entrance.

(9)* In buildings or facilities, or portions of buildings or facilities, required to be accessible, accessible means of egress shall be provided in the same number as required for exits by local building/life safety regulations. Where a required exit from an occupiable level above or below a level of accessible exit discharge is not accessible, an area of rescue assistance shall be provided on each such level (in a number equal to that of inaccessible required exits). Areas of rescue assistance shall comply with 4.3.11. A horizontal exit, meeting the requirements of local building/life safety regulations, shall satisfy the requirement for an area of rescue assistance.

EXCEPTION: Areas of rescue assistance are not required in buildings or facilities having a supervised automatic sprinkler system.

(10)* Drinking Fountains:

(a) Where only one drinking fountain is provided on a floor there shall be a drinking fountain which is accessible to individuals who use wheelchairs in accordance with 4.15 and one accessible to those who have difficulty bending or stooping. (This can be accommodated by the use of a "hi-lo" fountain; by providing one fountain accessible to those who use wheelchairs and one fountain at a standard height convenient for those who have difficulty bending; by providing a fountain accessible under 4.15 and a water cooler; or by such other means as would achieve the required accessibility for each group on each floor.)

(b) Where more than one drinking fountain or water cooler is provided on a floor, 50% of those provided shall comply with 4.15 and shall be on an accessible route.

(11) Toilet Facilities: If toilet rooms are provided, then each public and common use toilet room shall comply with 4.22. Other toilet rooms provided for the use of occupants of specific spaces (i.e., a private toilet room for the occupant of a private office) shall be adaptable. If bathing rooms are provided, then each public and common use bathroom shall comply with 4.23. Accessible toilet rooms and bathing facilities shall be on an accessible route.

4.1.3 Accessible Buildings: New Construction

(12) Storage, Shelving and Display Units:

(a) If fixed or built-in storage facilities such as cabinets, shelves, closets, and drawers are provided in accessible spaces, at least one of each type provided shall contain storage space complying with 4.25. Additional storage may be provided outside of the dimensions required by 4.25.

(b) Shelves or display units allowing self-service by customers in mercantile occupancies shall be located on an accessible route complying with 4.3. Requirements for accessible reach range do not apply.

(13) Controls and operating mechanisms in accessible spaces, along accessible routes, or as parts of accessible elements (for example, light switches and dispenser controls) shall comply with 4.27.

(14) If emergency warning systems are provided, then they shall include both audible alarms and visual alarms complying with 4.28. Sleeping accommodations required to comply with 9.3 shall have an alarm system complying with 4.28. Emergency warning systems in medical care facilities may be modified to suit standard health care alarm design practice.

(15) Detectable warnings shall be provided at locations as specified in 4.29.

(16) Building Signage:

(a) Signs which designate permanent rooms and spaces shall comply with 4.30.1, 4.30.4, 4.30.5 and 4.30.6.

(b) Other signs which provide direction to or information about functional spaces of the building shall comply with 4.30.1, 4.30.2, 4.30.3, and 4.30.5.

EXCEPTION: Building directories, menus, and all other signs which are temporary are not required to comply.

(17) Public Telephones:

(a) If public pay telephones, public closed circuit telephones, or other public telephones are provided, then they shall comply with 4.31.2 through 4.31.8 to the extent required by the following table:

Number of each type of telephone provided on each floor	Number of telephones required to comply with 4.31.2 through 4.31.8[1]
1 or more single unit	1 per floor
1 bank[2]	1 per floor
2 or more banks[2]	1 per bank. Accessible unit may be installed as a single unit in proximity (either visible or with signage) to the bank. At least one public telephone per floor shall meet the requirements for a forward reach telephone[3].

[1] Additional public telephones may be installed at any height. Unless otherwise specified, accessible telephones may be either forward or side reach telephones.

[2] A bank consists of two or more adjacent public telephones, often installed as a unit.

[3] EXCEPTION: For exterior installations only, if dial tone first service is available, then a side reach telephone may be installed instead of the required forward reach telephone (i.e., one telephone in proximity to each bank shall comply with 4.31).

(b)* All telephones required to be accessible and complying with 4.31.2 through 4.31.8 shall be equipped with a volume control. In addition, 25 percent, but never less than one, of all other public telephones provided shall be equipped with a volume control and shall be dispersed among all types of public telephones, including closed circuit telephones, throughout the building or facility. Signage complying with applicable provisions of 4.30.7 shall be provided.

(c) The following shall be provided in accordance with 4.31.9:

(i) if a total number of four or more public pay telephones (including both interior and exterior phones) is provided at a site, and at least one is in an interior location, then at least one interior public text telephone shall be provided.

(ii) if an interior public pay telephone is provided in a stadium or arena, in a convention center, in a hotel with a convention center, or

4.1.3 Accessible Buildings: New Construction

in a covered mall, at least one interior public text telephone shall be provided in the facility.

(iii) If a public pay telephone is located in or adjacent to a hospital emergency room, hospital recovery room, or hospital waiting room, one public text telephone shall be provided at each such location.

(d) Where a bank of telephones in the interior of a building consists of three or more public pay telephones, at least one public pay telephone in each such bank shall be equipped with a shelf and outlet in compliance with 4.31.9(2).

(18) If fixed or built-in seating or tables (including, but not limited to, study carrels and student laboratory stations), are provided in accessible public or common use areas, at least five percent (5%), but not less than one, of the fixed or built-in seating areas or tables shall comply with 4.32. An accessible route shall lead to and through such fixed or built-in seating areas, or tables.

(19)* Assembly areas:

(a) In places of assembly with fixed seating accessible wheelchair locations shall comply with 4.33.2, 4.33.3, and 4.33.4 and shall be provided consistent with the following table:

Capacity of Seating in Assembly Areas	Number of Required Wheelchair Locations
4 to 25	1
26 to 50	2
51 to 300	4
301 to 500	6
over 500	6, plus 1 additional space for each total seating capacity increase of 100

In addition, one percent, but not less than one, of all fixed seats shall be aisle seats with no armrests on the aisle side, or removable or folding armrests on the aisle side. Each such seat shall be identified by a sign or marker. Signage notifying patrons of the availability of such seats shall be posted at the ticket office. Aisle seats are not required to comply with 4.33.4.

(b) This paragraph applies to assembly areas where audible communications are integral to the use of the space (e.g., concert and lecture halls, playhouses and movie theaters, meeting rooms, etc.). Such assembly areas, if (1) they accommodate at least 50 persons, or if they have audio-amplification systems, and (2) they have fixed seating, shall have a permanently installed assistive listening system complying with 4.33. For other assembly areas, a permanently installed assistive listening system, or an adequate number of electrical outlets or other supplementary wiring necessary to support a portable assistive listening system shall be provided. The minimum number of receivers to be provided shall be equal to 4 percent of the total number of seats, but in no case less than two. Signage complying with applicable provisions of 4.30 shall be installed to notify patrons of the availability of a listening system.

(20) Where automated teller machines (ATMs) are provided, each ATM shall comply with the requirements of 4.34 except where two or more are provided at a location, then only one must comply.

EXCEPTION: Drive-up-only automated teller machines are not required to comply with 4.27.2, 4.27.3 and 4.34.3.

(21) Where dressing and fitting rooms are provided for use by the general public, patients, customers or employees, 5 percent, but never less than one, of dressing rooms for each type of use in each cluster of dressing rooms shall be accessible and shall comply with 4.35.

Examples of types of dressing rooms are those serving different genders or distinct and different functions as in different treatment or examination facilities.

4.1.4 (Reserved).

4.1.5 Accessible Buildings: Additions. Each addition to an existing building or facility shall be regarded as an alteration. Each space or element added to the existing building or facility shall comply with the applicable provisions of 4.1.1 to 4.1.3, Minimum Requirements (for New Construction) and the applicable technical specifications of 4.2 through 4.35 and sections 5 through 10. Each addition that

affects or could affect the usability of an area containing a primary function shall comply with 4.1.6(2).

4.1.6 Accessible Buildings: Alterations.

(1) General. Alterations to existing buildings and facilities shall comply with the following:

(a) No alteration shall be undertaken which decreases or has the effect of decreasing accessibility or usability of a building or facility below the requirements for new construction at the time of alteration.

(b) If existing elements, spaces, or common areas are altered, then each such altered element, space, feature, or area shall comply with the applicable provisions of 4.1.1 to 4.1.3 Minimum Requirements (for New Construction). If the applicable provision for new construction requires that an element, space, or common area be on an accessible route, the altered element, space, or common area is not required to be on an accessible route except as provided in 4.1.6(2) (Alterations to an Area Containing a Primary Function.)

(c) If alterations of single elements, when considered together, amount to an alteration of a room or space in a building or facility, the entire space shall be made accessible.

(d) No alteration of an existing element, space, or area of a building or facility shall impose a requirement for greater accessibility than that which would be required for new construction. For example, if the elevators and stairs in a building are being altered and the elevators are, in turn, being made accessible, then no accessibility modifications are required to the stairs connecting levels connected by the elevator. If stair modifications to correct unsafe conditions are required by other codes, the modifications shall be done in compliance with these guidelines unless technically infeasible.

(e) At least one interior public text telephone complying with 4.31.9 shall be provided if:

(i) alterations to existing buildings or facilities with less than four exterior or interior public pay telephones would increase the total number to four or more telephones with at least one in an interior location; or

(ii) alterations to one or more exterior or interior public pay telephones occur in an existing building or facility with four or more public telephones with at least one in an interior location.

(f) If an escalator or stair is planned or installed where none existed previously and major structural modifications are necessary for such installation, then a means of accessible vertical access shall be provided that complies with the applicable provisions of 4.7, 4.8, 4.10, or 4.11.

(g) In alterations, the requirements of 4.1.3(9), 4.3.10 and 4.3.11 do not apply.

(h)*Entrances: If a planned alteration entails alterations to an entrance, and the building has an accessible entrance, the entrance being altered is not required to comply with 4.1.3(8), except to the extent required by 4.1.6(2). If a particular entrance is not made accessible, appropriate accessible signage indicating the location of the nearest accessible entrance(s) shall be installed at or near the inaccessible entrance, such that a person with disabilities will not be required to retrace the approach route from the inaccessible entrance.

(i) If the alteration work is limited solely to the electrical, mechanical, or plumbing system, or to hazardous material abatement, or automatic sprinkler retrofitting, and does not involve the alteration of any elements or spaces required to be accessible under these guidelines, then 4.1.6(2) does not apply.

(j) EXCEPTION: In alteration work, if compliance with 4.1.6 is technically infeasible, the alteration shall provide accessibility to the maximum extent feasible. Any elements or features of the building or facility that are being altered and can be made accessible shall be made accessible within the scope of the alteration.

Technically Infeasible. Means, with respect to an alteration of a building or a facility, that it has little likelihood of being accomplished because existing structural conditions would require removing or altering a load-bearing member which is an essential part of the structural frame; or because other existing physical or site constraints prohibit modification or

4.1.6 Accessible Buildings: Alterations

addition of elements, spaces, or features which are in full and strict compliance with the minimum requirements for new construction and which are necessary to provide accessibility.

(k) EXCEPTION:

(i) These guidelines do not require the installation of an elevator in an altered facility that is less than three stories or has less than 3,000 square feet per story unless the building is a shopping center, a shopping mall, the professional office of a health care provider, or another type of facility as determined by the Attorney General.

(ii) The exemption provided in paragraph (i) does not obviate or limit in any way the obligation to comply with the other accessibility requirements established in these guidelines. For example, alterations to floors above or below the ground floor must be accessible regardless of whether the altered facility has an elevator. If a facility subject to the elevator exemption set forth in paragraph (i) nonetheless has a full passenger elevator, that elevator shall meet, to the maximum extent feasible, the accessibility requirements of these guidelines.

(2) Alterations to an Area Containing a Primary Function: In addition to the requirements of 4.1.6(1), an alteration that affects or could affect the usability of or access to an area containing a primary function shall be made so as to ensure that, to the maximum extent feasible, the path of travel to the altered area and the restrooms, telephones, and drinking fountains serving the altered area, are readily accessible to and usable by individuals with disabilities, unless such alterations are disproportionate to the overall alterations in terms of cost and scope (as determined under criteria established by the Attorney General).

(3) Special Technical Provisions for Alterations to Existing Buildings and Facilities:

(a) Ramps: Curb ramps and interior or exterior ramps to be constructed on sites or in existing buildings or facilities where space limitations prohibit the use of a 1:12 slope or less may have slopes and rises as follows:

(i) A slope between 1:10 and 1:12 is allowed for a maximum rise of 6 inches.

(ii) A slope between 1:8 and 1:10 is allowed for a maximum rise of 3 inches. A slope steeper than 1:8 is not allowed.

(b) Stairs: Full extension of handrails at stairs shall not be required in alterations where such extensions would be hazardous or impossible due to plan configuration.

(c) Elevators:

(i) If safety door edges are provided in existing automatic elevators, automatic door reopening devices may be omitted (see 4.10.6).

(ii) Where existing shaft configuration or technical infeasibility prohibits strict compliance with 4.10.9, the minimum car plan dimensions may be reduced by the minimum amount necessary, but in no case shall the inside car area be smaller than 48 in by 48 in.

(iii) Equivalent facilitation may be provided with an elevator car of different dimensions when usability can be demonstrated and when all other elements required to be accessible comply with the applicable provisions of 4.10. For example, an elevator of 47 in by 69 in (1195 mm by 1755 mm) with a door opening on the narrow dimension, could accommodate the standard wheelchair clearances shown in Figure 4.

(d) Doors:

(i) Where it is technically infeasible to comply with clear opening width requirements of 4.13.5, a projection of 5/8 in maximum will be permitted for the latch side stop.

(ii) If existing thresholds are 3/4 in high or less, and have (or are modified to have) a beveled edge on each side, they may remain.

(e) Toilet Rooms:

(i) Where it is technically infeasible to comply with 4.22 or 4.23, the installation of at least one unisex toilet/bathroom per floor, located in the same area as existing toilet facilities, will be permitted in lieu of modifying existing toilet facilities to be accessible. Each unisex toilet room shall contain one water closet complying with 4.16 and one lavatory complying with 4.19, and the door shall have a privacy latch.

(ii) Where it is technically infeasible to install a required standard stall (Fig. 30(a)), or where other codes prohibit reduction of the fixture count (i.e., removal of a water closet in order to create a double-wide stall), either alternate stall (Fig.30(b)) may be provided in lieu of the standard stall.

(iii) When existing toilet or bathing facilities are being altered and are not made accessible, signage complying with 4.30.1, 4.30.2, 4.30.3, 4.30.5, and 4.30.7 shall be provided indicating the location of the nearest accessible toilet or bathing facility within the facility.

(f) Assembly Areas:

(i) Where it is technically infeasible to disperse accessible seating throughout an altered assembly area, accessible seating areas may be clustered. Each accessible seating area shall have provisions for companion seating and shall be located on an accessible route that also serves as a means of emergency egress.

(ii) Where it is technically infeasible to alter all performing areas to be on an accessible route, at least one of each type of performing area shall be made accessible.

(g) Platform Lifts (Wheelchair Lifts): In alterations, platform lifts (wheelchair lifts) complying with 4.11 and applicable state or local codes may be used as part of an accessible route. The use of lifts is not limited to the four conditions in exception 4 of 4.1.3(5).

(h) Dressing Rooms: In alterations where technical infeasibility can be demonstrated, one dressing room for each sex on each level shall be made accessible. Where only unisex dressing rooms are provided, accessible unisex dressing rooms may be used to fulfill this requirement.

4.1.7 Accessible Buildings: Historic Preservation.

(1) Applicability:

(a) General Rule. Alterations to a qualified historic building or facility shall comply with 4.1.6 Accessible Buildings: Alterations, the applicable technical specifications of 4.2 through 4.35 and the applicable special application sections 5 through 10 unless it is determined in accordance with the procedures in 4.1.7(2) that compliance with the requirements for accessible routes (exterior and interior), ramps, entrances, or toilets would threaten or destroy the historic significance of the building or facility in which case the alternative requirements in 4.1.7(3) may be used for the feature.

EXCEPTION: (Reserved).

(b) Definition. A qualified historic building or facility is a building or facility that is:

(i) Listed in or eligible for listing in the National Register of Historic Places; or

(ii) Designated as historic under an appropriate State or local law.

(2) Procedures:

(a) Alterations to Qualified Historic Buildings and Facilities Subject to Section 106 of the National Historic Preservation Act:

(i) Section 106 Process. Section 106 of the National Historic Preservation Act (16 U.S.C. 470 f) requires that a Federal agency with jurisdiction over a Federal, federally assisted, or federally licensed undertaking consider the effects of the agency's undertaking on buildings and facilities listed in or eligible for listing in the National Register of Historic Places and give the Advisory Council on Historic Preservation a reasonable opportunity to comment on the undertaking prior to approval of the undertaking.

(ii) ADA Application. Where alterations are undertaken to a qualified historic building or facility that is subject to section 106 of the National Historic Preservation Act, the Federal agency with jurisdiction over the undertaking shall follow the section 106 process. If the State Historic Preservation Officer or Advisory Council on Historic Preservation agrees that compliance with the requirements for accessible routes (exterior and interior), ramps, entrances, or toilets would threaten or destroy the historic significance of the building or facility, the alternative requirements in 4.1.7(3) may be used for the feature.

4.2 Space Allowance and Reach Ranges

(b) Alterations to Qualified Historic Buildings and Facilities Not Subject to Section 106 of the National Historic Preservation Act. Where alterations are undertaken to a qualified historic building or facility that is not subject to section 106 of the National Historic Preservation Act, if the entity undertaking the alterations believes that compliance with the requirements for accessible routes (exterior and interior), ramps, entrances, or toilets would threaten or destroy the historic significance of the building or facility and that the alternative requirements in 4.1.7(3) should be used for the feature, the entity should consult with the State Historic Preservation Officer. If the State Historic Preservation Officer agrees that compliance with the accessibility requirements for accessible routes (exterior and interior), ramps, entrances or toilets would threaten or destroy the historical significance of the building or facility, the alternative requirements in 4.1.7(3) may be used.

(c) Consultation With Interested Persons. Interested persons should be invited to participate in the consultation process, including State or local accessibility officials, individuals with disabilities, and organizations representing individuals with disabilities.

(d) Certified Local Government Historic Preservation Programs. Where the State Historic Preservation Officer has delegated the consultation responsibility for purposes of this section to a local government historic preservation program that has been certified in accordance with section 101(c) of the National Historic Preservation Act of 1966 (16 U.S.C. 470a (c)) and implementing regulations (36 CFR 61.5), the responsibility may be carried out by the appropriate local government body or official.

(3) Historic Preservation: Minimum Requirements:

(a) At least one accessible route complying with 4.3 from a site access point to an accessible entrance shall be provided.

EXCEPTION: A ramp with a slope no greater than 1:6 for a run not to exceed 2 ft (610 mm) may be used as part of an accessible route to an entrance.

(b) At least one accessible entrance complying with 4.14 which is used by the public shall be provided.

EXCEPTION: If it is determined that no entrance used by the public can comply with 4.14, then access at any entrance not used by the general public but open (unlocked) with directional signage at the primary entrance may be used. The accessible entrance shall also have a notification system. Where security is a problem, remote monitoring may be used.

(c) If toilets are provided, then at least one toilet facility complying with 4.22 and 4.1.6 shall be provided along an accessible route that complies with 4.3. Such toilet facility may be unisex in design.

(d) Accessible routes from an accessible entrance to all publicly used spaces on at least the level of the accessible entrance shall be provided. Access shall be provided to all levels of a building or facility in compliance with 4.1 whenever practical.

(e) Displays and written information, documents, etc., should be located where they can be seen by a seated person. Exhibits and signage displayed horizontally (e.g., open books), should be no higher than 44 in (1120 mm) above the floor surface.

NOTE: The technical provisions of sections 4.2 through 4.35 are the same as those of the American National Standard Institute's document A117.1-1980, except as noted in the text.

4.2 Space Allowance and Reach Ranges.

4.2.1* Wheelchair Passage Width. The minimum clear width for single wheelchair passage shall be 32 in (815 mm) at a point and 36 in (915 mm) continuously (see Fig. 1 and 24(e)).

4.2.2 Width for Wheelchair Passing. The minimum width for two wheelchairs to pass is 60 in (1525 mm) (see Fig. 2).

4.2.3* Wheelchair Turning Space. The space required for a wheelchair to make a 180-degree turn is a clear space of 60 in (1525 mm)

diameter (see Fig. 3(a)) or a T-shaped space (see Fig. 3(b)).

4.2.4* Clear Floor or Ground Space for Wheelchairs.

4.2.4.1 Size and Approach. The minimum clear floor or ground space required to accommodate a single, stationary wheelchair and occupant is 30 in by 48 in (760 mm by 1220 mm) (see Fig. 4(a)). The minimum clear floor or ground space for wheelchairs may be positioned for forward or parallel approach to an object (see Fig. 4(b) and (c)). Clear floor or ground space for wheelchairs may be part of the knee space required under some objects.

4.2.4.2 Relationship of Maneuvering Clearance to Wheelchair Spaces. One full unobstructed side of the clear floor or ground space for a wheelchair shall adjoin or overlap an accessible route or adjoin another wheelchair clear floor space. If a clear floor space is located in an alcove or otherwise confined on all or part of three sides, additional maneuvering clearances shall be provided as shown in Fig. 4(d) and (e).

4.2.4.3 Surfaces for Wheelchair Spaces. Clear floor or ground spaces for wheelchairs shall comply with 4.5.

4.2.5* Forward Reach. If the clear floor space only allows forward approach to an object, the maximum high forward reach allowed shall be 48 in (1220 mm) (see Fig. 5(a)). *The minimum low forward reach is 15 in (380 mm).* If the high forward reach is over an obstruction, reach and clearances shall be as shown in Fig. 5(b).

4.2.6* Side Reach. If the clear floor space allows parallel approach by a person in a wheelchair, the maximum high side reach allowed shall be 54 in (1370 mm) and the low side reach shall be no less than 9 in (230 mm) above the floor (Fig. 6(a) and (b)). If the side reach is over an obstruction, the reach and clearances shall be as shown in Fig 6(c).

4.3 Accessible Route.

4.3.1* General. All walks, halls, corridors, aisles, *skywalks, tunnels,* and other spaces

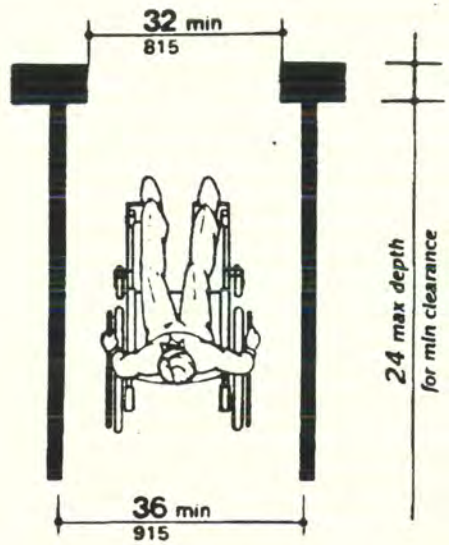

Fig. 1
Minimum Clear Width
for Single Wheelchair

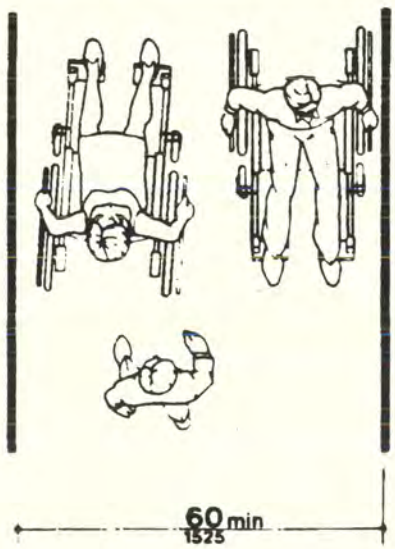

Fig. 2
Minimum Clear Width
for Two Wheelchairs

4.3 Accessible Route

that are part of an accessible route shall comply with 4.3.

4.3.2 Location.

(1) At least one accessible route *within the boundary of the site* shall be provided from public transportation stops, accessible parking, and accessible passenger loading zones, and public streets or sidewalks to the accessible building entrance they serve. *The accessible route shall, to the maximum extent feasible, coincide with the route for the general public.*

(2) At least one accessible route shall connect accessible buildings, facilities, elements, and spaces that are on the same site.

(3) At least one accessible route shall connect accessible building or facility entrances with all accessible spaces and elements and with all accessible dwelling units within the building or facility.

(4) An accessible route shall connect at least one accessible entrance of each accessible dwelling unit with those exterior and interior spaces and facilities that serve the accessible dwelling unit.

4.3.3 Width. The minimum clear width of an accessible route shall be 36 in (915 mm) except at doors (see 4.13.5 and 4.13.6). If a person in a wheelchair must make a turn around an obstruction, the minimum clear width of the accessible route shall be as shown in Fig. 7(a) and (b).

4.3.4 Passing Space. If an accessible route has less than 60 in (1525 mm) clear width, then passing spaces at least 60 in by 60 in (1525 mm by 1525 mm) shall be located at reasonable intervals not to exceed 200 ft (61 m). A T-intersection of two corridors or walks is an acceptable passing place.

4.3.5 Head Room. Accessible routes shall comply with 4.4.2.

4.3.6 Surface Textures. The surface of an accessible route shall comply with 4.5.

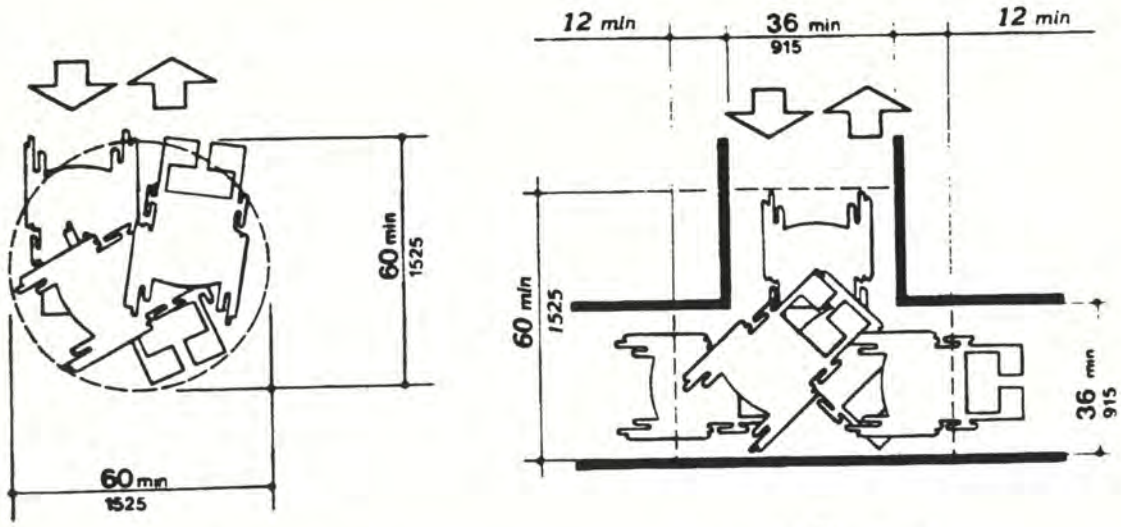

(a)
60-in (1525-mm)-Diameter Space

(b)
T-Shaped Space for 180° Turns

Fig. 3
Wheelchair Turning Space

4.3 Accessible Route

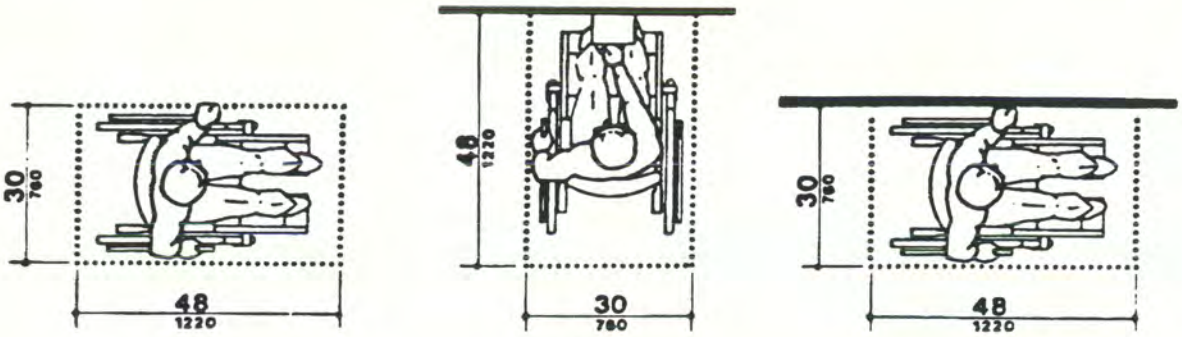

(a)
Clear Floor Space

(b)
Forward Approach

(c)
Parallel Approach

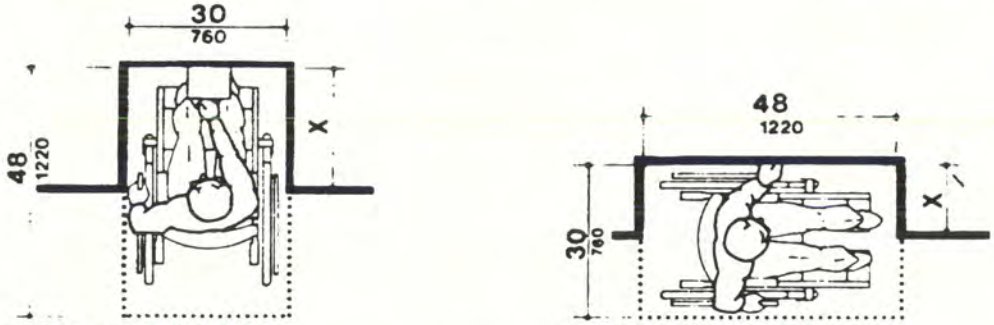

NOTE: x ≤ 24 in (610 mm)

NOTE: x ≤ 15 in (380 mm).

(d)
Clear Floor Space in Alcoves

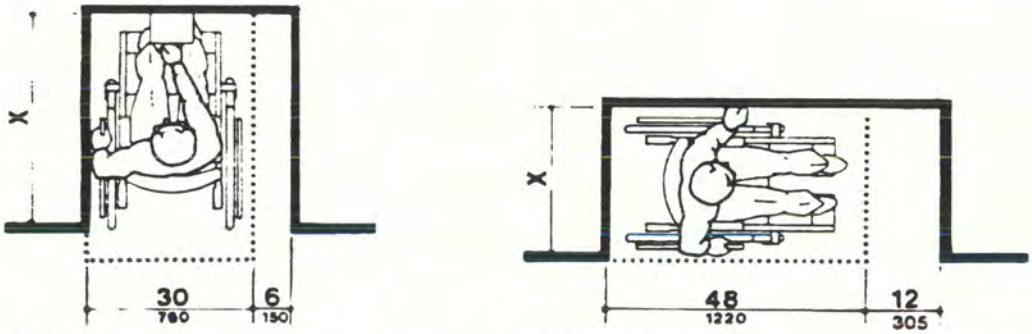

NOTE: If x > 24 in (610 mm), then an additional maneuvering clearance of 6 in (150 mm) shall be provided as shown.

NOTE: If x > 15 in (380 mm), then an additional maneuvering clearance of 12 in (305 mm) shall be provided as shown.

(e)
Additional Maneuvering Clearances for Alcoves

Fig. 4
Minimum Clear Floor Space for Wheelchairs

4.3 Accessible Route

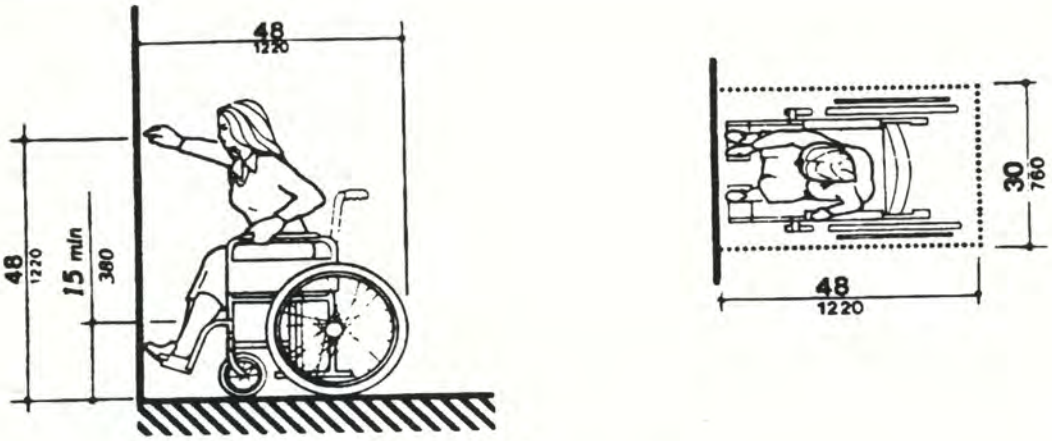

(a)
High Forward Reach Limit

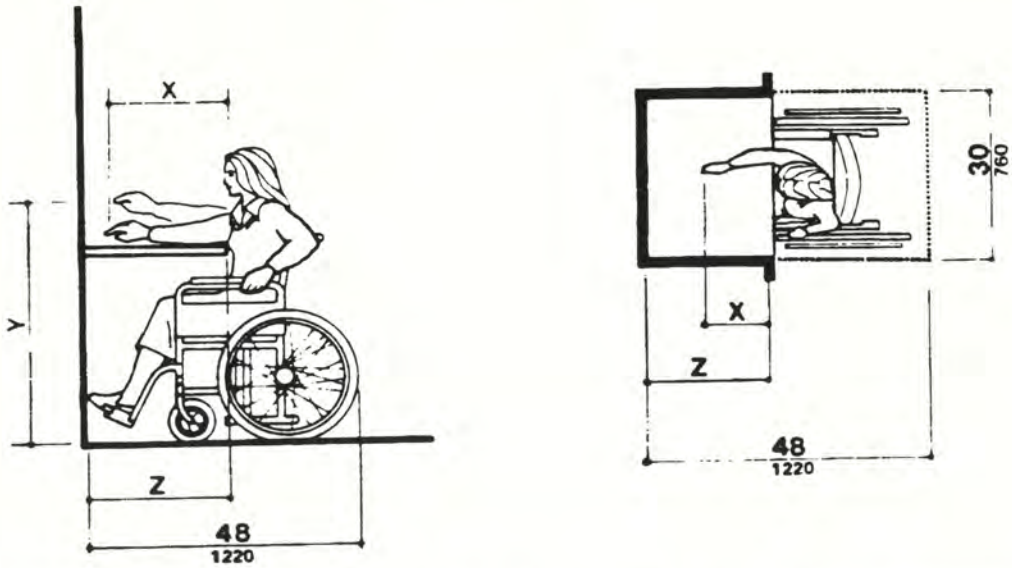

NOTE: x shall be ≤ 25 in (635 mm); z shall be ≥ x. When x < 20 in (510 mm), then y shall be 48 in (1220 mm) maximum. When x is 20 to 25 in (510 to 635 mm), then y shall be 44 in (1120 mm) maximum.

(b)
Maximum Forward Reach over an Obstruction

Fig. 5
Forward Reach

4.3.7 Slope

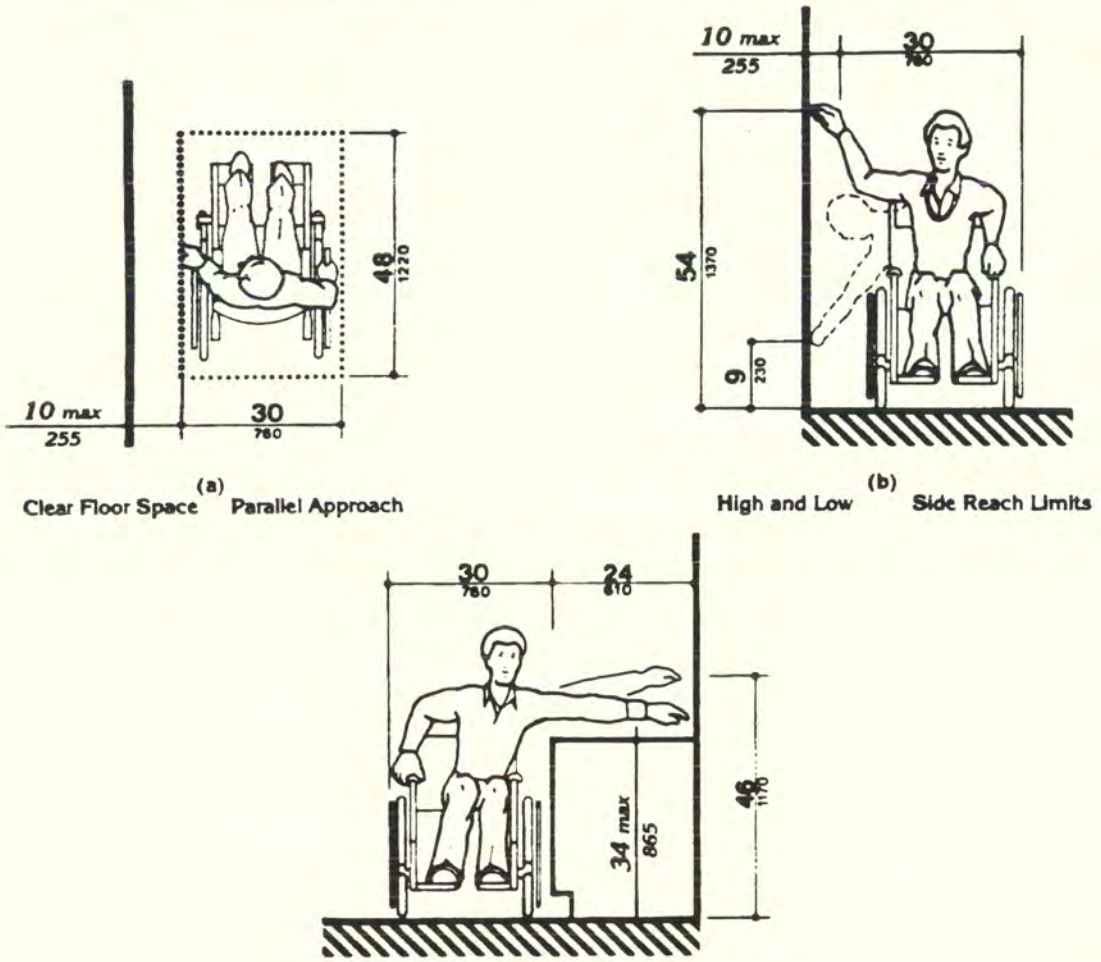

Fig. 6
Side Reach

4.3.7 Slope. An accessible route with a running slope greater than 1:20 is a ramp and shall comply with 4.8. Nowhere shall the cross slope of an accessible route exceed 1:50.

4.3.8 Changes in Levels. Changes in levels along an accessible route shall comply with 4.5.2. If an accessible route has changes in level greater than 1/2 in (13 mm), then a curb ramp, ramp, elevator, or platform lift *(as permitted in 4.1.3 and 4.1.6)* shall be provided that complies with 4.7, 4.8, 4.10, or 4.11, respectively. An accessible route does not include stairs, steps, or escalators. See definition of "egress, means of" in 3.5.

4.3.9 Doors. Doors along an accessible route shall comply with 4.13.

4.3.10* Egress

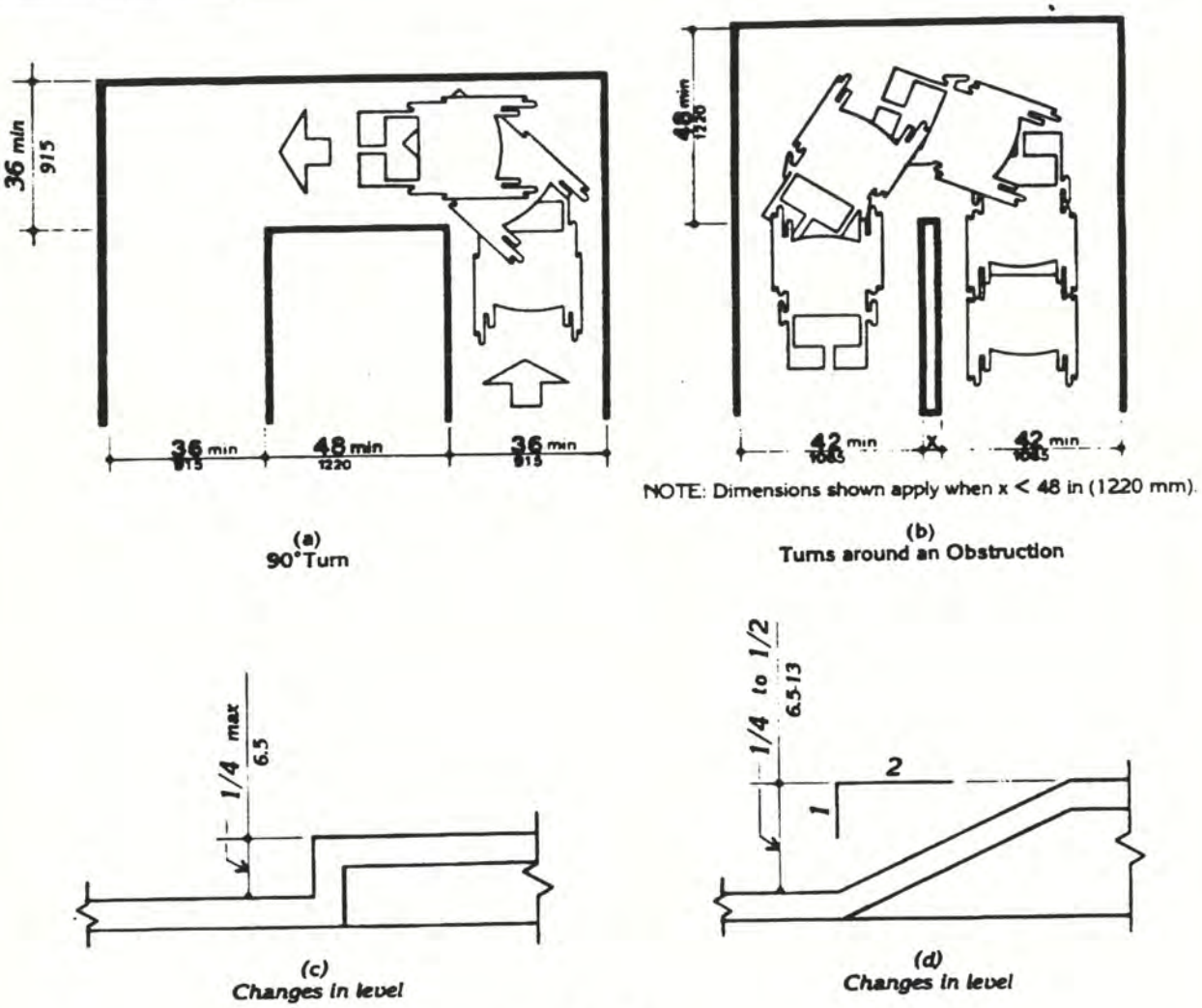

Fig. 7
Accessible Route

4.3.10* Egress. Accessible routes serving any accessible space or element shall also serve as a means of egress for emergencies or connect to an accessible area of *rescue assistance.*

4.3.11 Areas of Rescue Assistance.

4.3.11.1 Location and Construction. *An area of rescue assistance shall be one of the following:*

(1) A portion of a stairway landing within a smokeproof enclosure (complying with local requirements).

(2) A portion of an exterior exit balcony located immediately adjacent to an exit stairway when the balcony complies with local requirements for exterior exit balconies. Openings to the interior of the building located within 20 feet (6 m) of the

area of rescue assistance shall be protected with fire assemblies having a three-fourths hour fire protection rating.

(3) A portion of a one-hour fire-resistive corridor (complying with local requirements for fire-resistive construction and for openings) located immediately adjacent to an exit enclosure.

(4) A vestibule located immediately adjacent to an exit enclosure and constructed to the same fire-resistive standards as required for corridors and openings.

(5) A portion of a stairway landing within an exit enclosure which is vented to the exterior and is separated from the interior of the building with not less than one-hour fire-resistive doors.

(6) When approved by the appropriate local authority, an area or a room which is separated from other portions of the building by a smoke barrier. Smoke barriers shall have a fire-resistive rating of not less than one hour and shall completely enclose the area or room. Doors in the smoke barrier shall be tight-fitting smoke- and draft-control assemblies having a fire-protection rating of not less than 20 minutes and shall be self-closing or automatic closing. The area or room shall be provided with an exit directly to an exit enclosure. Where the room or area exits into an exit enclosure which is required to be of more than one-hour fire-resistive construction, the room or area shall have the same fire-resistive construction, including the same opening protection, as required for the adjacent exit enclosure.

(7) An elevator lobby when elevator shafts and adjacent lobbies are pressurized as required for smokeproof enclosures by local regulations and when complying with requirements herein for size, communication, and signage. Such pressurization system shall be activated by smoke detectors on each floor located in a manner approved by the appropriate local authority. Pressurization equipment and its duct work within the building shall be separated from other portions of the building by a minimum two-hour fire-resistive construction.

***4.3.11.2 Size.** Each area of rescue assistance shall provide at least two accessible areas each being not less than 30 inches by 48 inches (760 mm by 1220 mm). The area of rescue assistance shall not encroach on any required exit width. The total number of such 30-inch by 48-inch (760 mm by 1220 mm) areas per story shall be not less than one for every 200 persons of calculated occupant load served by the area of rescue assistance.*

EXCEPTION: The appropriate local authority may reduce the minimum number of 30-inch by 48-inch (760 mm by 1220 mm) areas to one for each area of rescue assistance on floors where the occupant load is less than 200.

***4.3.11.3* Stairway Width.** Each stairway adjacent to an area of rescue assistance shall have a minimum clear width of 48 inches between handrails.*

***4.3.11.4* Two-way Communication.** A method of two-way communication, with both visible and audible signals, shall be provided between each area of rescue assistance and the primary entry. The fire department or appropriate local authority may approve a location other than the primary entry.*

***4.3.11.5 Identification.** Each area of rescue assistance shall be identified by a sign which states "AREA OF RESCUE ASSISTANCE" and displays the international symbol of accessibility. The sign shall be illuminated when exit sign illumination is required. Signage shall also be installed at all inaccessible exits and where otherwise necessary to clearly indicate the direction to areas of rescue assistance. In each area of rescue assistance, instructions on the use of the area under emergency conditions shall be posted adjoining the two-way communication system.*

4.4 Protruding Objects.

4.4.1* General. Objects projecting from walls (for example, telephones) with their leading edges between 27 in and 80 in (685 mm and 2030 mm) above the finished floor shall protrude no more than 4 in (100 mm) into walks, halls, corridors, passageways, or aisles (see Fig. 8(a)). Objects mounted with their leading edges at or below 27 in (685 mm) above the finished floor may protrude any amount (see Fig. 8(a) and (b)). Free-standing objects mounted on posts or pylons may overhang 12 in (305 mm) maximum from 27 in to 80 in (685 mm to 2030 mm) above the ground or

4.4 Protruding Objects

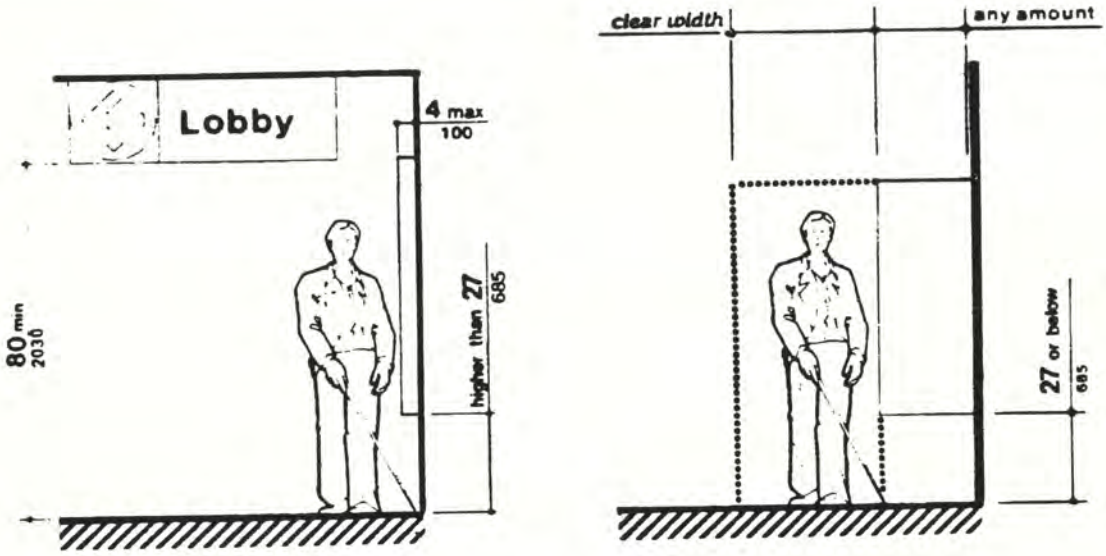

Fig. 8 (a)
Walking Parallel to a Wall

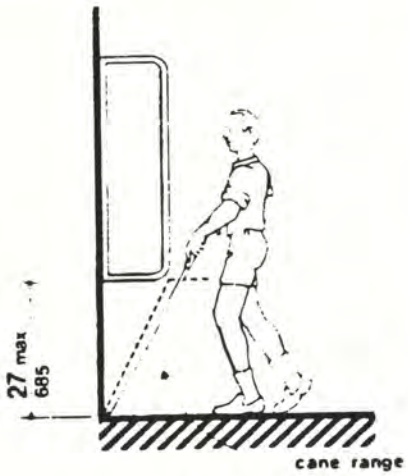

Fig. 8 (b)
Walking Perpendicular to a Wall

Fig. 8
Protruding Objects

finished floor (see Fig. 8(c) and (d)). Protruding objects shall not reduce the clear width of an accessible route or maneuvering space (see Fig. 8(e)).

4.4.2 Head Room. Walks, halls, corridors, passageways, aisles, or other circulation spaces shall have 80 in (2030 mm) minimum clear head room (see Fig. 8(a)). *If vertical clearance of an area adjoining an accessible route is reduced to less than 80 in (nominal dimension), a barrier to warn blind or visually-impaired persons shall be provided (see Fig. 8(c-1)).*

4.5 Ground and Floor Surfaces.

4.5.1* General. Ground and floor surfaces along accessible routes and in accessible rooms and spaces including floors, walks, ramps, stairs, and curb ramps, shall be stable, firm, slip-resistant, and shall comply with 4.5.

4.5.2 Changes in Level. Changes in level up to 1/4 in (6 mm) may be vertical and without edge treatment *(see Fig. 7(c))*. Changes in level between 1/4 in and 1/2 in (6 mm and 13 mm)

4.4 Protruding Objects

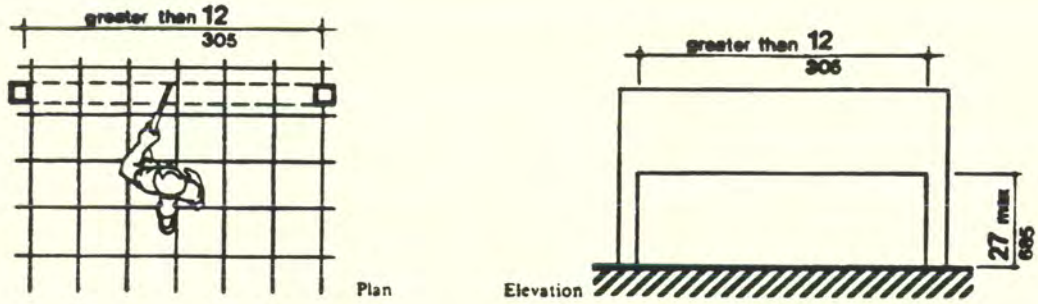

Fig. 8 (c) Free-Standing Overhanging Objects

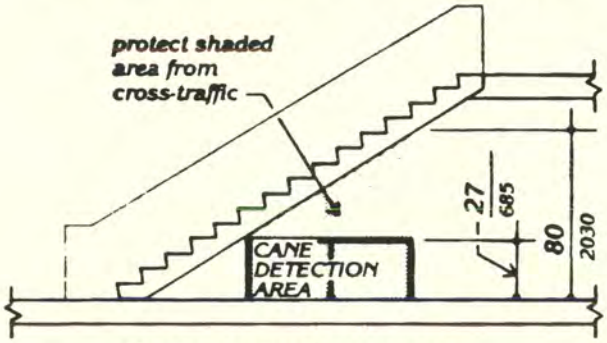

Fig. 8 (c-1) Overhead Hazards

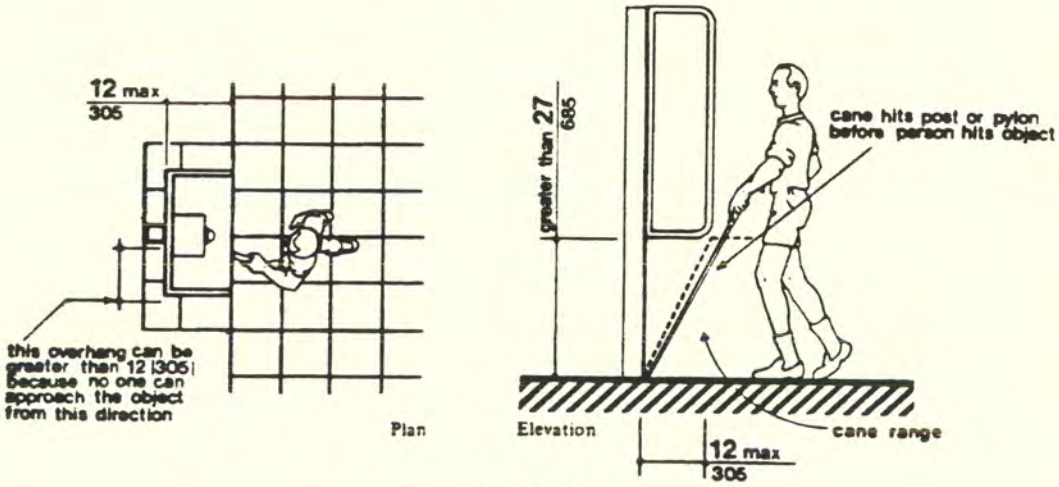

Fig. 8 (d)
Objects Mounted on Posts or Pylons

Fig. 8
Protruding Objects *(Continued)*

4.5 Ground and Floor Surfaces

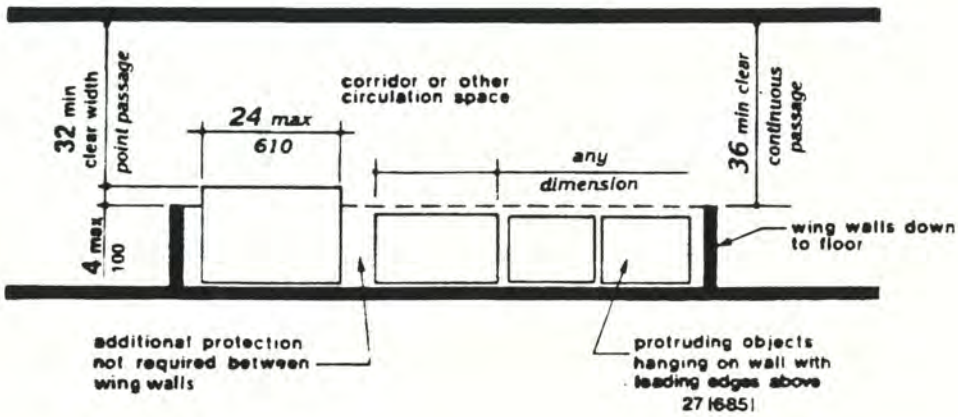

Fig. 8 (e)
Example of Protection around Wall-Mounted Objects and Measurements of Clear Widths

Fig. 8
Protruding Objects *(Continued)*

shall be beveled with a slope no greater than 1:2 *(see Fig. 7(d))*. Changes in level greater than 1/2 in (13 mm) shall be accomplished by means of a ramp that complies with 4.7 or 4.8.

4.5.3* Carpet. If carpet or carpet tile is used on a ground or floor surface, then it shall be securely attached; have a firm cushion, pad, or backing, or no cushion or pad; and have a level loop, textured loop, level cut pile, or level cut/uncut pile texture. The maximum pile *thickness* shall be 1/2 in (13 mm) (see Fig. 8(f)). Exposed edges of carpet shall be fastened to floor surfaces and have trim along the entire length of the exposed edge. Carpet edge trim shall comply with 4.5.2.

4.5.4 Gratings. If gratings are located in walking surfaces, then they shall have spaces no greater than 1/2 in (13 mm) wide in one direction *(see Fig. 8(g))*. If gratings have elongated openings, then they shall be placed so that the long dimension is perpendicular to the dominant direction of travel *(see Fig. 8(h))*.

4.6 Parking and Passenger Loading Zones.

4.6.1 Minimum Number. *Parking spaces required to be accessible by 4.1 shall comply with 4.6.2 through 4.6.5. Passenger loading zones required to be accessible by 4.1 shall comply with 4.6.5 and 4.6.6.*

4.6 Parking and Passenger Loading Zones

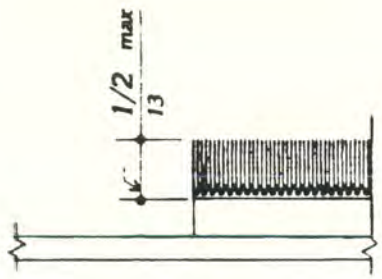

Fig. 8 (f)
Carpet Pile Thickness

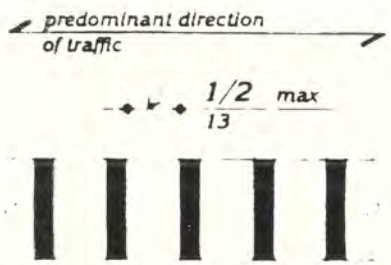

Fig. 8 (g)
Gratings

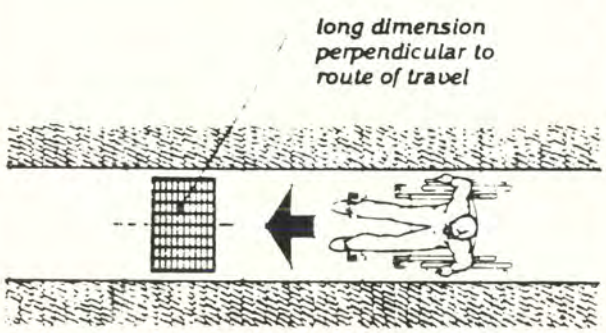

Fig. 8 (h)
Grating Orientation

4.6.2 Location. *Accessible parking spaces serving* a particular building shall be located on the shortest accessible route of travel *from adjacent parking* to an accessible entrance. *In parking facilities* that do not serve a particular building, *accessible parking* shall be located on the shortest accessible route *of travel* to an accessible pedestrian entrance of the parking facility. *In buildings with multiple accessible entrances with adjacent parking, accessible parking spaces shall be dispersed and located closest to the accessible entrances.*

4.6.3* Parking Spaces. *Accessible* parking spaces shall be at least 96 in (2440 mm) wide. Parking access aisles shall be part of an accessible route to the building or facility entrance and shall comply with 4.3. Two accessible parking spaces may share a common access aisle (see Fig. 9). Parked vehicle overhangs shall not reduce the clear width of an accessible route. *Parking spaces and access aisles shall be level with surface slopes not exceeding 1:50 (2%) in all directions.*

4.6.4* Signage. Accessible parking spaces shall be designated as reserved by a sign showing the symbol of accessibility (see 4.30.7). *Spaces complying with 4.1.2(5)(b) shall have an additional sign "Van-Accessible" mounted below the symbol of accessibility.* Such signs shall *be located so they cannot* be obscured by a vehicle parked in the space.

4.6.5* *Vertical Clearance.* *Provide minimum vertical clearance of 114 in (2895 mm) at accessible passenger loading zones and along at least one vehicle access route to such areas from site entrance(s) and exit(s). At parking spaces complying with 4.1.2(5)(b), provide minimum vertical clearance of 98 in (2490 mm) at the parking space and along at least one vehicle access route to such spaces from site entrance(s) and exit(s).*

4.6.6 Passenger Loading Zones. Passenger loading zones shall provide an access aisle at least *60 in (1525 mm)* wide and 20 ft *(240 in) (6100 mm)* long adjacent and parallel to the vehicle pull-up space (see Fig. 10). If there are curbs between the access aisle and the vehicle pull-up space, then a curb ramp complying with 4.7 shall be provided. *Vehicle standing spaces and access aisles shall be level with*

4.7 Curb Ramps

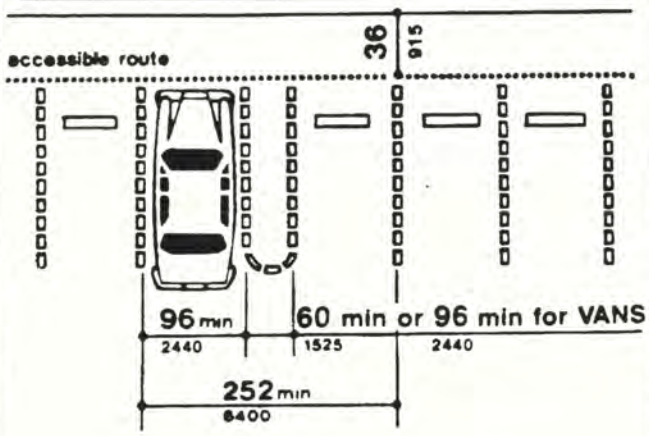

Fig. 9
Dimensions of Parking Spaces

surface slopes not exceeding 1:50 (2%) in all directions.

4.7 Curb Ramps.

4.7.1 Location. Curb ramps complying with 4.7 shall be provided wherever an accessible route crosses a curb.

4.7.2 Slope. Slopes of curb ramps shall comply with 4.8.2. The slope shall be measured as shown in Fig. 11. *Transitions from ramps to walks, gutters, or streets shall be flush and free of abrupt changes. Maximum slopes of adjoining gutters, road surface immediately adjacent to the curb ramp, or accessible route shall not exceed 1:20.*

4.7.3 Width. The minimum width of a curb ramp shall be 36 in (915 mm), exclusive of flared sides.

4.7.4 Surface. Surfaces of curb ramps shall comply with 4.5.

4.7.5 Sides of Curb Ramps. If a curb ramp is located where pedestrians must walk across the ramp, *or where it is not protected by handrails or guardrails*, it shall have flared sides; the maximum slope of the flare shall be 1:10 (see Fig. 12(a)). Curb ramps with returned curbs may be used where pedestrians would not normally walk across the ramp (see Fig. 12(b)).

4.7.6 Built-up Curb Ramps. Built-up curb ramps shall be located so that they do not project into vehicular traffic lanes (see Fig. 13).

4.7.7 *Detectable Warnings.* A curb ramp shall have a *detectable* warning complying with 4.29.2. *The detectable warning shall extend* the full width and depth of the curb ramp.

4.7.8 Obstructions. Curb ramps shall be located or protected to prevent their obstruction by parked vehicles.

4.7.9 Location at Marked Crossings. Curb ramps at marked crossings shall be wholly contained within the markings, excluding any flared sides (see Fig. 15).

4.7.10 Diagonal Curb Ramps. If diagonal (or corner type) curb ramps have returned curbs or other well-defined edges, such edges shall be parallel to the direction of pedestrian flow. The bottom of diagonal curb ramps shall have 48 in (1220 mm) minimum clear space as shown in Fig. 15(c) and (d). If diagonal curb ramps are provided at marked crossings, the 48 in (1220 mm) clear space shall be within the markings (see Fig. 15(c) and (d)). If diagonal curb ramps have flared sides, they shall also have at least a 24 in (610 mm) long segment of straight curb located on each side of the curb ramp and within the marked crossing (see Fig. 15(c)).

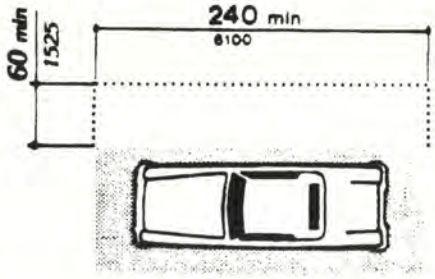

Fig. 10
Access Aisle at Passenger Loading Zones

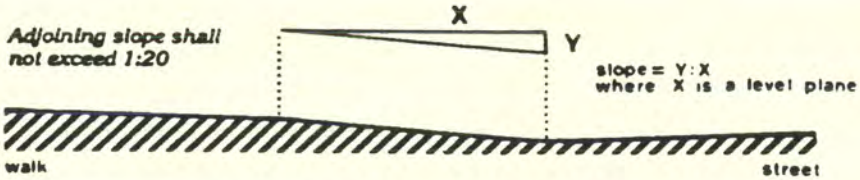

Fig. 11
Measurement of Curb Ramp Slopes

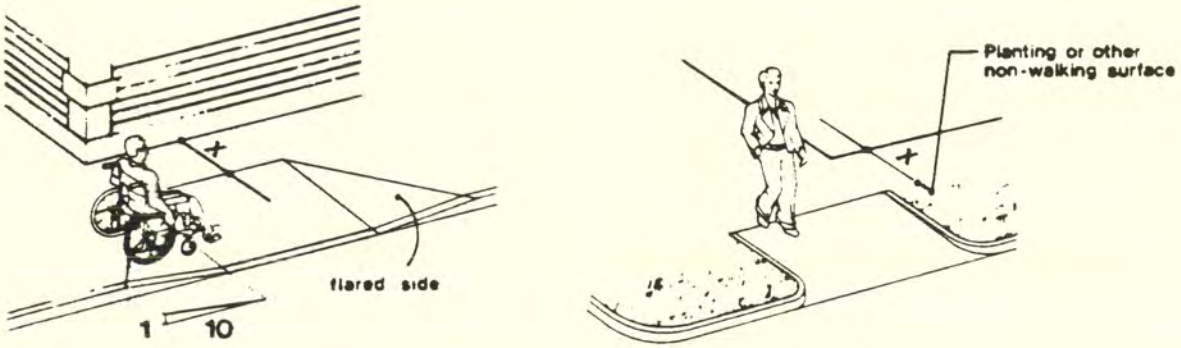

(a)
Flared Sides

(b)
Returned Curb

If X is less than 48 in, then the slope of the flared side shall not exceed 1:12.

Fig. 12
Sides of Curb Ramps

4.7.11 Islands. Any raised islands in crossings shall be cut through level with the street or have curb ramps at both sides and a level area at least 48 in (1220 mm) long between the curb ramps in the part of the island intersected by the crossings (see Fig. 15(a) and (b)).

4.8 Ramps.

4.8.1* General. Any part of an accessible route with a slope greater than 1:20 shall be considered a ramp and shall comply with 4.8.

4.8.2* Slope and Rise. The least possible slope shall be used for any ramp. The maximum slope of a ramp in new construction shall be 1:12. The maximum rise for any run shall be 30 in (760 mm) (see Fig. 16). Curb ramps and ramps to be constructed on existing sites or in existing buildings or facilities may have slopes and rises as *allowed in 4.1.6(3)(a)* if space limitations prohibit the use of a 1:12 slope or less.

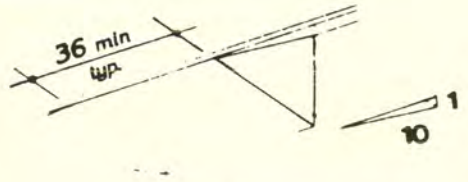

Fig. 13
Built-Up Curb Ramp

4.8 Ramps

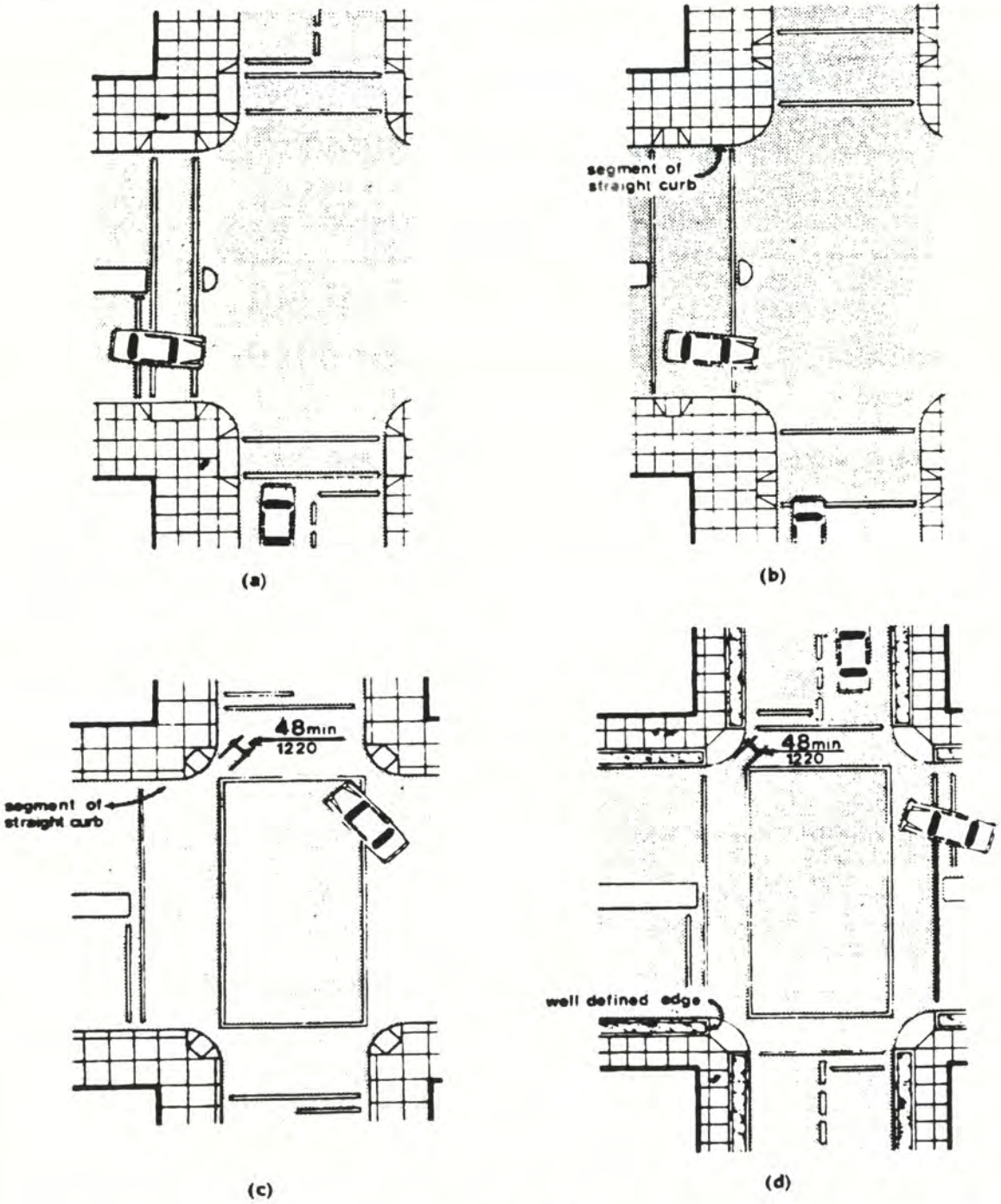

Fig. 15
Curb Ramps at Marked Crossings

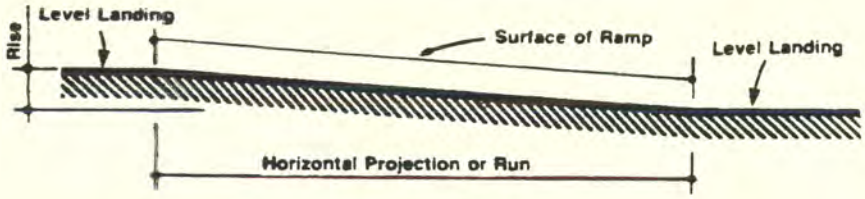

	Maximum Rise		Maximum Horizontal Projection	
Slope	in	mm	ft	m
1:12 to < 1:16	30	760	30	9
1:16 to < 1:20	30	760	40	12

Fig. 16
Components of a Single Ramp Run and Sample Ramp Dimensions

4.8.3 Clear Width. The minimum clear width of a ramp shall be 36 in (915 mm).

4.8.4* Landings. Ramps shall have level landings at bottom and top of *each ramp and* each *ramp* run. Landings shall have the following features:

(1) The landing shall be at least as wide as the ramp run leading to it.

(2) The landing length shall be a minimum of 60 in (1525 mm) clear.

(3) If ramps change direction at landings, the minimum landing size shall be 60 in by 60 in (1525 mm by 1525 mm).

(4) If a doorway is located at a landing, then the area in front of the doorway shall comply with 4.13.6.

4.8.5* Handrails. If a ramp run has a rise greater than 6 in (150 mm) or a horizontal projection greater than 72 in (1830 mm), then it shall have handrails on both sides. Handrails are not required on curb ramps *or adjacent to seating in assembly areas.* Handrails shall comply with 4.26 and shall have the following features:

(1) Handrails shall be provided along both sides of ramp segments. The inside handrail on switchback or dogleg ramps shall always be continuous.

(2) If handrails are not continuous, they shall extend at least 12 in (305 mm) beyond the top and bottom of the ramp segment and shall be parallel with the floor or ground surface (see Fig. 17).

(3) The clear space between the handrail and the wall shall be 1 - 1/2 in (38 mm).

(4) Gripping surfaces shall be continuous.

(5) Top of handrail gripping surfaces shall be mounted between 34 in and 38 in (865 mm and 965 mm) above ramp surfaces.

(6) Ends of handrails shall be either rounded or returned smoothly to floor, wall, or post.

(7) Handrails shall not rotate within their fittings.

4.8.6 Cross Slope and Surfaces. The cross slope of ramp surfaces shall be no greater than 1:50. Ramp surfaces shall comply with 4.5.

4.9 Stairs

4.8.7 Edge Protection. Ramps and landings with drop-offs shall have curbs, walls, railings, or projecting surfaces that prevent people from slipping off the ramp. Curbs shall be a minimum of 2 in (50 mm) high (see Fig. 17).

4.8.8 Outdoor Conditions. Outdoor ramps and their approaches shall be designed so that water will not accumulate on walking surfaces.

4.9 Stairs.

4.9.1* Minimum Number. *Stairs required to be accessible by 4.1 shall comply with 4.9.*

4.9.2 Treads and Risers. On any given flight of stairs, all steps shall have uniform riser heights and uniform tread widths. Stair treads shall be no less than 11 in (280 mm) wide, measured from riser to riser (see Fig. 18(a)). *Open risers are not permitted.*

4.9.3 Nosings. The undersides of nosings shall not be abrupt. The radius of curvature at the leading edge of the tread shall be no greater than 1/2 in (13 mm). Risers shall be sloped or the underside of the nosing shall have an angle not less than 60 degrees from the horizontal. Nosings shall project no more than 1-1/2 in (38 mm) (see Fig. 18).

4.9.4 Handrails. Stairways shall have handrails at both sides of all stairs. Handrails shall comply with 4.26 and shall have the following features:

(1) Handrails shall be continuous along both sides of stairs. The inside handrail on switchback or dogleg stairs shall always be continuous (see Fig. 19(a) and (b)).

(2) If handrails are not continuous, they shall extend at least 12 in (305 mm) beyond the top riser and at least 12 in (305 mm) plus the width of one tread beyond the bottom riser. At the top, the extension shall be parallel with the floor or ground surface. At the bottom, the handrail shall continue to slope for a distance of the width of one tread from the bottom riser; the remainder of the extension shall be horizontal (see Fig. 19(c) and (d)). Handrail extensions shall comply with 4.4.

(3) The clear space between handrails and wall shall be 1-1/2 in (38 mm).

(4) Gripping surfaces shall be uninterrupted by newel posts, other construction elements, or obstructions.

(5) Top of handrail gripping surface shall be mounted between 34 in and 38 in (865 mm and 965 mm) above stair nosings.

(6) Ends of handrails shall be either rounded or returned smoothly to floor, wall or post.

(7) Handrails shall not rotate within their fittings.

4.9.5 *Detectable* Warnings at Stairs. *(Reserved).*

4.9.6 Outdoor Conditions. Outdoor stairs and their approaches shall be designed so that water will not accumulate on walking surfaces.

4.10 Elevators.

4.10.1 General. *Accessible* elevators shall be on an accessible route and shall comply with 4.10 and with the *ASME A17.1-1990*, Safety Code for Elevators and Escalators. *Freight elevators shall not be considered as meeting the requirements of this section unless the only elevators provided are used as combination passenger and freight elevators for the public and employees.*

4.10.2 Automatic Operation. Elevator operation shall be automatic. Each car shall be equipped with a self-leveling feature that will automatically bring the car to floor landings within a tolerance of 1/2 in (13 mm) under rated loading to zero loading conditions. This self-leveling feature shall be automatic and independent of the operating device and shall correct the overtravel or undertravel.

4.10.3 Hall Call Buttons. Call buttons in elevator lobbies and halls shall be centered at 42 in (1065 mm) above the floor. Such call buttons shall have visual signals to indicate when each call is registered and when each call is answered. Call buttons shall be a minimum of 3/4 in (19 mm) in the smallest dimension. The button designating the up direction shall be on top. (See Fig. 20.) *Buttons shall be raised or flush. Objects mounted beneath hall call buttons shall not project into the elevator lobby more than 4 in (100 mm).*

4.10 Elevators

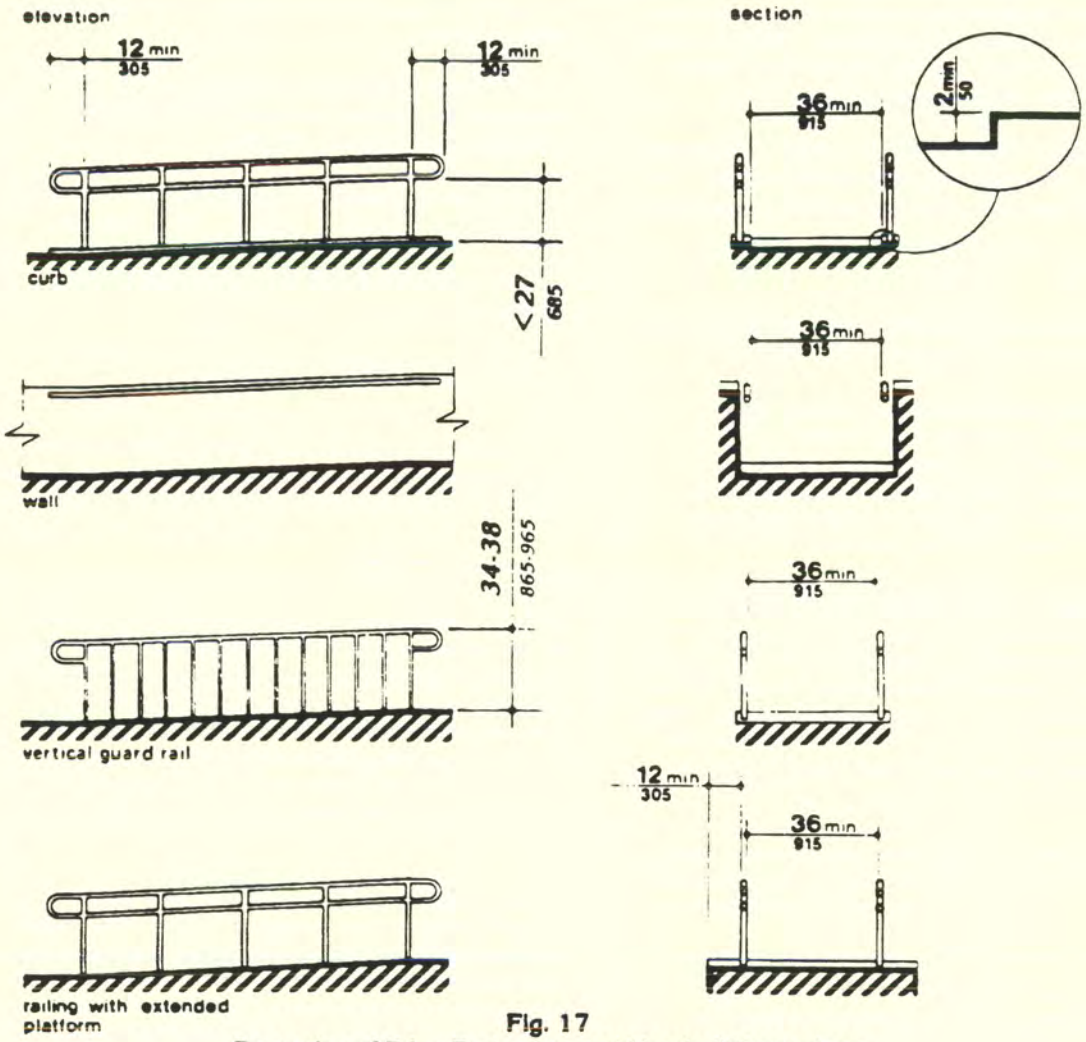

Fig. 17
Examples of Edge Protection and Handrail Extensions

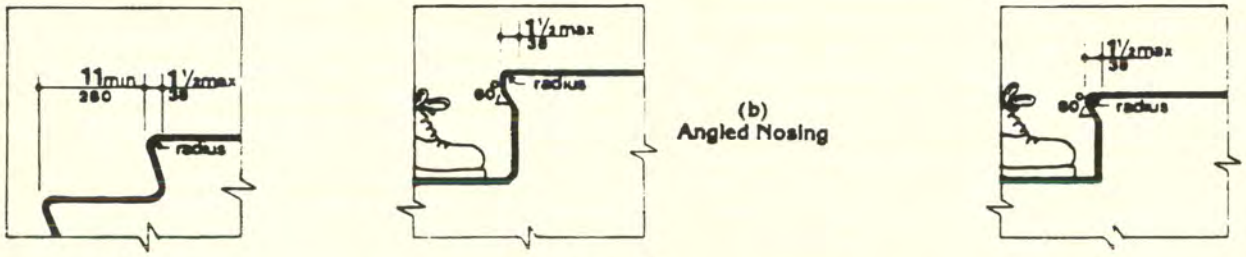

(a)
Flush Riser

(b)
Angled Nosing

(c)
Rounded Nosing

Fig. 18
Usable Tread Width and Examples of Acceptable Nosings

4.10 Elevators

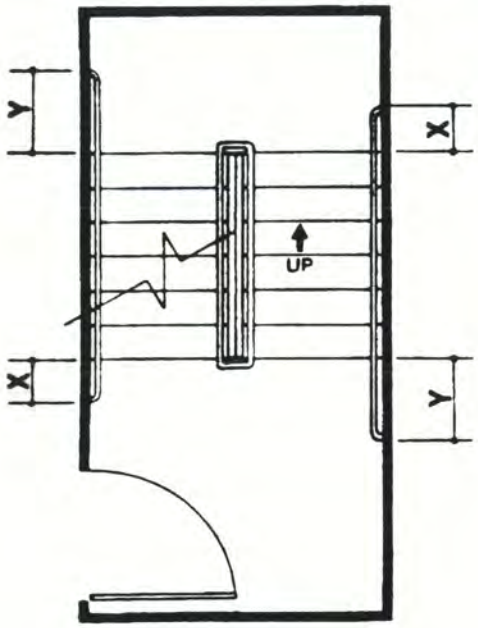

(a)
Plan

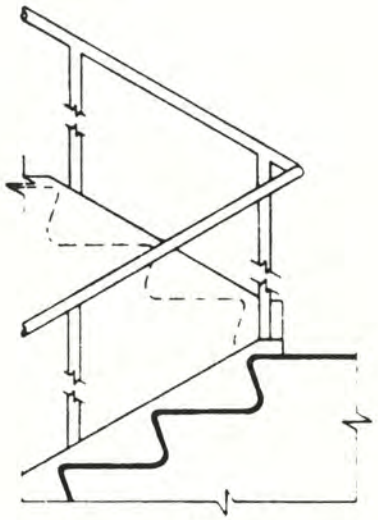

(b)
Elevation of Center Handrail

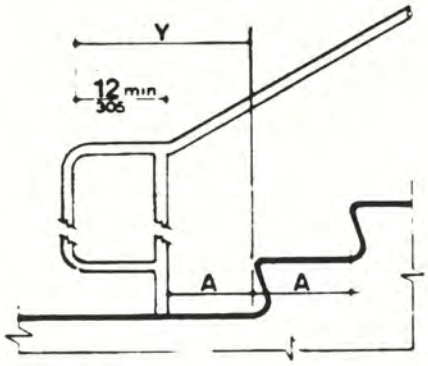

(c)
Extension at Bottom of Run

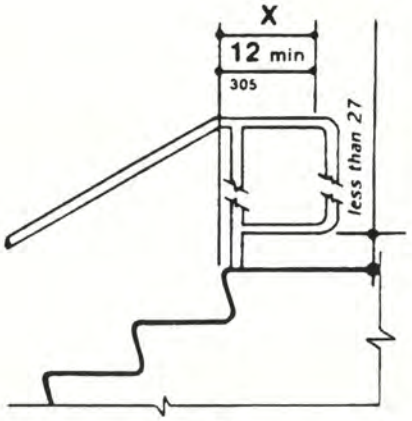

(d)
Extension at Top of Run

NOTE:

X is the 12 in minimum handrail extension required at each top riser.

Y is the minimum handrail extension of 12 in plus the width of one tread that is required at each bottom riser.

Fig. 19
Stair Handrails

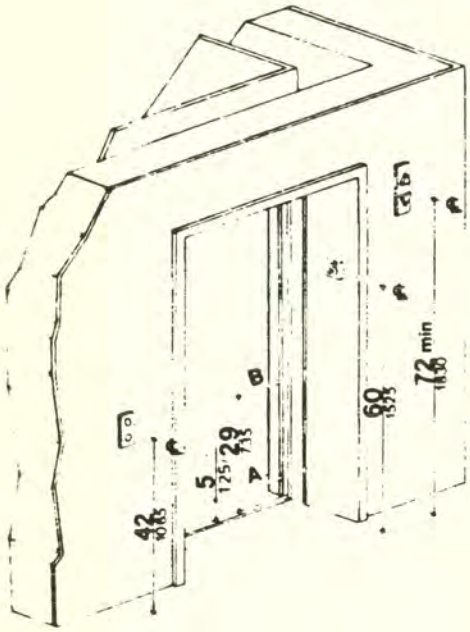

NOTE. The automatic door reopening device is activated if an object passes through either line A or line B. Line A and line B represent the vertical locations of the door reopening device not requiring contact.

Fig. 20
Hoistway and Elevator Entrances

4.10.4 Hall Lanterns. A visible and audible signal shall be provided at each hoistway entrance to indicate which car is answering a call. Audible signals shall sound once for the up direction and twice for the down direction or shall have verbal annunciators that say "up" or "down." Visible signals shall have the following features:

(1) Hall lantern fixtures shall be mounted so that their centerline is at least 72 in (1830 mm) above the lobby floor. (See Fig. 20.)

(2) Visual elements shall be at least 2-1/2 in (64 mm) in the smallest dimension.

(3) Signals shall be visible from the vicinity of the hall call button (see Fig. 20). In-car lanterns located in cars, visible from the vicinity of hall call buttons, and conforming to the above requirements, shall be acceptable.

4.10.5 *Raised and Braille* Characters on Hoistway Entrances. All elevator hoistway entrances shall have *raised and Braille* floor designations provided on both jambs. The centerline of the characters shall be 60 in (1525 mm) *above finish* floor. Such characters shall be 2 in (50 mm) high and shall comply with 4.30.4. Permanently applied plates are acceptable if they are permanently fixed to the jambs. (See Fig. 20).

4.10.6* Door Protective and Reopening Device. Elevator doors shall open and close automatically. They shall be provided with a reopening device that will stop and reopen a car door and hoistway door automatically if the door becomes obstructed by an object or person. The device shall be capable of completing these operations without requiring contact for an obstruction passing through the opening at heights of 5 in and 29 in (125 mm and 735 mm) above finish floor (see Fig. 20). Door reopening devices shall remain effective for at least 20 seconds. After such an interval, doors may close in accordance with the requirements of *ASME A17.1-1990.*

4.10.7* Door and Signal Timing for Hall Calls. The minimum acceptable time from notification that a car is answering a call until the doors of that car start to close shall be calculated from the following equation:

$$T = D/(1.5\ ft/s) \text{ or } T = D/(445\ mm/s)$$

where T total time in seconds and D distance (in feet or millimeters) from a point in the lobby or corridor 60 in (1525 mm) directly in front of the farthest call button controlling that car to the centerline of its hoistway door (see Fig. 21). For cars with in-car lanterns, T begins when the lantern is visible from the vicinity of hall call buttons and an audible signal is sounded. *The minimum acceptable notification time shall be 5 seconds.*

4.10.8 Door Delay for Car Calls. The minimum time for elevator doors to remain fully open in response to a car call shall be 3 seconds.

4.10.9 Floor Plan of Elevator Cars. The floor area of elevator cars shall provide space for wheelchair users to enter the car, maneuver

4.10.12 Car Controls

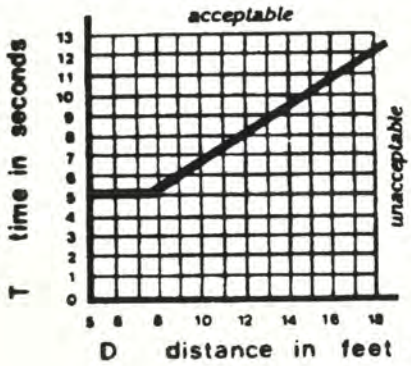

Fig. 21
Graph of Timing Equation

within reach of controls, and exit from the car. Acceptable door opening and inside dimensions shall be as shown in Fig. 22. The clearance between the car platform sill and the edge of any hoistway landing shall be no greater than 1-1/4 in (32 mm).

4.10.10 Floor Surfaces. Floor surfaces shall comply with 4.5.

4.10.11 Illumination Levels. The level of illumination at the car controls, platform, and car threshold and landing sill shall be at least 5 footcandles (53.8 lux).

4.10.12* Car Controls. Elevator control panels shall have the following features:

(1) Buttons. All control buttons shall be at least 3/4 in (19 mm) in their smallest dimension. They *shall* be *raised* or flush.

(2) Tactile, *Braille*, and Visual Control Indicators. All control buttons shall be designated by *Braille and by raised* standard alphabet characters for letters, arabic characters for numerals, or standard symbols as shown in Fig. 23(a), and as required in *ASME A17.1-1990. Raised and Braille* characters and symbols shall comply with 4.30. The call button for the main entry floor shall be designated by a *raised* star at the left of the floor designation (see Fig. 23(a)). All raised designations for control buttons shall be placed immediately to the left of the button to which they apply. Applied plates,

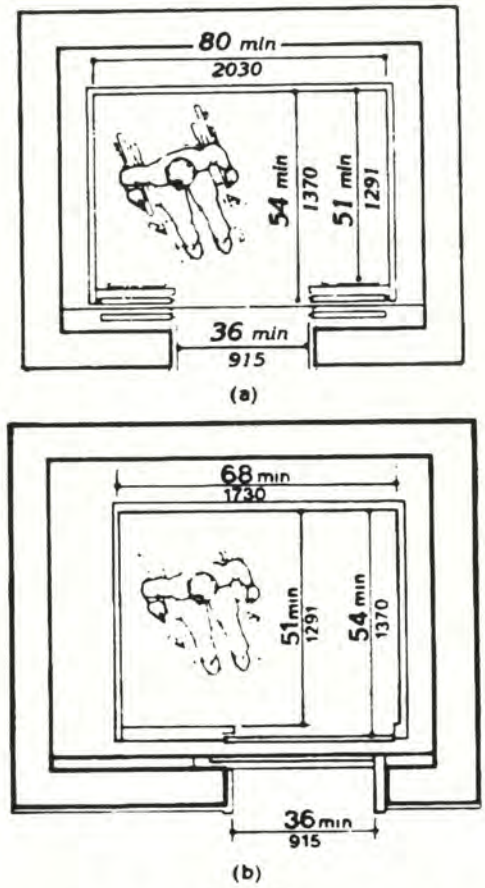

Fig. 22
Minimum Dimensions of Elevator Cars

permanently attached, are an acceptable means to provide raised control designations. Floor buttons shall be provided with visual indicators to show when each call is registered. The visual indicators shall be extinguished when each call is answered.

(3) Height. All floor buttons shall be no higher than 54 in (1370 mm) above the *finish floor for side approach and 48 in (1220 mm) for front approach.* Emergency controls, including the emergency alarm and emergency stop, shall be grouped at the bottom of the panel and shall have their centerlines no less than 35 in (890 mm) above the finish floor (see Fig. 23(a) and (b)).

4.10.13* Car Position Indicators

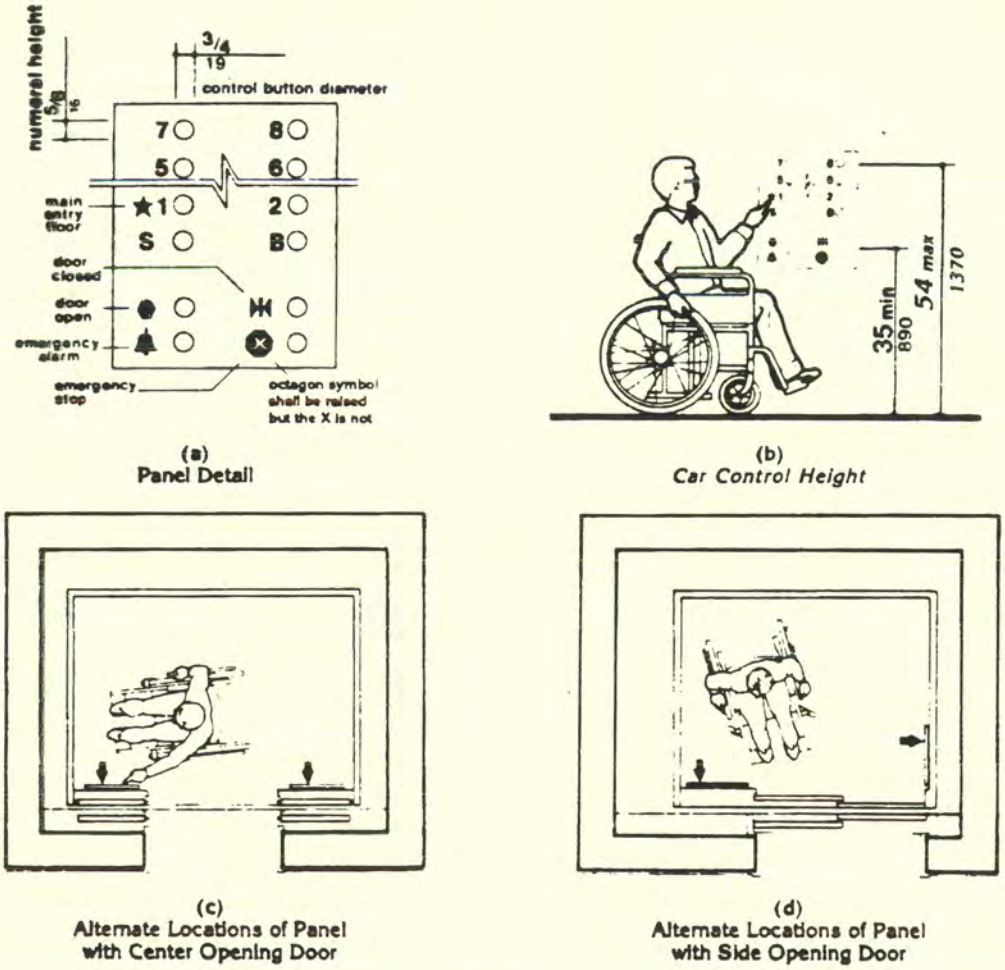

(a)
Panel Detail

(b)
Car Control Height

(c)
Alternate Locations of Panel with Center Opening Door

(d)
Alternate Locations of Panel with Side Opening Door

Fig. 23
Car Controls

(4) Location. Controls shall be located on a front wall if cars have center opening doors, and at the side wall or at the front wall next to the door if cars have side opening doors (see Fig. 23(c) and (d)).

4.10.13* Car Position Indicators. In elevator cars, a visual car position indicator shall be provided above the car control panel or over the door to show the position of the elevator in the hoistway. As the car passes or stops at a floor served by the elevators, the corresponding numerals shall illuminate, and an audible signal shall sound. Numerals shall be a minimum of 1/2 in (13 mm) high. The audible signal shall be no less than 20 decibels with a frequency no higher than 1500 Hz. An automatic verbal announcement of the floor number at which a car stops or which a car passes may be substituted for the audible signal.

4.10.14* Emergency Communications. If provided, emergency two-way communication systems between the elevator and a point outside the hoistway shall comply with *ASME*

4.11 Platform Lifts *(Wheelchair Lifts)*

A17.1-1990. The highest operable part of a two-way communication system shall be a maximum of *48 in (1220 mm)* from the floor of the car. It shall be identified by a raised symbol and lettering complying with 4.30 and located adjacent to the device. If the system uses a handset then the length of the cord from the panel to the handset shall be at least 29 in (735 mm). *If the system is located in a closed compartment the compartment door hardware shall conform to 4.27, Controls and Operating Mechanisms. The emergency intercommunication system shall not require voice communication.*

4.11 Platform Lifts *(Wheelchair Lifts).*

4.11.1 Location. *Platform lifts (wheelchair lifts) permitted by 4.1 shall comply with the requirements of 4.11.*

4.11.2* Other Requirements. If platform lifts *(wheelchair lifts)* are used, they shall comply with 4.2.4, 4.5, 4.27, and *ASME A17.1 Safety Code for Elevators and Escalators, Section XX, 1990.*

4.11.3 Entrance. *If platform lifts are used then they shall facilitate unassisted entry, operation, and exit from the lift in compliance with 4.11.2.*

4.12 Windows.

4.12.1* General. *(Reserved).*

4.12.2* Window Hardware. *(Reserved).*

4.13 Doors.

4.13.1 General. *Doors required to be accessible by 4.1* shall comply with the requirements of 4.13.

4.13.2 Revolving Doors and Turnstiles. Revolving doors or turnstiles shall not be the only means of passage at an accessible entrance or along an accessible route. *An accessible gate or door shall be provided adjacent to the turnstile or revolving door and shall be so designed as to facilitate the same use pattern.*

4.13.3 Gates. Gates, including ticket gates, shall meet all applicable specifications of 4.13.

4.13.4 Double-Leaf Doorways. If doorways have two *independently operated* door leaves, then at least one leaf shall meet the specifications in 4.13.5 and 4.13.6. That leaf shall be an active leaf.

4.13.5 Clear Width. Doorways shall have a minimum clear opening of 32 in (815 mm) with the door open 90 degrees, measured between the face of the door and the *opposite* stop (see Fig. 24(a), (b), (c), and (d)). Openings more than 24 in (610 mm) in depth shall comply with 4.2.1 and 4.3.3 (see Fig. 24(e)).

EXCEPTION: Doors not requiring full user passage, such as shallow closets, may have the clear opening reduced to 20 in (510 mm) minimum.

4.13.6 Maneuvering Clearances at Doors. Minimum maneuvering clearances at doors that are not automatic or power-assisted shall be as shown in Fig. 25. The floor or ground area within the required clearances shall be level and clear.

EXCEPTION: Entry doors to acute care hospital bedrooms for in-patients shall be exempted from the requirement for space at the latch side of the door (see dimension "x" in Fig. 25) if the door is at least 44 in (1120 mm) wide.

4.13.7 Two Doors in Series. The minimum space between two hinged or pivoted doors in series shall be 48 in (1220 mm) plus the width of any door swinging into the space. Doors in series shall swing either in the same direction or away from the space between the doors (see Fig. 26).

4.13.8* Thresholds at Doorways. Thresholds at doorways shall not exceed 3/4 in (19 mm) in height for exterior sliding doors or 1/2 in (13 mm) for other types of doors. Raised thresholds and floor level changes at accessible doorways shall be beveled with a slope no greater than 1:2 (see 4.5.2).

4.13.9* Door Hardware. Handles, pulls, latches, locks, and other operating devices on accessible doors shall have a shape that is easy

4.13 Doors

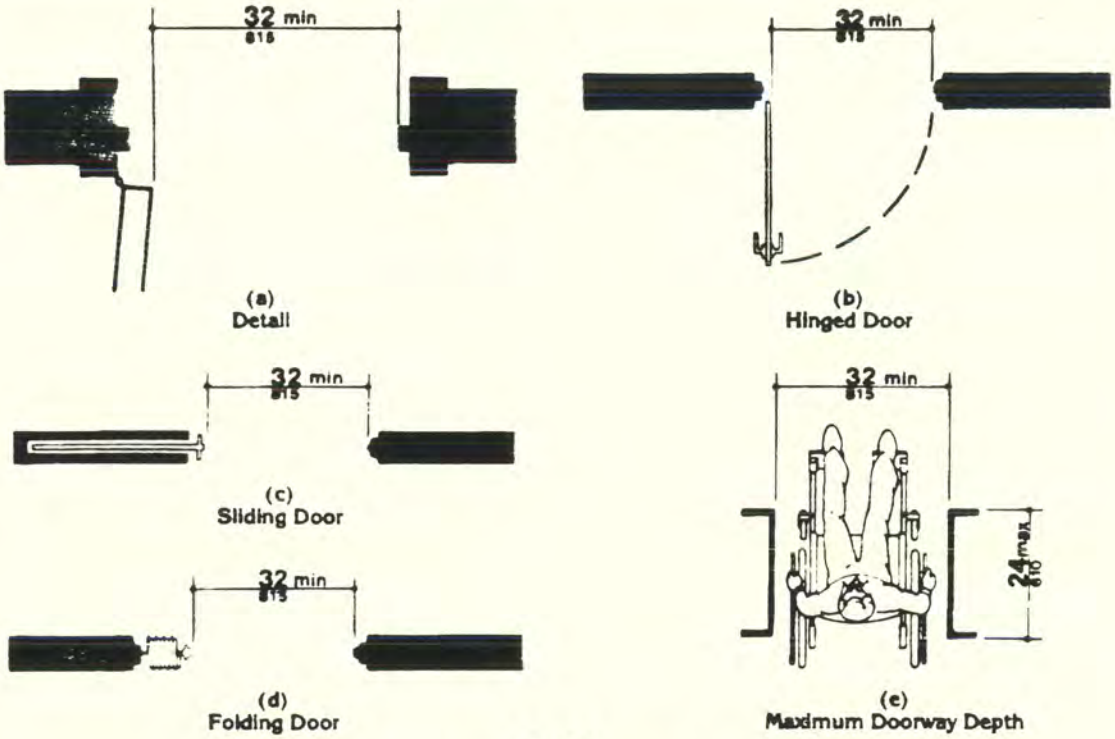

Fig. 24
Clear Doorway Width and Depth

to grasp with one hand and does not require tight grasping, tight pinching, or twisting of the wrist to operate. Lever-operated mechanisms, push-type mechanisms, and U-shaped handles are acceptable designs. When sliding doors are fully open, operating hardware shall be exposed and usable from both sides. *Hardware required for accessible door passage shall be mounted no higher than 48 in (1220 mm) above finished floor.*

4.13.10* Door Closers. If a door has a closer, then the sweep period of the closer shall be adjusted so that from an open position of 70 degrees, the door will take at least 3 seconds to move to a point 3 in (75 mm) from the latch, measured to the leading edge of the door.

4.13.11* Door Opening Force. The maximum force for pushing or pulling open a door shall be as follows:

(1) Fire doors shall have the minimum opening force allowable by the appropriate administrative authority.

(2) Other doors.

(a) exterior hinged doors: *(Reserved).*

(b) interior hinged doors: 5 lbf (22.2N)

(c) sliding or folding doors: 5 lbf (22.2N)

These forces do not apply to the force required to retract latch bolts or disengage other devices that may hold the door in a closed position.

4.13 Doors

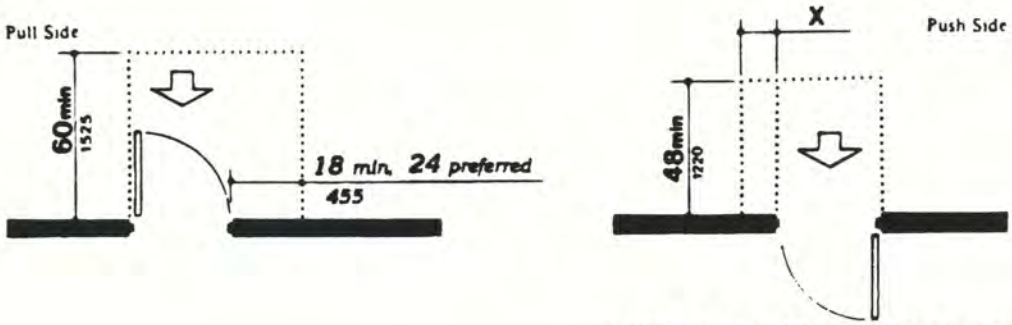

NOTE: x = 12 in (305 mm) if door has both a closer and latch.

(a)
Front Approaches — Swinging Doors

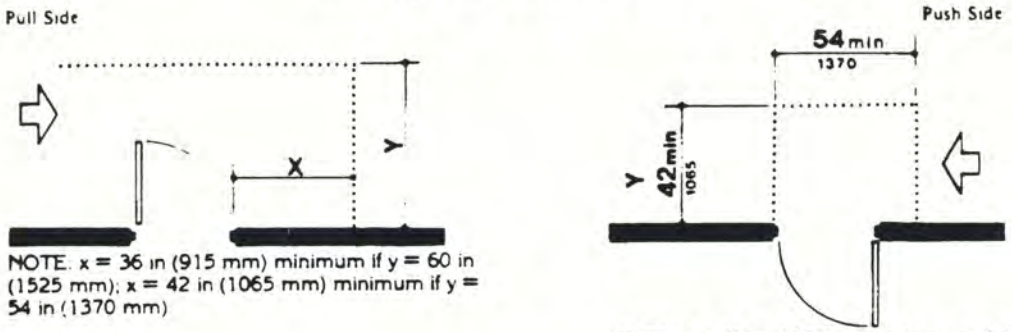

NOTE: x = 36 in (915 mm) minimum if y = 60 in (1525 mm); x = 42 in (1065 mm) minimum if y = 54 in (1370 mm).

NOTE: y = 48 in (1220 mm) minimum if door has both a latch and closer.

(b)
Hinge Side Approaches — Swinging Doors

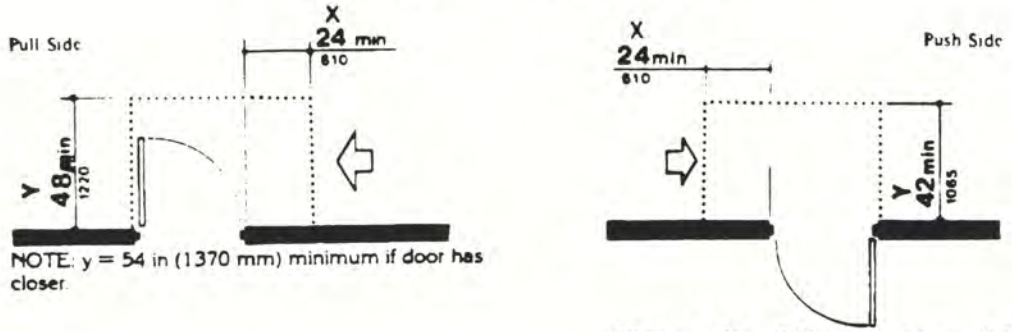

NOTE: y = 54 in (1370 mm) minimum if door has closer.

NOTE: y = 48 in (1220 mm) minimum if door has closer.

(c)
Latch Side Approaches — Swinging Doors

NOTE: All doors in alcoves shall comply with the clearances for front approaches.

Fig. 25
Maneuvering Clearances at Doors

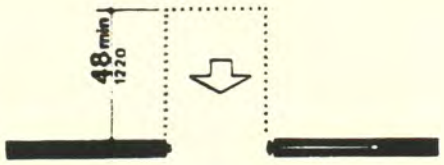

(d)
Front Approach — Sliding Doors *and Folding Doors*

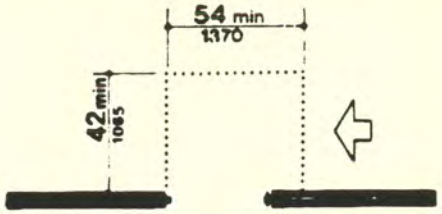

(e)
Slide Side Approach — Sliding Doors *and Folding Doors*

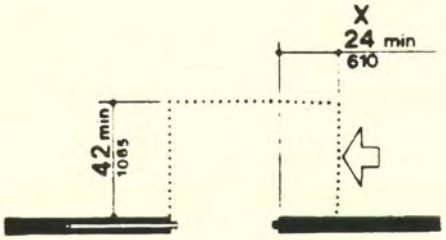

(f)
Latch Side Approach — Sliding Doors *and Folding Doors*

NOTE: All doors in alcoves shall comply with the clearances for front approaches.

Fig. 25
Maneuvering Clearances at Doors *(Continued)*

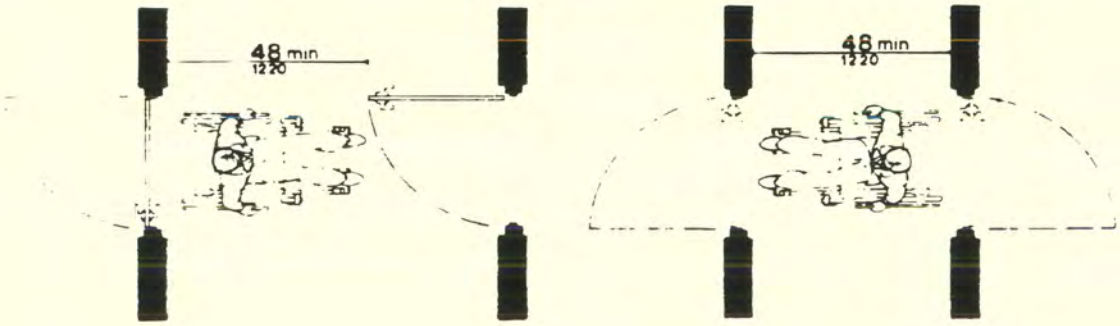

Fig. 26
Two Hinged Doors in Series

4.14 Entrances

4.13.12* Automatic Doors and Power-Assisted Doors. If an automatic door is used, then it shall comply with *ANSI/BHMA A156.10-1985*. Slowly opening, low-powered, automatic doors shall *comply with ANSI A156.19-1984*. Such doors shall not open to back check faster than 3 seconds and shall require no more than 15 lbf (66.6N) to stop door movement. If a power-assisted door is used, its door-opening force shall comply with 4.13.11 and its closing shall conform to the requirements in *ANSI A156.19-1984*.

4.14 Entrances.

4.14.1 Minimum Number. *Entrances required to be accessible by 4.1* shall be part of an accessible route complying with 4.3. Such entrances shall be connected by an accessible route to public transportation stops, to accessible parking and passenger loading zones, and to public streets or sidewalks if available (see 4.3.2(1)). They shall also be connected by an accessible route to all accessible spaces or elements within the building or facility.

4.14.2 Service Entrances. A service entrance shall not be the sole accessible entrance unless it is the only entrance to a building or facility (for example, in a factory or garage).

4.15 Drinking Fountains and Water Coolers.

4.15.1 Minimum Number. *Drinking fountains or water coolers required to be accessible by 4.1* shall comply with 4.15.

4.15.2* Spout Height. Spouts shall be no higher than 36 in (915 mm), measured from the floor or ground surfaces to the spout outlet (see Fig. 27(a)).

4.15.3 Spout Location. The spouts of drinking fountains and water coolers shall be at the front of the unit and shall direct the water flow in a trajectory that is parallel or nearly parallel to the front of the unit. The spout shall provide a flow of water at least 4 in (100 mm) high so as to allow the insertion of a cup or glass under the flow of water. *On an accessible drinking fountain with a round or oval bowl, the spout must be positioned so the flow of water is within 3 in (75 mm) of the front edge of the fountain.*

4.15.4 Controls. Controls shall comply with 4.27.4. *Unit controls shall be front mounted or side mounted near the front edge.*

4.15.5 Clearances.

(1) Wall- and post-mounted cantilevered units shall have a clear knee space between the bottom of the apron and the floor or ground at least 27 in (685 mm) high, 30 in (760 mm) wide, and 17 in to 19 in (430 mm to 485 mm) deep (see Fig. 27(a) and (b)). Such units shall also have a minimum clear floor space 30 in by 48 in (760 mm by 1220 mm) to allow a person in a wheelchair to approach the unit facing forward.

(2) Free-standing or built-in units not having a clear space under them shall have a clear floor space at least 30 in by 48 in (760 mm by 1220 mm) that allows a person in a wheelchair to make a parallel approach to the unit (see Fig. 27(c) and (d)). This clear floor space shall comply with 4.2.4.

4.16 Water Closets.

4.16.1 General. Accessible water closets shall comply with 4.16.

4.16.2 Clear Floor Space. Clear floor space for water closets not in stalls shall comply with Fig. 28. Clear floor space may be arranged to allow either a left-handed or right-handed approach.

4.16.3* Height. The height of water closets shall be 17 in to 19 in (430 mm to 485 mm), measured to the top of the toilet seat (see Fig. 29(b)). *Seats shall not be sprung to return to a lifted position.*

4.16.4* Grab Bars. Grab bars for water closets not located in stalls shall comply with 4.26 and Fig. 29. *The grab bar behind the water closet shall be 36 in (915 mm) minimum.*

4.16.5* Flush Controls. Flush controls shall be hand operated *or automatic* and shall comply with 4.27.4. Controls for flush valves

shall be mounted on the wide side of toilet areas no more than 44 in (1120 mm) above the floor.

4.16.6 Dispensers. Toilet paper dispensers shall be installed within reach, as shown in Fig. 29(b). *Dispensers that control delivery, or that do not permit continuous paper flow, shall not be used.*

4.17 Toilet Stalls.

4.17.1 Location. Accessible toilet stalls shall be on an accessible route and shall meet the requirements of 4.17.

4.17.2 Water Closets. Water closets in accessible stalls shall comply with 4.16.

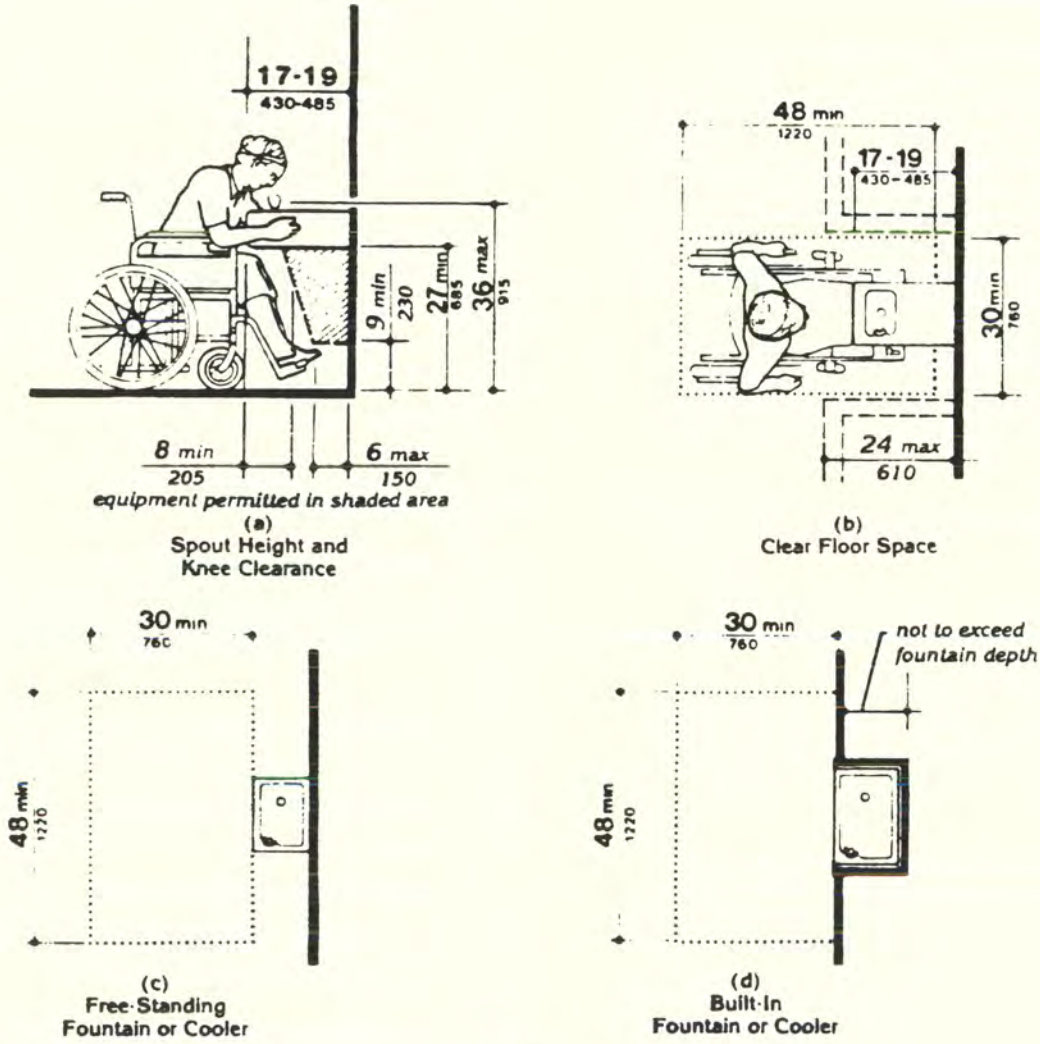

Fig. 27
Drinking Fountains and Water Coolers

4.17 Toilet Stalls

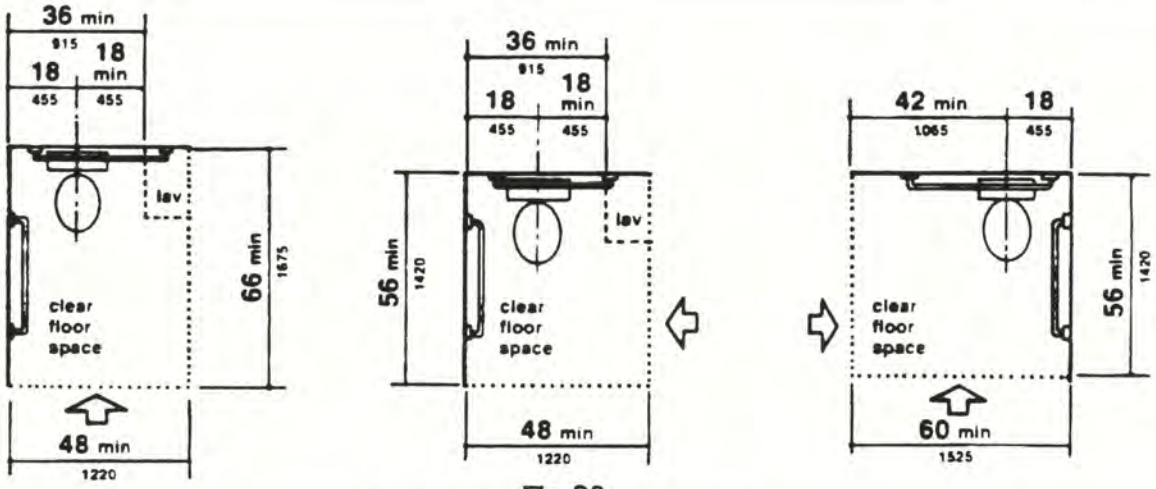

Fig. 28
Clear Floor Space at Water Closets

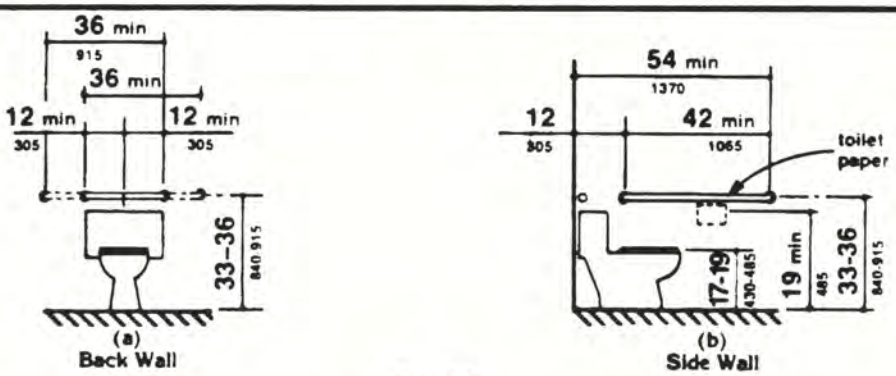

Fig. 29
Grab Bars at Water Closets

4.17.3* Size and Arrangement. The size and arrangement of the standard toilet stall shall comply with Fig. 30(a), *Standard Stall*. Standard toilet stalls with a minimum depth of 56 in (1420 mm) (see Fig. 30(a)) shall have wall-mounted water closets. If the depth of a standard toilet stall is increased at least 3 in (75 mm), then a floor-mounted water closet may be used. Arrangements shown for standard toilet stalls may be reversed to allow either a left- or right-hand approach. Additional stalls shall be provided in conformance with 4.22.4.

EXCEPTION: In instances of alteration work where provision of a standard stall (Fig. 30(a)) is technically infeasible or where plumbing code requirements prevent combining existing stalls to provide space, either alternate stall (Fig. 30(b)) may be provided in lieu of the standard stall.

4.17.4 Toe Clearances. In standard stalls, the front partition and at least one side partition shall provide a toe clearance of at least 9 in (230 mm) above the floor. If the depth of the stall is greater than 60 in (1525 mm), then the toe clearance is not required.

4.17.5* Doors. Toilet stall doors, *including door hardware*, shall comply with 4.13. *If toilet stall approach is from the latch side of the stall door, clearance between the door side of the*

4.17 Toilet Stalls

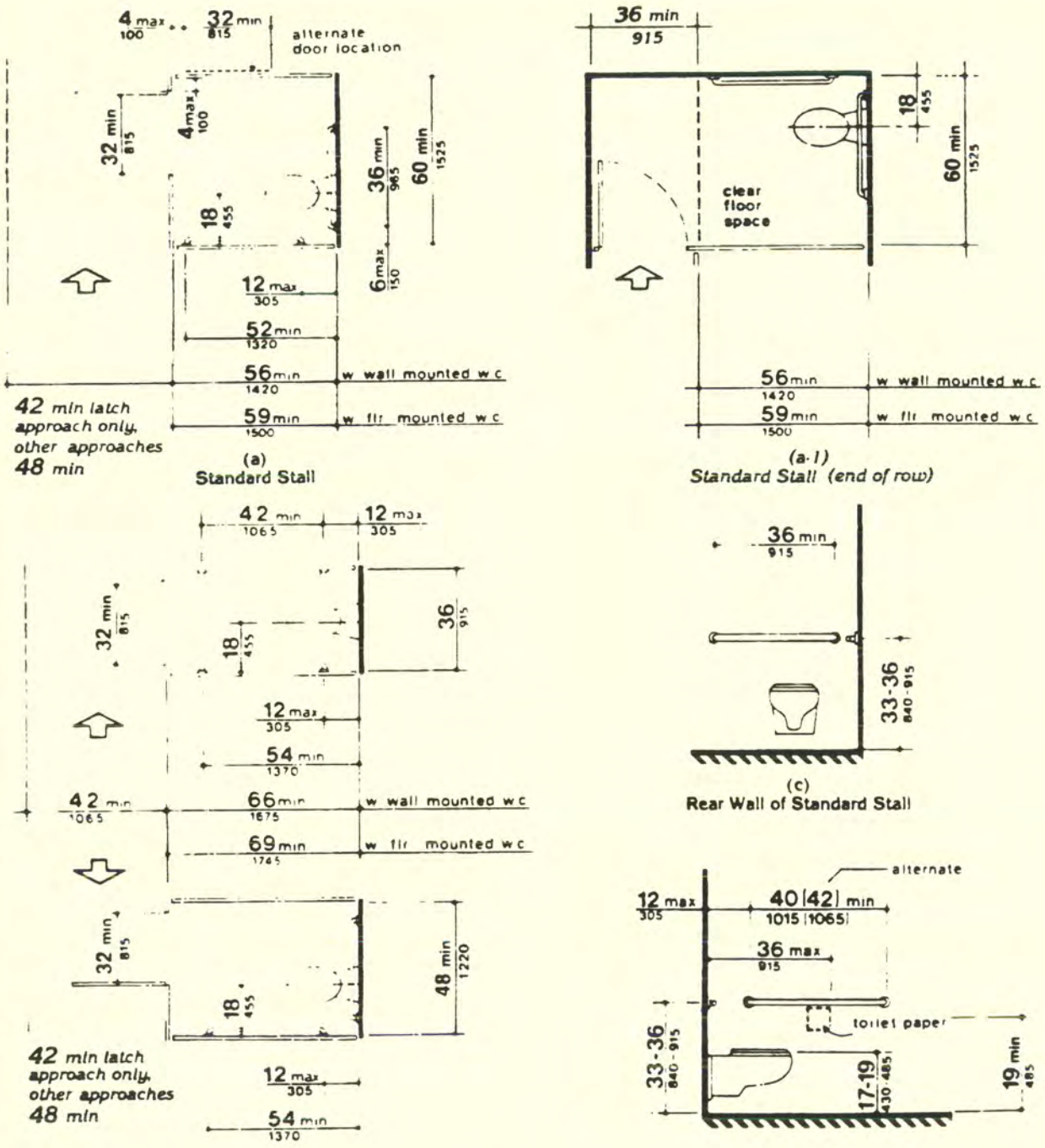

Fig. 30
Toilet Stalls

4.19 Lavatories and Mirrors

stall and any obstruction may be reduced to a minimum of 42 in (1065 mm) (Fig. 30).

4.17.6 Grab Bars. Grab bars complying with the length and positioning shown in Fig. 30(a), (b), (c), and (d) shall be provided. Grab bars may be mounted with any desired method as long as they have a gripping surface at the locations shown and do not obstruct the required clear floor area. Grab bars shall comply with 4.26.

4.18 Urinals.

4.18.1 General. Accessible urinals shall comply with 4.18.

4.18.2 Height. Urinals shall be stall-type or wall-hung with an elongated rim at a maximum of 17 in (430 mm) above the finish floor.

4.18.3 Clear Floor Space. A clear floor space 30 in by 48 in (760 mm by 1220 mm) shall be provided in front of urinals to allow forward approach. This clear space shall adjoin or overlap an accessible route and shall comply with 4.2.4. *Urinal shields that do not extend beyond the front edge of the urinal rim may be provided with 29 in (735 mm) clearance between them.*

4.18.4 Flush Controls. Flush controls shall be hand operated or automatic, and shall comply with 4.27.4, and shall be mounted no more than 44 in (1120 mm) above the finish floor.

4.19 Lavatories and Mirrors.

4.19.1 General. The requirements of 4.19 shall apply to lavatory fixtures, vanities, and built-in lavatories.

4.19.2 Height and Clearances. Lavatories shall be mounted with *the rim or counter surface no higher than 34 in (865 mm) above the finish floor.* Provide a clearance of at least 29 in (735 mm) above the finish floor to the bottom of the apron. Knee and toe clearance shall comply with Fig. 31.

4.19.3 Clear Floor Space. A clear floor space 30 in by 48 in (760 mm by 1220 mm) complying with 4.2.4 shall be provided in front of a lavatory to allow forward approach. Such clear floor space shall adjoin or overlap an accessible route and shall extend a maximum of 19 in (485 mm) underneath the lavatory (see Fig. 32).

4.19.4 Exposed Pipes and Surfaces. Hot water and drain pipes under lavatories shall be insulated or otherwise *configured to protect against contact.* There shall be no sharp or abrasive surfaces under lavatories.

4.19.5 Faucets. Faucets shall comply with 4.27.4. Lever-operated, push-type, and electronically controlled mechanisms are examples of acceptable designs. *If* self-closing valves are

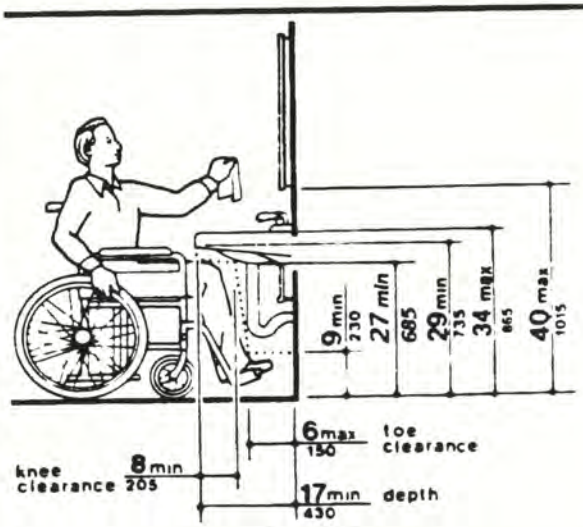

Fig. 31
Lavatory Clearances

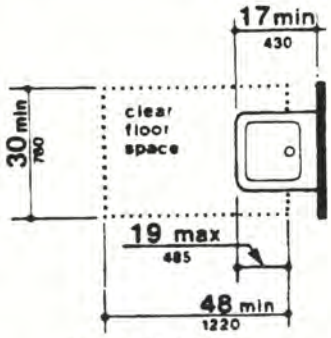

Fig. 32
Clear Floor Space at Lavatories

used the faucet *shall remain* open for at least 10 seconds.

4.19.6* Mirrors. Mirrors shall be mounted with the bottom edge *of the reflecting surface* no higher than 40 in (1015 mm) *above the finish* floor (see Fig. 31).

4.20 Bathtubs.

4.20.1 General. Accessible bathtubs shall comply with 4.20.

4.20.2 Floor Space. Clear floor space in front of bathtubs shall be as shown in Fig. 33.

4.20.3 Seat. An in-tub seat or a seat at the head end of the tub shall be provided as shown in Fig. 33 and 34. The structural strength of seats and their attachments shall comply with 4.26.3. Seats shall be mounted securely and shall not slip during use.

4.20.4 Grab Bars. Grab bars complying with 4.26 shall be provided as shown in Fig. 33 and 34.

4.20.5 Controls. Faucets and other controls complying with 4.27.4 shall be located as shown in Fig. 34.

4.20.6 Shower Unit. A shower spray unit with a hose at least 60 in (1525 mm) long that can be used *both* as a fixed shower head *and* as a hand-held shower shall be provided.

4.20.7 Bathtub Enclosures. If provided, enclosures for bathtubs shall not obstruct controls or transfer from wheelchairs onto bathtub seats or into tubs. Enclosures on bathtubs shall not have tracks mounted on their rims.

4.21 Shower Stalls.

4.21.1* General. Accessible shower stalls shall comply with 4.21.

4.21.2 Size and Clearances. Except as specified in 9.1.2, shower stall size and clear floor space shall comply with Fig. 35(a) or (b). The shower stall in Fig. 35(a) shall be 36 in by 36 in (915 mm by 915 mm). Shower stalls required by 9.1.2 shall comply with Fig. 57(a) or (b). The shower stall in Fig. 35(b) will fit into the space required for a bathtub.

4.21.3 Seat. A seat shall be provided in shower stalls 36 in by 36 in (915 mm by 915 mm) and shall be as shown in Fig. 36. The seat shall be mounted 17 in to 19 in (430 mm to 485 mm) from the bathroom floor and shall extend the full depth of the stall. In a 36 in by 36 in (915 mm by 915 mm) shower stall, the seat shall be on the wall opposite the controls. *Where a fixed seat is provided in a 30 in by 60 in minimum (760 mm by 1525 mm) shower stall, it shall be a folding type and shall be mounted on the wall adjacent to the controls as shown in Fig. 57.* The structural strength of seats and their attachments shall comply with 4.26.3.

4.21.4 Grab Bars. Grab bars complying with 4.26 shall be provided as shown in Fig. 37.

4.21.5 Controls. Faucets and other controls complying with 4.27.4 shall be located as shown in Fig. 37. In shower stalls 36 in by 36 in (915 mm by 915 mm), all controls, faucets, and the shower unit shall be mounted on the side wall opposite the seat.

4.21.6 Shower Unit. A shower spray unit with a hose at least 60 in (1525 mm) long that can be used *both* as a fixed shower head *and* as a hand-held shower shall be provided.

EXCEPTION: In unmonitored facilities where vandalism is a consideration, a fixed shower head mounted at 48 in (1220 mm) above the shower floor may be used in lieu of a hand-held shower head.

4.21.7 Curbs. If provided, curbs in shower stalls 36 in by 36 in (915 mm by 915 mm) shall be no higher than *1/2 in (13 mm)*. Shower stalls that are 30 in by 60 in (760 mm by 1525 mm) minimum shall not have curbs.

4.21.8 Shower Enclosures. If provided, enclosures for shower stalls shall not obstruct controls or obstruct transfer from wheelchairs onto shower seats.

4.22 Toilet Rooms.

4.22.1 Minimum Number. *Toilet facilities required to be accessible by 4.1 shall comply*

4.21 Shower Stalls

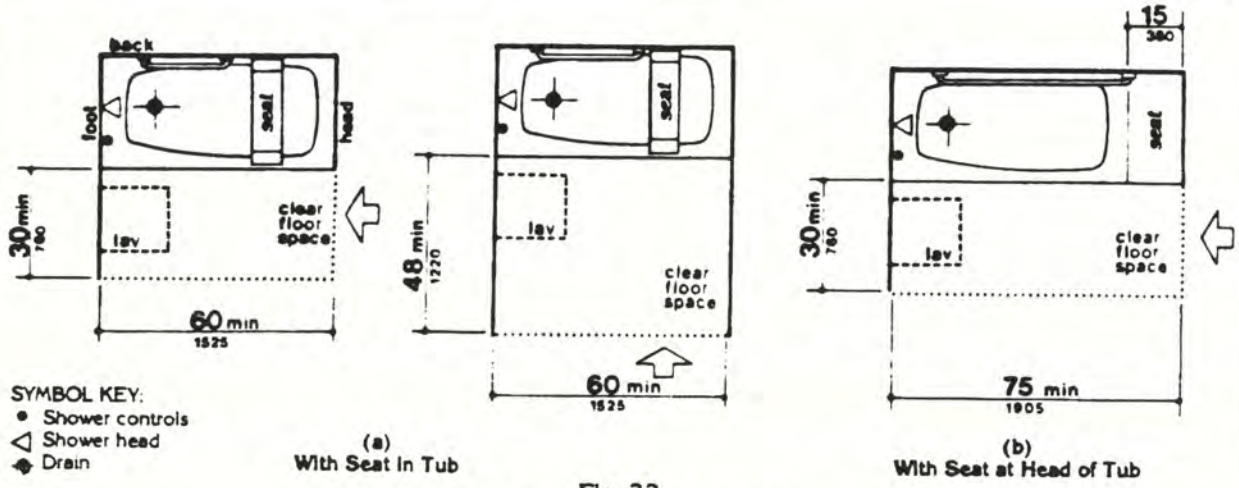

Fig. 33
Clear Floor Space at Bathtubs

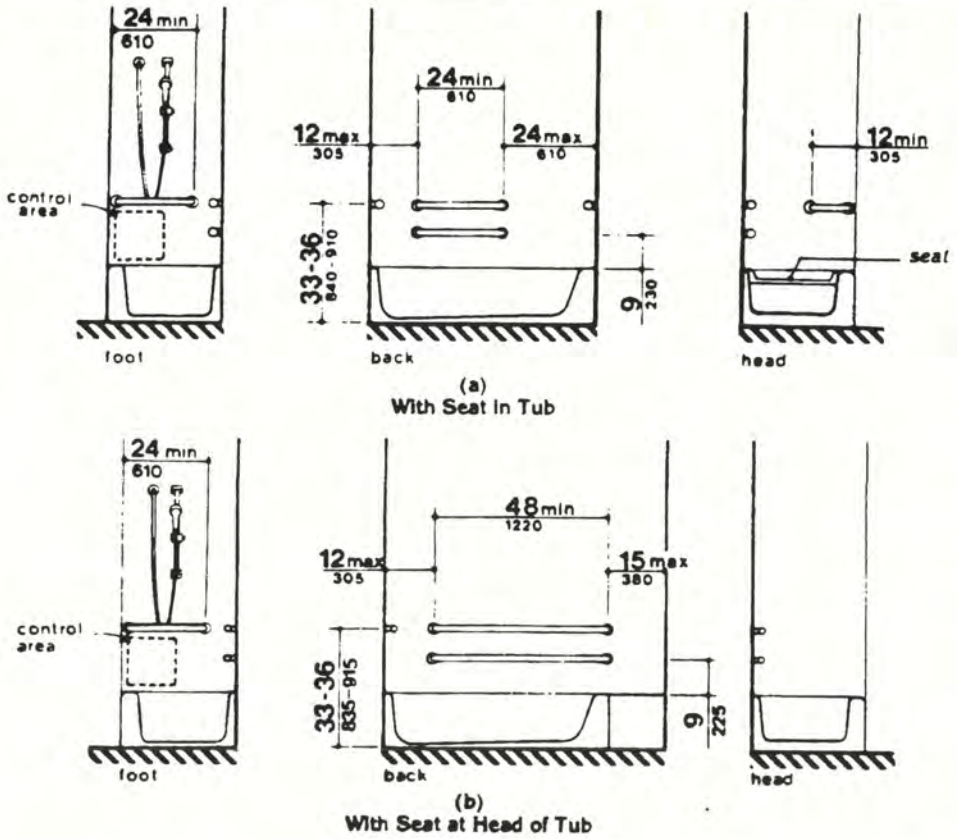

Fig. 34
Grab Bars at Bathtubs

4.22 Toilet Rooms

with 4.22. Accessible toilet rooms shall be on an accessible route.

4.22.2 Doors. All doors to accessible toilet rooms shall comply with 4.13. Doors shall not swing into the clear floor space required for any fixture.

4.22.3* Clear Floor Space. The accessible fixtures and controls required in 4.22.4, 4.22.5, 4.22.6, and 4.22.7 shall be on an accessible route. An unobstructed turning space complying with 4.2.3 shall be provided within an accessible toilet room. The clear floor space at fixtures and controls, the accessible route, and the turning space may overlap.

4.22.4 Water Closets. If toilet stalls are provided, then at least one shall be a standard toilet stall complying with 4.17; *where 6 or more stalls are provided, in addition to the stall complying with 4.17.3, at least one stall 36 in (915 mm) wide with an outward swinging, self-closing door and parallel grab bars complying with Fig. 30(d) and 4.26 shall be provided. Water closets in such stalls* shall comply with 4.16. If water closets are not in stalls, then at least one shall comply with 4.16.

4.22.5 Urinals. If urinals are provided, *then* at least one shall comply with 4.18.

4.22.6 Lavatories and Mirrors. If lavatories and mirrors are provided, *then* at least one of each shall comply with 4.19.

4.22.7 Controls and Dispensers. If controls, dispensers, receptacles, or other

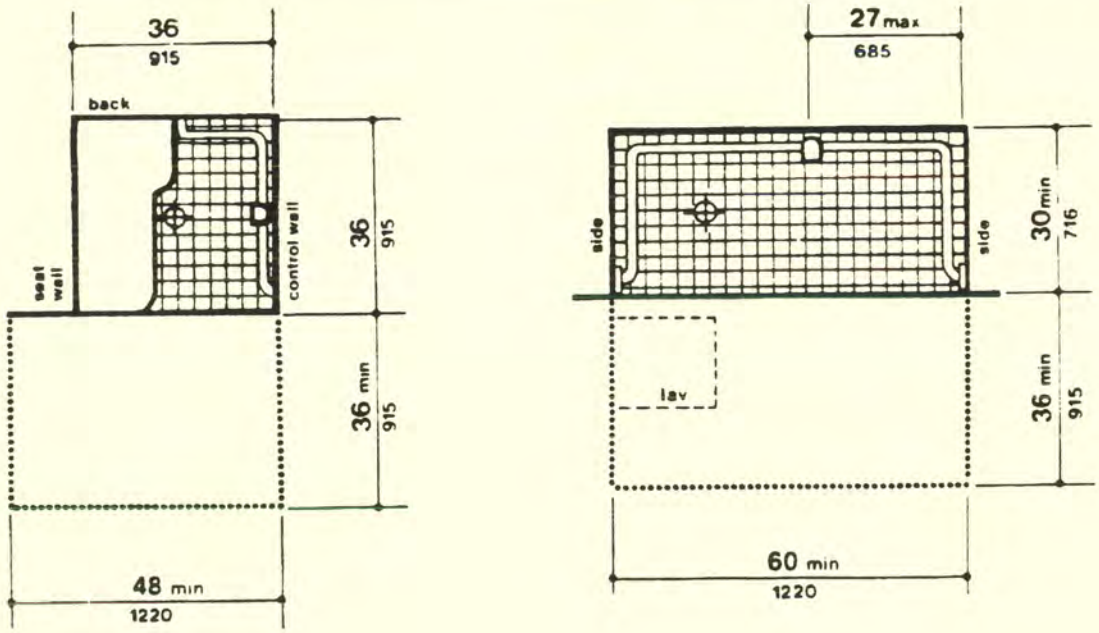

(a)
36-in by 36-in
(915-mm by 915-mm) Stall

(b)
30-in by 60-in
(760-mm by 1525-mm) Stall

Fig. 35
Shower Size and Clearances

4.23 Bathrooms, Bathing Facilities, and Shower Rooms

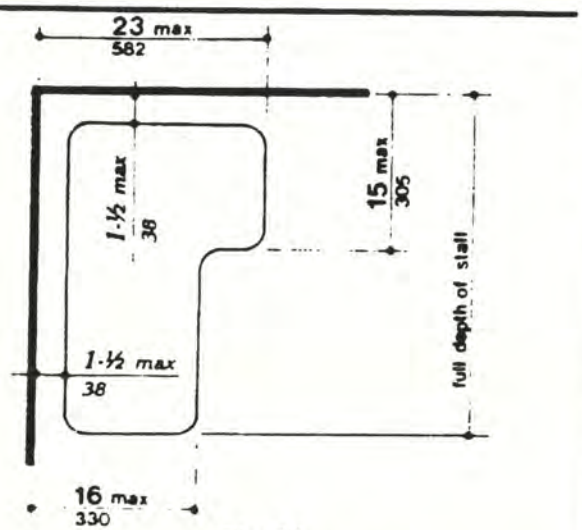

Fig. 36
Shower Seat Design

equipment are provided, *then* at least one of each shall be on an accessible route and shall comply with 4.27.

4.23 Bathrooms, Bathing Facilities, and Shower Rooms.

4.23.1 Minimum Number. Bathrooms, bathing facilities, or shower rooms *required to be accessible by 4.1* shall comply with 4.23 and shall be on an accessible route.

4.23.2 Doors. Doors to accessible bathrooms shall comply with 4.13. Doors shall not swing into the floor space required for any fixture.

4.23.3* Clear Floor Space. The accessible fixtures and controls required in 4.23.4, 4.23.5, 4.23.6, 4.23.7, 4.23.8, and 4.23.9 shall be on an accessible route. An unobstructed turning

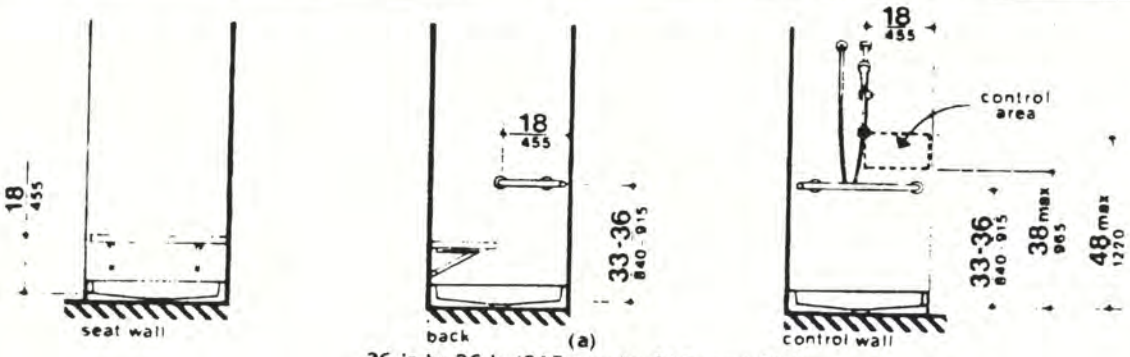

(a)
36-in by 36-in (915-mm by 915-mm) Stall

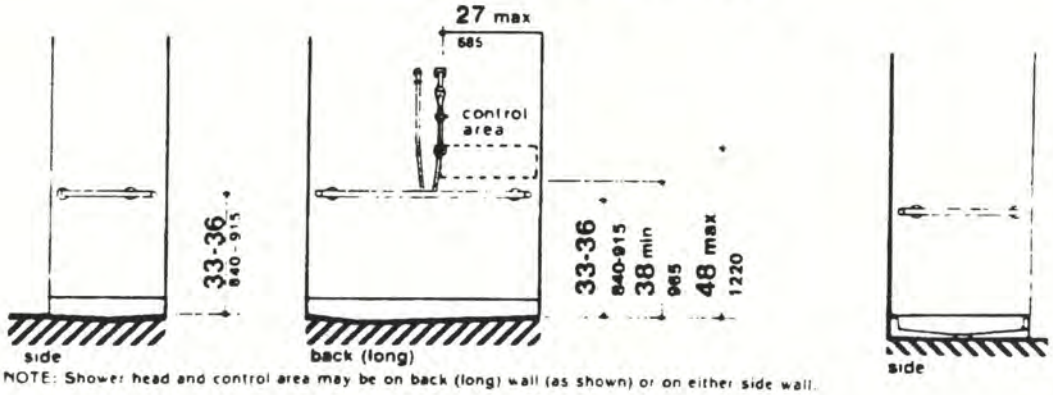

NOTE: Shower head and control area may be on back (long) wall (as shown) or on either side wall.

(b)
30-in by 60-in (760-mm by 1525-mm) Stall

Fig. 37
Grab Bars at Shower Stalls

space complying with 4.2.3 shall be provided within an accessible bathroom. The clear floor spaces at fixtures and controls, the accessible route, and the turning space may overlap.

4.23.4 Water Closets. If toilet stalls are provided, then at least one shall be a standard toilet stall complying with 4.17; *where 6 or more stalls are provided, in addition to the stall complying with 4.17.3, at least one stall 36 in (915 mm) wide with an outward swinging, self-closing door and parallel grab bars complying with Fig. 30(d) and 4.26 shall be provided. Water closets in such stalls* shall comply with 4.16. If water closets are not in stalls, then at least one shall comply with 4.16.

4.23.5 Urinals. If urinals are provided, then at least one shall comply with 4.18.

4.23.6 Lavatories and Mirrors. If lavatories and mirrors are provided, then at least one of each shall comply with 4.19.

4.23.7 Controls and Dispensers. If controls, dispensers, receptacles, or other equipment *are* provided, *then* at least one of each shall be on an accessible route and shall comply with 4.27.

4.23.8 Bathing and Shower Facilities. If tubs or showers are provided, then at least one accessible tub that complies with 4.20 or at least one accessible shower that complies with 4.21 shall be provided.

4.23.9* Medicine Cabinets. If medicine cabinets are provided, at least one shall be located with a usable shelf no higher than 44 in (1120 mm) above the floor space. The floor space shall comply with 4.2.4.

4.24 Sinks.

4.24.1 General. Sinks *required to be accessible by 4.1* shall comply with 4.24.

4.24.2 Height. Sinks shall be mounted with the counter or rim no higher than 34 in (865 mm) *above the finish floor.*

4.24.3 Knee Clearance. Knee clearance that is at least 27 in (685 mm) high, 30 in (760 mm) wide, and 19 in (485 mm) deep shall be provided underneath sinks.

4.24.4 Depth. Each sink shall be a maximum of 6-1/2 in (165 mm) deep.

4.24.5 Clear Floor Space. A clear floor space at least 30 in by 48 in (760 mm by 1220 mm) complying with 4.2.4 shall be provided in front of a sink to allow forward approach. The clear floor space shall be on an accessible route and shall extend a maximum of 19 in (485 mm) underneath the sink (see Fig. 32).

4.24.6 Exposed Pipes and Surfaces. Hot water and drain pipes exposed under sinks shall be insulated or otherwise *configured so as to protect against contact.* There shall be no sharp or abrasive surfaces under sinks.

4.24.7 Faucets. Faucets shall comply with 4.27.4. Lever-operated, push-type, touch-type, or electronically controlled mechanisms are acceptable designs.

4.25 Storage.

4.25.1 General. *Fixed* storage facilities such as cabinets, shelves, closets, and drawers *required to be accessible by 4.1* shall comply with 4.25.

4.25.2 Clear Floor Space. A clear floor space at least 30 in by 48 in (760 mm by 1220 mm) complying with 4.2.4 that allows either a forward or parallel approach by a person using a wheelchair shall be provided at accessible storage facilities.

4.25.3 Height. Accessible storage spaces shall be within at least one of the reach ranges specified in 4.2.5 and 4.2.6 *(see Fig. 5 and Fig. 6).* Clothes rods or shelves shall be a maximum of 54 in (1370 mm) *above the finish floor for a side approach. Where the distance from the wheelchair to the clothes rod or shelf exceeds 10 in (255 mm) (as in closets without accessible doors) the height and depth to the rod or shelf shall comply with Fig. 38(a) and Fig. 38(b).*

4.25.4 Hardware. Hardware for accessible storage facilities shall comply with 4.27.4. Touch latches and U-shaped pulls are acceptable.

4.26 Handrails, Grab Bars, and Tub and Shower Seats

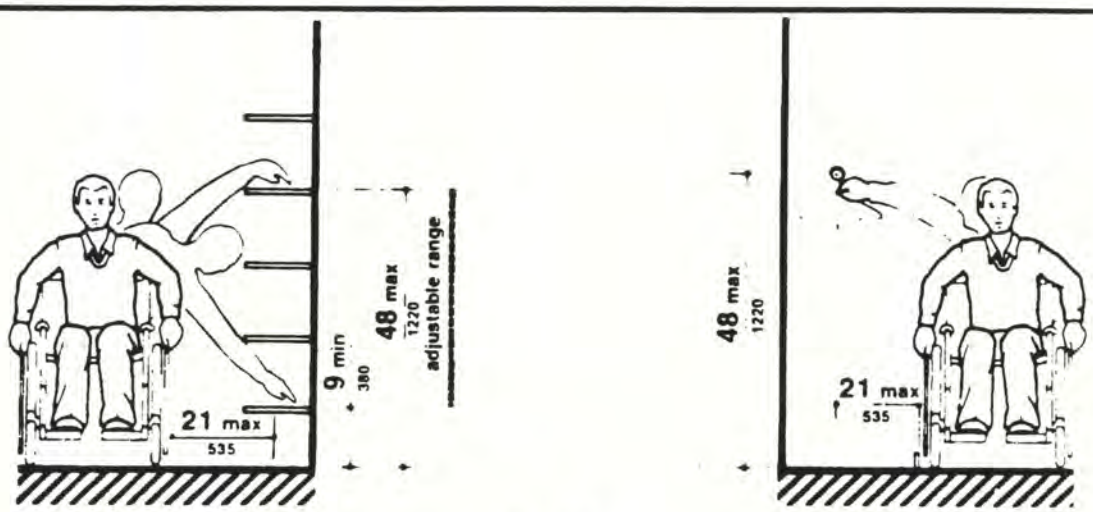

(a) Shelves *(b) Closets*

Fig. 38
Storage Shelves and Closets

4.26 Handrails, Grab Bars, and Tub and Shower Seats.

4.26.1* General. All handrails, grab bars, and tub and shower seats *required to be accessible by 4.1, 4.8, 4.9, 4.16, 4.17, 4.20 or 4.21* shall comply with 4.26.

4.26.2* Size and Spacing of Grab Bars and Handrails. The diameter or width of the gripping surfaces of a handrail or grab bar shall be 1-1/4 in to 1-1/2 in (32 mm to 38 mm), or the shape shall provide an equivalent gripping surface. If handrails or grab bars are mounted adjacent to a wall, the space between the wall and the grab bar shall be 1-1/2 in (38 mm) (see Fig. 39(a), (b), (c), and *(e)*). Handrails may be located in a recess if the recess is a maximum of 3 in (75 mm) deep and extends at least 18 in (455 mm) above the top of the rail (see Fig. 39(d)).

4.26.3 Structural Strength. The structural strength of grab bars, tub and shower seats, fasteners, and mounting devices shall meet the following specification:

(1) Bending stress in a grab bar or seat induced by the maximum bending moment from the application of 250 lbf (1112N) shall be less than the allowable stress for the material of the grab bar or seat.

(2) Shear stress induced in a grab bar or seat by the application of 250 lbf (1112N) shall be less than the allowable shear stress for the material of the grab bar or seat. If the connection between the grab bar or seat and its mounting bracket or other support is considered to be fully restrained, then direct and torsional shear stresses shall be totaled for the combined shear stress, which shall not exceed the allowable shear stress.

(3) Shear force induced in a fastener or mounting device from the application of 250 lbf (1112N) shall be less than the allowable lateral load of either the fastener or mounting device or the supporting structure, whichever is the smaller allowable load.

(4) Tensile force induced in a fastener by a direct tension force of 250 lbf (1112N) plus the maximum moment from the application of 250 lbf (1112N) shall be less than the allowable withdrawal load between the fastener and the supporting structure.

(5) Grab bars shall not rotate within their fittings.

4.26 Handrails, Grab Bars, and Tub and Shower Seats

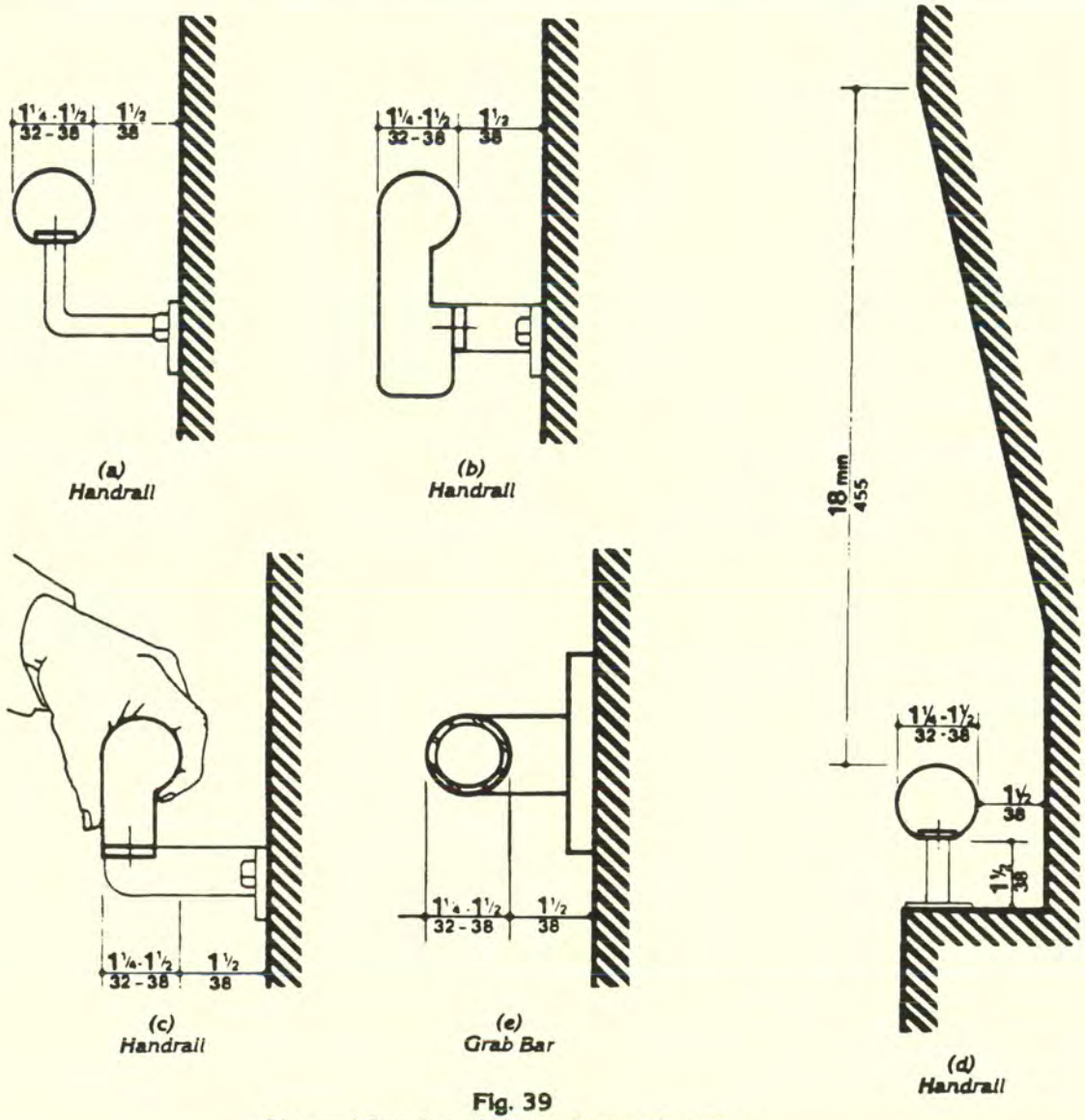

Fig. 39
Size and Spacing of Handrails and Grab Bars

4.26.4 Eliminating Hazards. A handrail or grab bar and any wall or other surface adjacent to it shall be free of any sharp or abrasive elements. Edges shall have a minimum radius of 1/8 in (3.2 mm).

4.27 Controls and Operating Mechanisms.

4.27.1 General. Controls and operating mechanisms *required to be accessible by 4.1* shall comply with 4.27.

4.28 Alarms

4.27.2 Clear Floor Space. Clear floor space complying with 4.2.4 that allows a forward or a parallel approach by a person using a wheelchair shall be provided at controls, dispensers, receptacles, and other operable equipment.

4.27.3* Height. The highest operable part of controls, dispensers, receptacles, and other operable equipment shall be placed within at least one of the reach ranges specified in 4.2.5 and 4.2.6. Electrical and communications system receptacles on walls shall be mounted no less than 15 in (380 mm) above the floor.

EXCEPTION: These requirements do not apply where the use of special equipment dictates otherwise or where electrical and communications systems receptacles are not normally intended for use by building occupants.

4.27.4 Operation. Controls and operating mechanisms shall be operable with one hand and shall not require tight grasping, pinching, or twisting of the wrist. The force required to activate controls shall be no greater than 5 lbf (22.2 N).

4.28 Alarms.

4.28.1 General. *Alarm systems required to be accessible by 4.1 shall comply with 4.28. At a minimum, visual signal appliances shall be provided in buildings and facilities in each of the following areas: restrooms and any other general usage areas (e.g., meeting rooms), hallways, lobbies, and any other area for common use.*

4.28.2* Audible Alarms. If provided, audible emergency alarms shall produce a sound that exceeds the prevailing equivalent sound level in the room or space by at least 15 *dbA* or exceeds any maximum sound level with a duration of *60* seconds by 5 *dbA*, whichever is louder. Sound levels for alarm signals shall not exceed 120 *dbA*.

4.28.3* Visual Alarms. *Visual alarm signal appliances shall be integrated into the building or facility alarm system. If single station audible alarms are provided then single station visual alarm signals shall be provided. Visual alarm signals shall have the following minimum photometric and location features:*

(1) The lamp shall be a xenon strobe type or equivalent.

(2) The color shall be clear or nominal white (i.e., unfiltered or clear filtered white light).

(3) The maximum pulse duration shall be two-tenths of one second (0.2 sec) with a maximum duty cycle of 40 percent. The pulse duration is defined as the time interval between initial and final points of 10 percent of maximum signal.

(4) The intensity shall be a minimum of 75 candela.

(5) The flash rate shall be a minimum of 1 Hz and a maximum of 3 Hz.

(6) The appliance shall be placed 80 in (2030 mm) above the highest floor level within the space or 6 in (152 mm) below the ceiling, whichever is lower.

(7) In general, no place in any room or space required to have a visual signal appliance shall be more than 50 ft (15 m) from the signal (in the horizontal plane). In large rooms and spaces exceeding 100 ft (30 m) across, without obstructions 6 ft (2 m) above the finish floor, such as auditoriums, devices may be placed around the perimeter, spaced a maximum 100 ft (30 m) apart, in lieu of suspending appliances from the ceiling.

(8) No place in common corridors or hallways in which visual alarm signalling appliances are required shall be more than 50 ft (15 m) from the signal.

4.28.4* Auxiliary Alarms. *Units and* sleeping accommodations shall have a visual alarm connected to the building emergency alarm system or shall have a standard 110-volt electrical receptacle into which such an alarm can be connected *and a means by which a signal from the building emergency alarm system can trigger such an auxiliary alarm. When visual alarms are in place the signal shall be visible in all areas of the unit or room.* Instructions for use of the auxiliary alarm or receptacle shall be provided.

4.29 *Detectable* Warnings.

4.29.1 General. *Detectable* warnings *required by 4.1 and 4.7* shall comply with 4.29.

4.29.2* *Detectable* Warnings on Walking Surfaces. *Detectable* warnings shall consist of *raised truncated domes with a diameter of nominal 0.9 in (23 mm), a height of nominal 0.2 in (5 mm) and a center-to-center spacing of nominal 2.35 in (60 mm) and* shall contrast visually with *adjoining surfaces, either light-on-dark, or dark-on-light.*

The material used to provide contrast shall be an integral part of the walking surface. Detectable warnings used on interior surfaces shall differ from adjoining walking surfaces in resiliency or sound-on-cane contact.

4.29.3 *Detectable* Warnings on Doors To Hazardous Areas. *(Reserved).*

4.29.4 *Detectable* Warnings at Stairs. *(Reserved).*

4.29.5 *Detectable* Warnings at Hazardous Vehicular Areas. If a walk crosses or adjoins a vehicular way, *and the walking surfaces are not separated by* curbs, railings, or other elements *between the pedestrian areas and vehicular areas*, the boundary between the areas shall be defined by a continuous *detectable* warning *which is* 36 in (915 mm) wide, complying with 4.29.2.

4.29.6 *Detectable* Warnings at Reflecting Pools. The edges of reflecting pools shall be protected by railings, walls, curbs, or *detectable* warnings complying with 4.29.2.

4.29.7 Standardization. *(Reserved).*

4.30 Signage.

4.30.1* General. Signage *required to be accessible by 4.1 shall comply with the applicable provisions of 4.30.*

4.30.2* Character Proportion. Letters and numbers on signs shall have a width-to-height ratio between 3:5 and 1:1 and a stroke-width-to-height ratio between 1:5 and 1:10.

4.30.3 Character Height. *Characters and numbers on signs shall be sized according to the viewing distance from which they are to be read. The minimum height is measured using an upper case X. Lower case characters are permitted.*

Height Above Finished Floor	*Minimum Character Height*
Suspended or Projected Overhead in compliance with 4.4.2	*3 in. (75 mm) minimum*

4.30.4* Raised *and Brailled* Characters *and Pictorial Symbol Signs (Pictograms). Letters and numerals shall be raised 1/32 in (0.8 mm) minimum, *upper case*, sans serif *or simple serif type and shall be accompanied with Grade 2 Braille.* Raised characters shall be at least 5/8 in (16 mm) high, but no higher than 2 in (50 mm). *Pictograms shall be accompanied by the equivalent verbal description placed directly below the pictogram. The border dimension of the pictogram shall be 6 in (152 mm) minimum in height.*

4.30.5* *Finish and Contrast.* *The characters and background of signs shall be eggshell, matte, or other non-glare finish.* Characters and symbols shall contrast with their background — either light characters on a dark background or dark characters on a light background.

4.30.6 *Mounting Location and Height.* *Where permanent identification is provided for rooms and spaces, signs shall be installed on the wall adjacent to the latch side of the door. Where there is no wall space to the latch side of the door, including at double leaf doors, signs shall be placed on the nearest adjacent wall. Mounting height shall be 60 in (1525 mm) above the finish floor to the centerline of the sign. Mounting location for such signage shall be so that a person may approach within 3 in (76 mm) of signage without encountering protruding objects or standing within the swing of a door.*

4.30.7* Symbols of Accessibility.

(1) Facilities and elements required to be identified as accessible by 4.1 shall use the international symbol of accessibility. The

4.30 Signage

(a)
Proportions
International Symbol of Accessibility

(b)
Display Conditions
International Symbol of Accessibility

(c)
International TDD Symbol

(d)
International Symbol of Access for Hearing Loss

Fig. 43
International Symbols

symbol shall be displayed as shown in Fig. 43*(a) and (b)*.

(2) Volume Control Telephones. Telephones required to have a volume control by 4.1.3(17)(b) shall be identified by a sign containing a depiction of a telephone handset with radiating sound waves.

(3) Text Telephones. Text telephones required by 4.1.3 (17)(c) shall be identified by the international TDD symbol (Fig 43(c)). In addition, if a facility has a public text telephone, directional signage indicating the location of the nearest text telephone shall be placed adjacent to all banks of telephones which do not contain a text telephone. Such directional signage shall include the international TDD symbol. If a facility has no banks of telephones, the directional signage shall be provided at the entrance (e.g., in a building directory).

(4) Assistive Listening Systems. In assembly areas where permanently installed assistive listening systems are required by 4.1.3(19)(b) the availability of such systems shall be identified with signage that includes the international symbol of access for hearing loss (Fig 43(d)).

4.30.8* *Illumination Levels.* *(Reserved).*

4.31 Telephones.

4.31.1 General. Public telephones *required to be accessible by 4.1* shall comply with 4.31.

4.31.2 Clear Floor or Ground Space. A clear floor or ground space at least 30 in by 48 in (760 mm by 1220 mm) that allows either a forward or parallel approach by a person using a wheelchair shall be provided at telephones (see Fig. 44). The clear floor or ground space shall comply with 4.2.4. Bases, enclosures, and fixed seats shall not impede approaches to telephones by people who use wheelchairs.

4.31.3* Mounting Height. The highest operable part of the telephone shall be within the reach ranges specified in 4.2.5 or 4.2.6.

4.31.4 *Protruding Objects.* *Telephones shall comply with 4.4.*

4.31 Telephones

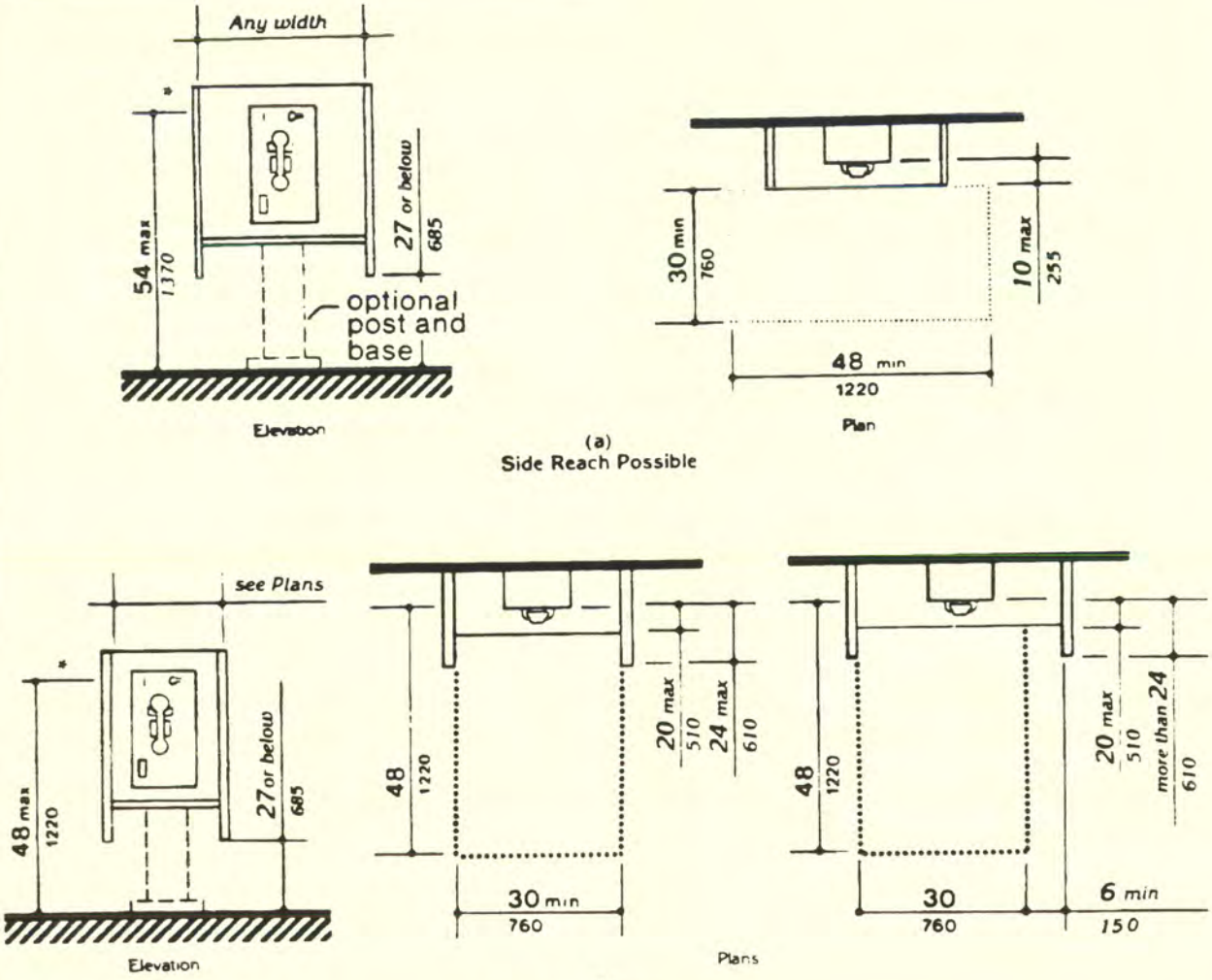

*Height to highest operable parts which are essential to basic operation of telephone.

Fig. 44
Mounting Heights and Clearances for Telephones

4.31.5 *Hearing Aid Compatible and Volume Control Telephones Required by 4.1.*

(1) Telephones shall be hearing aid compatible.

(2) Volume controls, *capable of a minimum of 12 dbA and a maximum of 18 dbA above normal, shall be provided in accordance with 4.1.3. If an automatic reset is provided then 18 dbA may be exceeded.*

4.31.6 Controls. Telephones shall have pushbutton controls where service for such equipment is available.

4.32 *Fixed or Built-in* Seating and Tables

4.31.7 Telephone Books. Telephone books, if provided, shall be located *in a position that complies with the reach ranges specified in 4.2.5 and 4.2.6.*

4.31.8 Cord Length. The cord from the telephone to the handset shall be at least 29 in (735 mm) long.

4.31.9* Text Telephones Required by 4.1.

(1) Text telephones used with a pay telephone shall be permanently affixed within, or adjacent to, the telephone enclosure. If an acoustic coupler is used, the telephone cord shall be sufficiently long to allow connection of the text telephone and the telephone receiver.

(2) Pay telephones designed to accommodate a portable text telephone shall be equipped with a shelf and an electrical outlet within or adjacent to the telephone enclosure. The telephone handset shall be capable of being placed flush on the surface of the shelf. The shelf shall be capable of accommodating a text telephone and shall have 6 in (152 mm) minimum vertical clearance in the area where the text telephone is to be placed.

(3) Equivalent facilitation may be provided. For example, a portable text telephone may be made available in a hotel at the registration desk if it is available on a 24-hour basis for use with nearby public pay telephones. In this instance, at least one pay telephone shall comply with paragraph 2 of this section. In addition, if an acoustic coupler is used, the telephone handset cord shall be sufficiently long so as to allow connection of the text telephone and the telephone receiver. Directional signage shall be provided and shall comply with 4.30.7.

4.32 *Fixed or Built-in* Seating and Tables.

4.32.1 Minimum Number. Fixed or built-in seating or tables *required to be accessible by 4.1* shall comply with 4.32.

4.32.2 Seating. If seating spaces for people in wheelchairs are provided at *fixed* tables or counters, clear floor space complying with 4.2.4 shall be provided. Such clear floor space shall not overlap knee space by more than 19 in (485 mm) (see Fig. 45).

4.32.3 Knee Clearances. If seating for people in wheelchairs is provided at tables or counters, knee spaces at least 27 in (685 mm) high, 30 in (760 mm) wide, and 19 in (485 mm) deep shall be provided (see Fig. 45).

4.32.4* Height of Tables or Counters. The tops of *accessible* tables and *counters* shall be from 28 in to 34 in (710 mm to 865 mm) *above the finish* floor or ground.

4.33 Assembly Areas.

4.33.1 Minimum Number. Assembly *and associated* areas *required to be accessible by 4.1 shall comply with 4.33.*

4.33.2* Size of Wheelchair Locations. Each wheelchair location shall provide minimum clear ground or floor spaces as shown in Fig. 46.

4.33.3* Placement of Wheelchair Locations. Wheelchair areas shall be an integral part of any fixed seating plan and shall be *provided so as to provide people with physical disabilities a choice of admission prices and lines of sight comparable to those for members of the general public.* They shall adjoin an accessible route that also serves as a means of egress in case of emergency. *At least one companion fixed seat shall be provided next to each wheelchair seating area. When the seating capacity exceeds 300, wheelchair spaces shall be provided in more than one location. Readily removable seats may be installed in wheelchair spaces when the spaces are not required to accommodate wheelchair users.*

EXCEPTION: Accessible viewing positions may be clustered for bleachers, balconies, and other areas having sight lines that require slopes of greater than 5 percent. Equivalent accessible viewing positions may be located on levels having accessible egress.

4.33.4 Surfaces. The ground or floor at wheelchair locations shall be level and shall comply with 4.5.

4.33 Assembly Areas

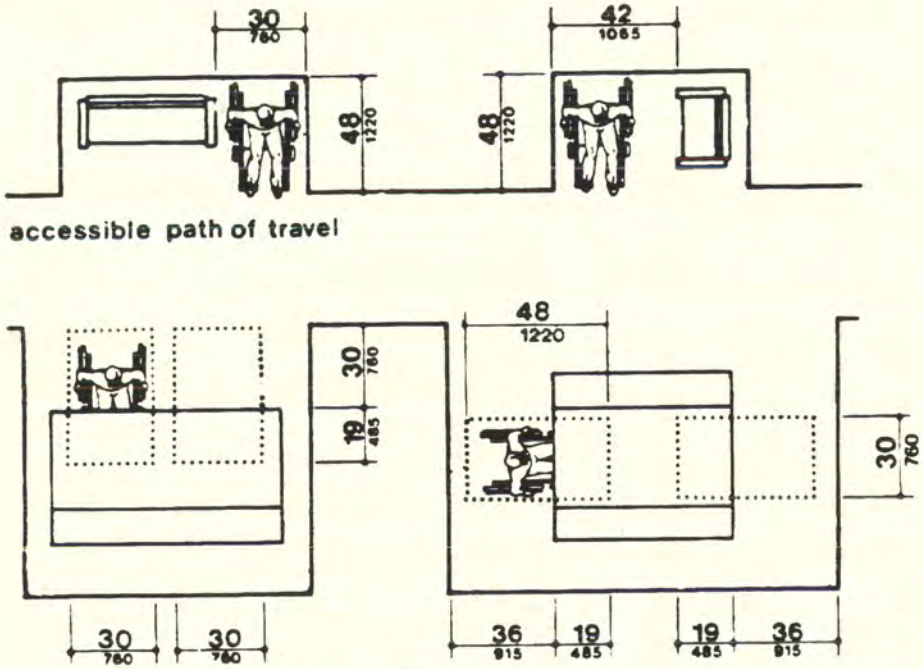

Fig. 45
Minimum Clearances for Seating and Tables

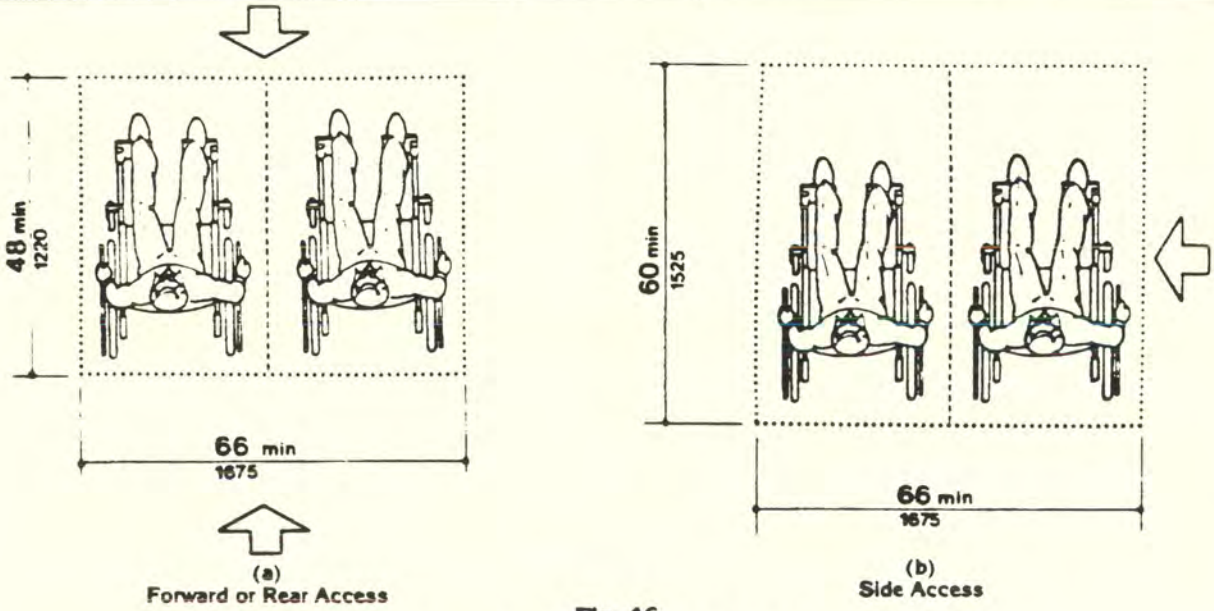

Fig. 46
Space Requirements for Wheelchair Seating Spaces in Series

4.34 Automated Teller Machines

4.33.5 Access to Performing Areas. An accessible route shall connect wheelchair seating locations with performing areas, including stages, arena floors, dressing rooms, locker rooms, and other spaces used by performers.

4.33.6* Placement of Listening Systems. If the listening system provided serves individual fixed seats, then such seats shall be located within a 50 ft (15 m) viewing distance of the stage or playing area and shall have a complete view of the stage or playing area.

4.33.7* Types of Listening Systems. *Assistive listening systems (ALS) are intended to augment standard public address and audio systems by providing signals which can be received directly by persons with special receivers or their own hearing aids and which eliminate or filter background noise. The type of assistive listening system appropriate for a particular application depends on the characteristics of the setting, the nature of the program, and the intended audience. Magnetic induction loops, infra-red and radio frequency systems are types of listening systems which are appropriate for various applications.*

4.34 Automated Teller Machines.

4.34.1 General. *Each machine required to be accessible by 4.1.3 shall be on an accessible route and shall comply with 4.34.*

4.34.2 Controls. *Controls for user activation shall comply with the requirements of 4.27.*

4.34.3 Clearances and Reach Range. *Free standing or built-in units not having a clear space under them shall comply with 4.27.2 and 4.27.3 and provide for a parallel approach and both a forward and side reach to the unit allowing a person in a wheelchair to access the controls and dispensers.*

4.34.4 Equipment for Persons with Vision Impairments. *Instructions and all information for use shall be made accessible to and independently usable by persons with vision impairments.*

4.35 Dressing and Fitting Rooms.

4.35.1 General. *Dressing and fitting rooms required to be accessible by 4.1 shall comply with 4.35 and shall be on an accessible route.*

4.35.2 Clear Floor Space. *A clear floor space allowing a person using a wheelchair to make a 180-degree turn shall be provided in every accessible dressing room entered through a swinging or sliding door. No door shall swing into any part of the turning space. Turning space shall not be required in a private dressing room entered through a curtained opening at least 32 in (815 mm) wide if clear floor space complying with section 4.2 renders the dressing room usable by a person using a wheelchair.*

4.35.3 Doors. *All doors to accessible dressing rooms shall be in compliance with section 4.13.*

4.35.4 Bench. *Every accessible dressing room shall have a 24 in by 48 in (610 mm by 1220 mm) bench fixed to the wall along the longer dimension. The bench shall be mounted 17 in to 19 in (430 mm to 485 mm) above the finish floor. Clear floor space shall be provided alongside the bench to allow a person using a wheelchair to make a parallel transfer onto the bench. The structural strength of the bench and attachments shall comply with 4.26.3. Where installed in conjunction with showers, swimming pools, or other wet locations, water shall not accumulate upon the surface of the bench and the bench shall have a slip-resistant surface.*

4.35.5 Mirror. *Where mirrors are provided in dressing rooms of the same use, then in an accessible dressing room, a full-length mirror, measuring at least 18 in wide by 54 in high (460 mm by 1370 mm), shall be mounted in a position affording a view to a person on the bench as well as to a person in a standing position.*

NOTE: Sections 4.1.1 through 4.1.7 and sections 5 through 10 are different from ANSI A117.1 in their entirety and are printed in standard type.

5. RESTAURANTS AND CAFETERIAS.

5.1* General. Except as specified or modified in this section, restaurants and cafeterias shall comply with the requirements of 4.1 to 4.35. Where fixed tables (or dining counters where food is consumed but there is no service) are provided, at least 5 percent, but not less than one, of the fixed tables (or a portion of the dining counter) shall be accessible and shall comply with 4.32 as required in 4.1.3(18). In establishments where separate areas are designated for smoking and non-smoking patrons, the required number of accessible fixed tables (or counters) shall be proportionally distributed between the smoking and non-smoking areas. In new construction, and where practicable in alterations, accessible fixed tables (or counters) shall be distributed throughout the space or facility.

5.2 Counters and Bars. Where food or drink is served at counters exceeding 34 in (865 mm) in height for consumption by customers seated on stools or standing at the counter, a portion of the main counter which is 60 in (1525 mm) in length minimum shall be provided in compliance with 4.32 or service shall be available at accessible tables within the same area.

5.3 Access Aisles. All accessible fixed tables shall be accessible by means of an access aisle at least 36 in (915 mm) clear between parallel edges of tables or between a wall and the table edges.

5.4 Dining Areas. In new construction, all dining areas, including raised or sunken dining areas, loggias, and outdoor seating areas, shall be accessible. In non-elevator buildings, an accessible means of vertical access to the mezzanine is not required under the following conditions: 1) the area of mezzanine seating measures no more than 33 percent of the area of the total accessible seating area; 2) the same services and decor are provided in an accessible space usable by the general public; and, 3) the accessible areas are not restricted to use by people with disabilities. In alterations, accessibility to raised or sunken dining areas, or to all parts of outdoor seating areas is not required provided that the same services and decor are provided in an accessible space usable by the general public and are not restricted to use by people with disabilities.

5.5 Food Service Lines. Food service lines shall have a minimum clear width of 36 in (915 mm), with a preferred clear width of 42 in (1065 mm) to allow passage around a person using a wheelchair. Tray slides shall be mounted no higher than 34 in (865 mm) above the floor (see Fig. 53). If self-service shelves

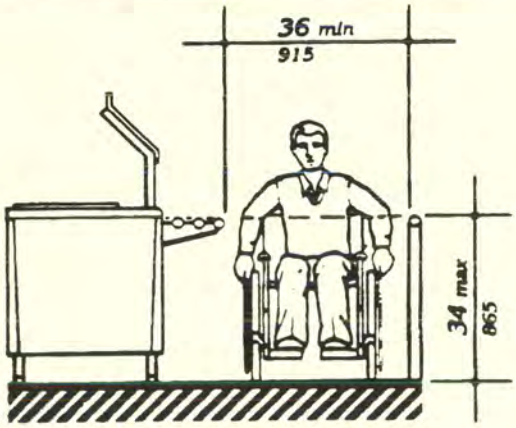

Fig. 53
Food Service Lines

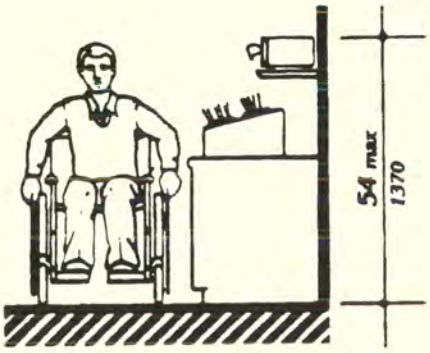

Fig. 54
Tableware Areas

6.0 Medical Care Facilities

are provided, at least 50 percent of each type must be within reach ranges specified in 4.2.5 and 4.2.6.

5.6 Tableware and Condiment Areas. Self-service shelves and dispensing devices for tableware, dishware, condiments, food and beverages shall be installed to comply with 4.2 (see Fig. 54).

5.7 Raised Platforms. In banquet rooms or spaces where a head table or speaker's lectern is located on a raised platform, the platform shall be accessible in compliance with 4.8 or 4.11. Open edges of a raised platform shall be protected by placement of tables or by a curb.

5.8 Vending Machines and Other Equipment. Spaces for vending machines and other equipment shall comply with 4.2 and shall be located on an accessible route.

5.9 Quiet Areas. (Reserved).

6. MEDICAL CARE FACILITIES.

6.1 General. Medical care facilities included in this section are those in which people receive physical or medical treatment or care and where persons may need assistance in responding to an emergency and where the period of stay may exceed twenty-four hours. In addition to the requirements of 4.1 through 4.35, medical care facilities and buildings shall comply with 6.

(1) Hospitals - general purpose hospitals, psychiatric facilities, detoxification facilities — At least 10 percent of patient bedrooms and toilets, and all public use and common use areas are required to be designed and constructed to be accessible.

(2) Hospitals and rehabilitation facilities that specialize in treating conditions that affect mobility, or units within either that specialize in treating conditions that affect mobility — All patient bedrooms and toilets, and all public use and common use areas are required to be designed and constructed to be accessible.

(3) Long term care facilities, nursing homes — At least 50 percent of patient bedrooms and toilets, and all public use and common use areas are required to be designed and constructed to be accessible.

(4) Alterations to patient bedrooms.

(a) When patient bedrooms are being added or altered as part of a planned renovation of an entire wing, a department, or other discrete area of an existing medical facility, a percentage of the patient bedrooms that are being added or altered shall comply with 6.3. The percentage of accessible rooms provided shall be consistent with the percentage of rooms required to be accessible by the applicable requirements of 6.1(1), 6.1(2), or 6.1(3), until the number of accessible patient bedrooms in the facility equals the overall number that would be required if the facility were newly constructed. (For example, if 20 patient bedrooms are being altered in the obstetrics department of a hospital, 2 of the altered rooms must be made accessible. If, within the same hospital, 20 patient bedrooms are being altered in a unit that specializes in treating mobility impairments, all of the altered rooms must be made accessible.) Where toilet/bath rooms are part of patient bedrooms which are added or altered and required to be accessible, each such patient toilet/bathroom shall comply with 6.4.

(b) When patient bedrooms are being added or altered individually, and not as part of an alteration of the entire area, the altered patient bedrooms shall comply with 6.3, unless either: a) the number of accessible rooms provided in the department or area containing the altered patient bedroom equals the number of accessible patient bedrooms that would be required if the percentage requirements of 6.1(1), 6.1(2), or 6.1(3) were applied to that department or area; or b) the number of accessible patient bedrooms in the facility equals the overall number that would be required if the facility were newly constructed. Where toilet/bathrooms are part of patient bedrooms which are added or altered and required to be accessible, each such toilet/bathroom shall comply with 6.4.

6.2 Entrances. At least one accessible entrance that complies with 4.14 shall be protected from the weather by canopy or roof overhang. Such entrances shall incorporate a passenger loading zone that complies with 4.6.6.

6.3 Patient Bedrooms. Provide accessible patient bedrooms in compliance with 4.1 through 4.35. Accessible patient bedrooms shall comply with the following:

(1) Each bedroom shall have a door that complies with 4.13.

EXCEPTION: Entry doors to acute care hospital bedrooms for in-patients shall be exempted from the requirement in 4.13.6 for maneuvering space at the latch side of the door if the door is at least 44 in (1120 mm) wide.

(2) Each bedroom shall have adequate space to provide a maneuvering space that complies with 4.2.3. In rooms with 2 beds, it is preferable that this space be located between beds.

(3) Each bedroom shall have adequate space to provide a minimum clear floor space of 36 in (915 mm) along each side of the bed and to provide an accessible route complying with 4.3.3 to each side of each bed.

6.4 Patient Toilet Rooms. Where toilet/bath rooms are provided as a part of a patient bedroom, each patient bedroom that is required to be accessible shall have an accessible toilet/bath room that complies with 4.22 or 4.23 and shall be on an accessible route.

7. BUSINESS AND MERCANTILE.

7.1 General. In addition to the requirements of 4.1 to 4.35, the design of all areas used for business transactions with the public shall comply with 7.

7.2 Sales and Service Counters, Teller Windows, Information Counters.

(1) In department stores and miscellaneous retail stores where counters have cash registers and are provided for sales or distribution of goods or services to the public, at least one of each type shall have a portion of the counter which is at least 36 in (915 mm) in length with a maximum height of 36 in (915 mm) above the finish floor. It shall be on an accessible route complying with 4.3. The accessible counters must be dispersed throughout the building or facility. In alterations where it is technically infeasible to provide an accessible counter, an auxiliary counter meeting these requirements may be provided.

(2) At ticketing counters, teller stations in a bank, registration counters in hotels and motels, box office ticket counters, and other counters that may not have a cash register but at which goods or services are sold or distributed, either:

(i) a portion of the main counter which is a minimum of 36 in (915 mm) in length shall be provided with a maximum height of 36 in (915 mm); or

(ii) an auxiliary counter with a maximum height of 36 in (915 mm) in close proximity to the main counter shall be provided; or

(iii) equivalent facilitation shall be provided (e.g., at a hotel registration counter, equivalent facilitation might consist of: (1) provision of a folding shelf attached to the main counter on which an individual with disabilities can write, and (2) use of the space on the side of the counter or at the concierge desk, for handing materials back and forth).

All accessible sales and service counters shall be on an accessible route complying with 4.3.

(3)* Assistive Listening Devices. (Reserved)

8.0 Libraries

7.3* Check-out Aisles.

(1) In new construction, accessible check-out aisles shall be provided in conformance with the table below:

Total Check-out Aisles of Each Design	Minimum Number of Accessible Check-out Aisles (of each design)
1 - 4	1
5 - 8	2
9 - 15	3
over 15	3, plus 20% of additional aisles

EXCEPTION: In new construction, where the selling space is under 5000 square feet, only one check-out aisle is required to be accessible.

EXCEPTION: In alterations, at least one check-out aisle shall be accessible in facilities under 5000 square feet of selling space. In facilities of 5000 or more square feet of selling space, at least one of each design of check-out aisle shall be made accessible when altered until the number of accessible check-out aisles of each design equals the number required in new construction.

Examples of check-out aisles of different "design" include those which are specifically designed to serve different functions. Different "design" includes but is not limited to the following features - length of belt or no belt; or permanent signage designating the aisle as an express lane.

(2) Clear aisle width for accessible check-out aisles shall comply with 4.2.1 and maximum adjoining counter height shall not exceed 38 in (965 mm) above the finish floor. The top of the lip shall not exceed 40 in (1015 mm) above the finish floor

(3) Signage identifying accessible check-out aisles shall comply with 4.30.7 and shall be mounted above the check-out aisle in the same location where the check-out number or type of check-out is displayed.

7.4 Security Bollards. Any device used to prevent the removal of shopping carts from store premises shall not prevent access or egress to people in wheelchairs. An alternate entry that is equally convenient to that provided for the ambulatory population is acceptable.

8. LIBRARIES.

8.1 General. In addition to the requirements of 4.1 to 4.35, the design of all public areas of a library shall comply with 8, including reading and study areas, stacks, reference rooms, reserve areas, and special facilities or collections.

8.2 Reading and Study Areas. At least 5 percent or a minimum of one of each element of fixed seating, tables, or study carrels shall comply with 4.2 and 4.32. Clearances between fixed accessible tables and between study carrels shall comply with 4.3.

8.3 Check-Out Areas. At least one lane at each check-out area shall comply with 7.2(1). Any traffic control or book security gates or turnstiles shall comply with 4.13.

8.4 Card Catalogs and Magazine Displays. Minimum clear aisle space at card catalogs and magazine displays shall comply with Fig. 55. Maximum reach height shall comply with 4.2, with a height of 48 in (1220 mm) preferred irrespective of approach allowed.

8.5 Stacks. Minimum clear aisle width between stacks shall comply with 4.3, with a minimum clear aisle width of 42 in (1065 mm) preferred where possible. Shelf height in stack areas is unrestricted (see Fig. 56).

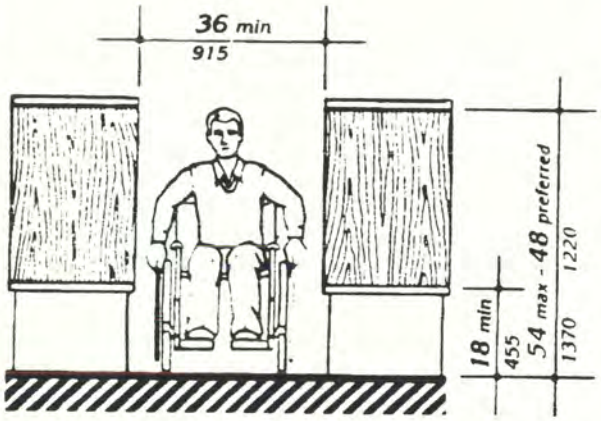

Fig. 55
Card Catalog

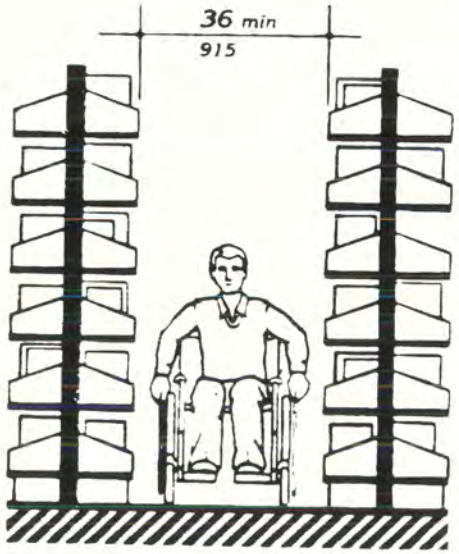

Fig. 56
Stacks

9. ACCESSIBLE TRANSIENT LODGING.

(1) Except as specified in the special technical provisions of this section, accessible transient lodging shall comply with the applicable requirements of 4.1 through 4.35. Transient lodging includes facilities or portions thereof used for sleeping accommodations, when not classed as a medical care facility.

9.1 Hotels, Motels, Inns, Boarding Houses, Dormitories, Resorts and Other Similar Places of Transient Lodging.

9.1.1 General. All public use and common use areas are required to be designed and constructed to comply with section 4 (Accessible Elements and Spaces: Scope and Technical Requirements).

EXCEPTION: Sections 9.1 through 9.4 do not apply to an establishment located within a building that contains not more than five rooms for rent or hire and that is actually occupied by the proprietor of such establishment as the residence of such proprietor.

9.1.2 Accessible Units, Sleeping Rooms, and Suites. Accessible sleeping rooms or suites that comply with the requirements of 9.2 (Requirements for Accessible Units, Sleeping Rooms, and Suites) shall be provided in conformance with the table below. In addition, in hotels, of 50 or more sleeping rooms or suites, additional accessible sleeping rooms or suites that include a roll-in shower shall also be provided in conformance with the table below. Such accommodations shall comply with the requirements of 9.2, 4.21, and Figure 57(a) or (b).

9.1.3 Sleeping Accommodations for Persons with Hearing Impairments

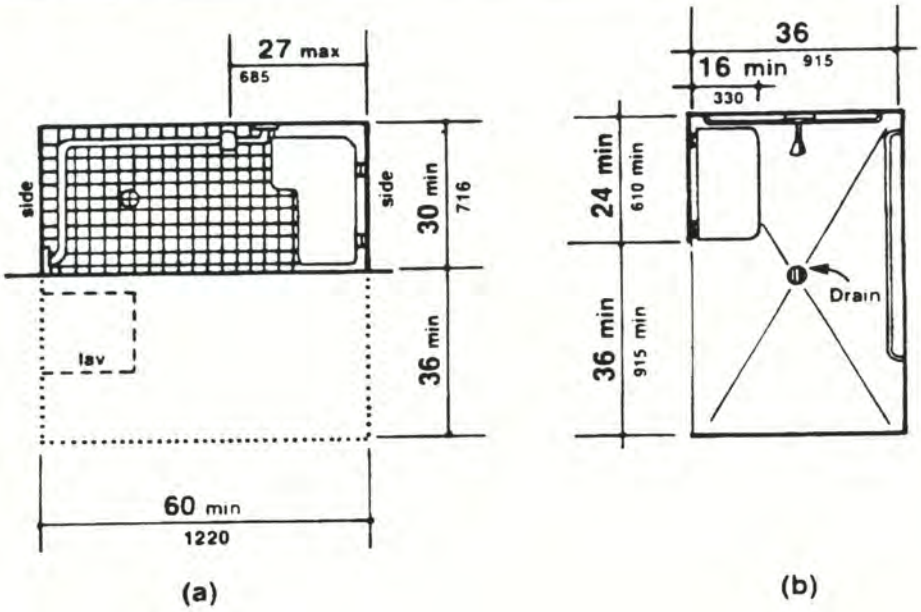

Fig. 57
Roll-in Shower with Folding Seat

Number of Rooms	Accessible Rooms	Rooms with Roll-in Showers
1 to 25	1	
26 to 50	2	
51 to 75	3	1
76 to 100	4	1
101 to 150	5	2
151 to 200	6	2
201 to 300	7	3
301 to 400	8	4
401 to 500	9	4 plus one for each additional 100 over 400
501 to 1000	2% of total	
1001 and over	20 plus 1 for each 100 over 1000	

9.1.3 Sleeping Accommodations for Persons with Hearing Impairments. In addition to those accessible sleeping rooms and suites required by 9.1.2, sleeping rooms and suites that comply with 9.3 (Visual Alarms, Notification Devices, and Telephones) shall be provided in conformance with the following table:

Number of Elements	Accessible Elements
1 to 25	1
26 to 50	2
51 to 75	3
76 to 100	4
101 to 150	5
151 to 200	6
201 to 300	7
301 to 400	8
401 to 500	9
501 to 1000	2% of total
1001 and over	20 plus 1 for each 100 over 1000

9.1.4 Classes of Sleeping Accommodations.

(1) In order to provide persons with disabilities a range of options equivalent to those available to other persons served by the facility, sleeping rooms and suites required to be accessible by 9.1.2 shall be dispersed among the various classes of sleeping accommodations available to patrons of the place of transient lodging. Factors to be considered include room size, cost, amenities provided, and the number of beds provided.

(2) Equivalent Facilitation. For purposes of this section, it shall be deemed equivalent facilitation if the operator of a facility elects to limit construction of accessible rooms to those intended for multiple occupancy, provided that such rooms are made available at the cost of a single-occupancy room to an individual with disabilities who requests a single-occupancy room.

9.1.5. Alterations to Accessible Units, Sleeping Rooms, and Suites. When sleeping rooms are being altered in an existing facility, or portion thereof, subject to the requirements of this section, at least one sleeping room or suite that complies with the requirements of 9.2 (Requirements for Accessible Units, Sleeping Rooms, and Suites) shall be provided for each 25 sleeping rooms, or fraction thereof, of rooms being altered until the number of such rooms provided equals the number required to be accessible with 9.1.2. In addition, at least one sleeping room or suite that complies with the requirements of 9.3 (Visual Alarms, Notification Devices, and Telephones) shall be provided for each 25 sleeping rooms, or fraction thereof, of rooms being altered until the number of such rooms equals the number required to be accessible by 9.1.3.

9.2 Requirements for Accessible Units, Sleeping Rooms and Suites.

9.2.1 General. Units, sleeping rooms, and suites required to be accessible by 9.1 shall comply with 9.2.

9.2.2 Minimum Requirements. An accessible unit, sleeping room or suite shall be on an accessible route complying with 4.3 and have the following accessible elements and spaces.

(1) Accessible sleeping rooms shall have a 36 in (915 mm) clear width maneuvering space located along both sides of a bed, except that where two beds are provided, this requirement can be met by providing a 36 in (915 mm) wide maneuvering space located between the two beds.

(2) An accessible route complying with 4.3 shall connect all accessible spaces and elements, including telephones, within the unit, sleeping room, or suite. This is not intended to require an elevator in multi-story units as long as the spaces identified in 9.2.2(6) and (7) are on accessible levels and the accessible sleeping area is suitable for dual occupancy.

(3) Doors and doorways designed to allow passage into and within all sleeping rooms, suites or other covered units shall comply with 4.13.

(4) If fixed or built-in storage facilities such as cabinets, shelves, closets, and drawers are provided in accessible spaces, at least one of each type provided shall contain storage space complying with 4.25. Additional storage may be provided outside of the dimensions required by 4.25.

(5) All controls in accessible units, sleeping rooms, and suites shall comply with 4.27.

(6) Where provided as part of an accessible unit, sleeping room, or suite, the following spaces shall be accessible and shall be on an accessible route:

(a) the living area.

(b) the dining area.

(c) at least one sleeping area.

(d) patios, terraces, or balconies.

EXCEPTION: The requirements of 4.13.8 and 4.3.8 do not apply where it is necessary to utilize a higher door threshold or a change in level to protect the integrity of the unit from wind/water damage. Where this exception results in patios, terraces or balconies that are not at an accessible level, equivalent facilitation

9.3 Visual Alarms, Notification Devices and Telephones

shall be provided. (E.g., equivalent facilitation at a hotel patio or balcony might consist of providing raised decking or a ramp to provide accessibility.)

(e) at least one full bathroom (i.e., one with a water closet, a lavatory, and a bathtub or shower).

(f) if only half baths are provided, at least one half bath.

(g) carports, garages or parking spaces.

(7) Kitchens, Kitchenettes, or Wet Bars. When provided as accessory to a sleeping room or suite, kitchens, kitchenettes, wet bars, or similar amenities shall be accessible. Clear floor space for a front or parallel approach to cabinets, counters, sinks, and appliances shall be provided to comply with 4.2.4. Countertops and sinks shall be mounted at a maximum height of 34 in (865 mm) above the floor. At least fifty percent of shelf space in cabinets or refrigerator/freezers shall be within the reach ranges of 4.2.5 or 4.2.6 and space shall be designed to allow for the operation of cabinet and/or appliance doors so that all cabinets and appliances are accessible and usable. Controls and operating mechanisms shall comply with 4.27.

(8) Sleeping room accommodations for persons with hearing impairments required by 9.1 and complying with 9.3 shall be provided in the accessible sleeping room or suite.

9.3 Visual Alarms, Notification Devices and Telephones.

9.3.1 General. In sleeping rooms required to comply with this section, auxiliary visual alarms shall be provided and shall comply with 4.28.4. Visual notification devices shall also be provided in units, sleeping rooms and suites to alert room occupants of incoming telephone calls and a door knock or bell. Notification devices shall not be connected to auxiliary visual alarm signal appliances. Permanently installed telephones shall have volume controls complying with 4.31.5; an accessible electrical outlet within 4 ft (1220 mm) of a telephone connection shall be provided to facilitate the use of a text telephone.

9.3.2 Equivalent Facilitation. For purposes of this section, equivalent facilitation shall include the installation of electrical outlets (including outlets connected to a facility's central alarm system) and telephone wiring in sleeping rooms and suites to enable persons with hearing impairments to utilize portable visual alarms and communication devices provided by the operator of the facility.

9.4 Other Sleeping Rooms and Suites.

Doors and doorways designed to allow passage into and within all sleeping units or other covered units shall comply with 4.13.5.

9.5 Transient Lodging in Homeless Shelters, Halfway Houses, Transient Group Homes, and Other Social Service Establishments.

9.5.1 New Construction. In new construction all public use and common use areas are required to be designed and constructed to comply with section 4. At least one of each type of amenity (such as washers, dryers and similar equipment installed for the use of occupants) in each common area shall be accessible and shall be located on an accessible route to any accessible unit or sleeping accommodation.

EXCEPTION: Where elevators are not provided as allowed in 4.1.3(5), accessible amenities are not required on inaccessible floors as long as one of each type is provided in common areas on accessible floors.

9.5.2 Alterations.

(1) Social service establishments which are not homeless shelters:

(a) The provisions of 9.5.3 and 9.1.5 shall apply to sleeping rooms and beds.

(b) Alteration of other areas shall be consistent with the new construction provisions of 9.5.1.

(2) Homeless shelters. If the following elements are altered, the following requirements apply:

APPENDIX

This appendix contains *materials of an advisory nature* and provides additional information that should help the reader to understand the minimum requirements of the *guidelines* or to design buildings or facilities for greater accessibility. The paragraph numbers correspond to the sections or paragraphs of the *guideline* to which the material relates and are therefore not consecutive (for example, A4.2.1 contains additional information relevant to 4.2.1). Sections *of the guidelines* for which additional material appears in this appendix have been indicated by an asterisk. *Nothing in this appendix shall in any way obviate any obligation to comply with the requirements of the guidelines itself.*

A2.2 Equivalent Facilitation. *Specific examples of equivalent facilitation are found in the following sections:*

4.1.6(3)(c)	*Elevators in Alterations*
4.31.9	*Text Telephones*
7.2	*Sales and Service Counters, Teller Windows, Information Counters*
9.1.4	*Classes of Sleeping Accommodations*
9.2.2(6)(d)	*Requirements for Accessible Units, Sleeping Rooms, and Suites*

A4.1.1 Application.

A4.1.1(3) Areas Used Only by Employees as Work Areas. *Where there are a series of individual work stations of the same type (e.g., laboratories, service counters, ticket booths), 5%, but not less than one, of each type of work station should be constructed so that an individual with disabilities can maneuver within the work stations. Rooms housing individual offices in a typical office building must meet the requirements of the guidelines concerning doors, accessible routes, etc. but do not need to allow for maneuvering space around individual desks. Modifications required to permit maneuvering within the work area may be accomplished as a reasonable accommodation to individual employees with disabilities under Title I of the ADA. Consideration should also be given to placing shelves in employee work areas at a convenient height for accessibility or installing commercially available shelving that is adjustable so that reasonable accommodations can be made in the future.*

If work stations are made accessible they should comply with the applicable provisions of 4.2 through 4.35.

A4.1.2 Accessible Sites and Exterior Facilities: New Construction.

A4.1.2(5)(e) Valet Parking. *Valet parking is not always usable by individuals with disabilities. For instance, an individual may use a type of vehicle controls that render the regular controls inoperable or the driver's seat in a van may be removed. In these situations, another person cannot park the vehicle. It is recommended that some self-parking spaces be provided at valet parking facilities for individuals whose vehicles cannot be parked by another person and that such spaces be located on an accessible route to the entrance of the facility.*

A4.1.3 Accessible Buildings: New Construction.

A4.1.3(5) *Only full passenger elevators are covered by the accessibility provisions of 4.10. Materials and equipment hoists, freight elevators not intended for passenger use, dumbwaiters, and construction elevators are not covered by these guidelines. If a building is exempt from the elevator requirement, it is not necessary to provide a platform lift or other means of vertical access in lieu of an elevator.*

Under Exception 4, platform lifts are allowed where existing conditions make it impractical to install a ramp or elevator. Such conditions generally occur where it is essential to provide access to small raised or lowered areas where space may not be available for a ramp. Examples include, but are not limited to, raised pharmacy platforms, commercial offices raised above a sales floor, or radio and news booths.

A4.1.3(9) *Supervised automatic sprinkler systems have built in signals for monitoring features of the system such as the opening and closing of water control valves, the power supplies for needed pumps, water tank levels, and for indicating conditions that will impair the satisfactory operation of the sprinkler system.*

10.3 Fixed Facilities and Stations

that are sized to the maximum dimensions permitted under legitimate local, state or federal regulations or ordinances shall be considered in compliance with 4.30.2 and 4.30.3 for purposes of this section.

EXCEPTION: Bus schedules, timetables, or maps that are posted at the bus stop or bus bay are not required to comply with this provision.

10.2.2 Bus Stop Siting and Alterations.

(1) Bus stop sites shall be chosen such that, to the maximum extent practicable, the areas where lifts or ramps are to be deployed comply with section 10.2.1(1) and (2).

(2) When new bus route identification signs are installed or old signs are replaced, they shall comply with the requirements of 10.2.1(3).

10.3 Fixed Facilities and Stations.

10.3.1 New Construction. New stations in rapid rail, light rail, commuter rail, intercity bus, intercity rail, high speed rail, and other fixed guideway systems (e.g., automated guideway transit, monorails, etc.) shall comply with the following provisions, as applicable:

(1) Elements such as ramps, elevators or other circulation devices, fare vending or other ticketing areas, and fare collection areas shall be placed to minimize the distance which wheelchair users and other persons who cannot negotiate steps may have to travel compared to the general public. The circulation path, including an accessible entrance and an accessible route, for persons with disabilities shall, to the maximum extent practicable, coincide with the circulation path for the general public. Where the circulation path is different, signage complying with 4.30.1, 4.30.2, 4.30.3, 4.30.5, and 4.30.7(1) shall be provided to indicate direction to and identify the accessible entrance and accessible route.

(2) In lieu of compliance with 4.1.3(8), at least one entrance to each station shall comply with 4.14, Entrances. If different entrances to a station serve different transportation fixed routes or groups of fixed routes, at least one entrance serving each group or route shall comply with 4.14, Entrances. All accessible entrances shall, to the maximum extent practicable, coincide with those used by the majority of the general public.

(3) Direct connections to commercial, retail, or residential facilities shall have an accessible route complying with 4.3 from the point of connection to boarding platforms and all transportation system elements used by the public. Any elements provided to facilitate future direct connections shall be on an accessible route connecting boarding platforms and all transportation system elements used by the public.

(4) Where signs are provided at entrances to stations identifying the station or the entrance, or both, at least one sign at each entrance shall comply with 4.30.4 and 4.30.6. Such signs shall be placed in uniform locations at entrances within the transit system to the maximum extent practicable.

EXCEPTION: Where the station has no defined entrance, but signage is provided, then the accessible signage shall be placed in a central location.

(5) Stations covered by this section shall have identification signs complying with 4.30.1, 4.30.2, 4.30.3, and 4.30.5. Signs shall be placed at frequent intervals and shall be clearly visible from within the vehicle on both sides when not obstructed by another train. When station identification signs are placed close to vehicle windows (i.e., on the side opposite from boarding) each shall have the top of the highest letter or symbol below the top of the vehicle window and the bottom of the lowest letter or symbol above the horizontal mid-line of the vehicle window.

(6) Lists of stations, routes, or destinations served by the station and located on boarding areas, platforms, or mezzanines shall comply with 4.30.1, 4.30.2, 4.30.3, and 4.30.5. A minimum of one sign identifying the specific station and complying with 4.30.4 and 4.30.6 shall be provided on each platform or boarding area. All signs referenced in this paragraph shall, to the maximum extent practicable, be placed in uniform locations within the transit system.

10.3 Fixed Facilities and Stations

(7)* Automatic fare vending, collection and adjustment (e.g., add-fare) systems shall comply with 4.34.2, 4.34.3, and 4.34.4. At each accessible entrance such devices shall be located on an accessible route. If self-service fare collection devices are provided for the use of the general public, at least one accessible device for entering, and at least one for exiting, unless one device serves both functions, shall be provided at each accessible point of entry or exit. Accessible fare collection devices shall have a minimum clear opening width of 32 inches; shall permit passage of a wheelchair; and, where provided, coin or card slots and controls necessary for operation shall comply with 4.27. Gates which must be pushed open by wheelchair or mobility aid users shall have a smooth continuous surface extending from 2 inches above the floor to 27 inches above the floor and shall comply with 4.13. Where the circulation path does not coincide with that used by the general public, accessible fare collection systems shall be located at or adjacent to the accessible point of entry or exit.

(8) Platform edges bordering a drop-off and not protected by platform screens or guard rails shall have a detectable warning. Such detectable warnings shall comply with 4.29.2 and shall be 24 inches wide running the full length of the platform drop-off.

(9) In stations covered by this section, rail-to-platform height in new stations shall be coordinated with the floor height of new vehicles so that the vertical difference, measured when the vehicle is at rest, is within plus or minus 5/8 inch under normal passenger load conditions. For rapid rail, light rail, commuter rail, high speed rail, and intercity rail systems in new stations, the horizontal gap, measured when the new vehicle is at rest, shall be no greater than 3 inches. For slow moving automated guideway "people mover" transit systems, the horizontal gap in new stations shall be no greater than 1 inch.

EXCEPTION 1: Existing vehicles operating in new stations may have a vertical difference with respect to the new platform within plus or minus 1-1/2 inches.

EXCEPTION 2: In light rail, commuter rail and intercity rail systems where it is not operationally or structurally feasible to meet the horizontal gap or vertical difference requirements, mini-high platforms, car-borne or platform-mounted lifts, ramps or bridge plates, or similar manually deployed devices, meeting the applicable requirements of 36 CFR part 1192, or 49 CFR part 38 shall suffice.

(10) Stations shall not be designed or constructed so as to require persons with disabilities to board or alight from a vehicle at a location other than one used by the general public.

(11) Illumination levels in the areas where signage is located shall be uniform and shall minimize glare on signs. Lighting along circulation routes shall be of a type and configuration to provide uniform illumination.

(12) Text Telephones: The following shall be provided in accordance with 4.31.9:

(a) If an interior public pay telephone is provided in a transit facility (as defined by the Department of Transportation) at least one interior public text telephone shall be provided in the station.

(b) Where four or more public pay telephones serve a particular entrance to a rail station and at least one is in an interior location, at least one interior public text telephone shall be provided to serve that entrance. Compliance with this section constitutes compliance with section 4.1.3(17)(c).

(13) Where it is necessary to cross tracks to reach boarding platforms, the route surface shall be level and flush with the rail top at the outer edge and between the rails, except for a maximum 2-1/2 inch gap on the inner edge of each rail to permit passage of wheel flanges. Such crossings shall comply with 4.29.5. Where gap reduction is not practicable, an above-grade or below-grade accessible route shall be provided.

(14) Where public address systems are provided to convey information to the public in terminals, stations, or other fixed facilities, a means of conveying the same or equivalent information to persons with hearing loss or who are deaf shall be provided.

10.3.2 Existing Facilities: Key Stations.

(15) Where clocks are provided for use by the general public, the clock face shall be uncluttered so that its elements are clearly visible. Hands, numerals, and/or digits shall contrast with the background either light-on-dark or dark-on-light. Where clocks are mounted overhead, numerals and/or digits shall comply with 4.30.3. Clocks shall be placed in uniform locations throughout the facility and system to the maximum extent practicable.

(16) Where provided in below grade stations, escalators shall have a minimum clear width of 32 inches. At the top and bottom of each escalator run, at least two contiguous treads shall be level beyond the comb plate before the risers begin to form. All escalator treads shall be marked by a strip of clearly contrasting color, 2 inches in width, placed parallel to and on the nose of each step. The strip shall be of a material that is at least as slip resistant as the remainder of the tread. The edge of the tread shall be apparent from both ascending and descending directions.

(17) Where provided, elevators shall be glazed or have transparent panels to allow an unobstructed view both in to and out of the car. Elevators shall comply with 4.10.

EXCEPTION: Elevator cars with a clear floor area in which a 60 inch diameter circle can be inscribed may be substituted for the minimum car dimensions of 4.10, Fig. 22.

(18) Where provided, ticketing areas shall permit persons with disabilities to obtain a ticket and check baggage and shall comply with 7.2.

(19) Where provided, baggage check-in and retrieval systems shall be on an accessible route complying with 4.3, and shall have space immediately adjacent complying with 4.2. If unattended security barriers are provided, at least one gate shall comply with 4.13. Gates which must be pushed open by wheelchair or mobility aid users shall have a smooth continuous surface extending from 2 inches above the floor to 27 inches above the floor.

10.3.2 Existing Facilities: Key Stations.

(1) Rapid, light and commuter rail key stations, as defined under criteria established by the Department of Transportation in subpart C of 49 CFR part 37 and existing intercity rail stations shall provide at least one accessible route from an accessible entrance to those areas necessary for use of the transportation system.

(2) The accessible route required by 10.3.2(1) shall include the features specified in 10.3.1 (1), (4)-(9), (11)-(15), and (17)-(19).

(3) Where technical infeasibility in existing stations requires the accessible route to lead from the public way to a paid area of the transit system, an accessible fare collection system, complying with 10.3.1(7), shall be provided along such accessible route.

(4) In light rail, rapid rail and commuter rail key stations, the platform or a portion thereof and the vehicle floor shall be coordinated so that the vertical difference, measured when the vehicle is at rest, is within plus or minus 1-1/2 inches under all normal passenger load conditions, and the horizontal gap, measured when the vehicle is at rest, is no greater than 3 inches for at least one door of each vehicle or car required to be accessible by 49 CFR part 37.

EXCEPTION 1: Existing vehicles retrofitted to meet the requirements of 49 CFR 37.93 (one-car-per-train rule) shall be coordinated with the platform such that, for at least one door, the vertical difference between the vehicle floor and the platform, measured when the vehicle is at rest with 50% normal passenger capacity, is within plus or minus 2 inches and the horizontal gap is no greater than 4 inches.

EXCEPTION 2: Where it is not structurally or operationally feasible to meet the horizontal gap or vertical difference requirements, mini-high platforms, car-borne or platform mounted lifts, ramps or bridge plates, or similar manually deployed devices, meeting the applicable requirements of 36 CFR part 1192, or 49 CFR part 38, shall suffice.

(5) New direct connections to commercial, retail, or residential facilities shall, to the maximum extent feasible, have an accessible route complying with 4.3 from the point of connection to boarding platforms and all transportation system elements used by the public. Any elements provided to facilitate future direct connections shall be on an accessible route connecting boarding platforms and all transportation system elements used by the public.

10.3.3 Existing Facilities: Alterations.

(1) For the purpose of complying with 4.1.6(2) Alterations to an Area Containing a Primary Function, an area of primary function shall be as defined by applicable provisions of 49 CFR 37.43(c) (Department of Transportation's ADA Rule) or 28 CFR 36.403 (Department of Justice's ADA Rule).

10.4. Airports.

10.4.1 New Construction.

(1) Elements such as ramps, elevators or other vertical circulation devices, ticketing areas, security checkpoints, or passenger waiting areas shall be placed to minimize the distance which wheelchair users and other persons who cannot negotiate steps may have to travel compared to the general public.

(2) The circulation path, including an accessible entrance and an accessible route, for persons with disabilities shall, to the maximum extent practicable, coincide with the circulation path for the general public. Where the circulation path is different, directional signage complying with 4.30.1, 4.30 2, 4.30.3 and 4.30.5 shall be provided which indicates the location of the nearest accessible entrance and its accessible route.

(3) Ticketing areas shall permit persons with disabilities to obtain a ticket and check baggage and shall comply with 7.2.

(4) Where public pay telephones are provided, and at least one is at an interior location, a public text telephone shall be provided in compliance with 4.31.9. Additionally, if four or more public pay telephones are located in any of the following locations, at least one public text telephone shall also be provided in that location:

(a) a main terminal outside the security areas;
(b) a concourse within the security areas; or
(c) a baggage claim area in a terminal.

Compliance with this section constitutes compliance with section 4.1.3(17)(c).

(5) Baggage check-in and retrieval systems shall be on an accessible route complying with 4.3, and shall have space immediately adjacent complying with 4.2.4. If unattended security barriers are provided, at least one gate shall comply with 4.13. Gates which must be pushed open by wheelchair or mobility aid users shall have a smooth continuous surface extending from 2 inches above the floor to 27 inches above the floor.

(6) Terminal information systems which broadcast information to the general public through a public address system shall provide a means to provide the same or equivalent information to persons with a hearing loss or who are deaf. Such methods may include, but are not limited to, visual paging systems using video monitors and computer technology. For persons with certain types of hearing loss such methods may include, but are not limited to, an assistive listening system complying with 4.33.7.

(7) Where clocks are provided for use by the general public the clock face shall be uncluttered so that its elements are clearly visible. Hands, numerals, and/or digits shall contrast with their background either light-on-dark or dark-on-light. Where clocks are mounted overhead, numerals and/or digits shall comply with 4.30.3. Clocks shall be placed in uniform locations throughout the facility to the maximum extent practicable.

(8) Security Systems. [Reserved]

10.5 Boat and Ferry Docks.
[Reserved]

[The next page is Appendix IV, Page 281.]

APPENDIX

This appendix contains *materials of an advisory nature* and provides additional information that should help the reader to understand the minimum requirements of the *guidelines* or to design buildings or facilities for greater accessibility. The paragraph numbers correspond to the sections or paragraphs of the *guideline* to which the material relates and are therefore not consecutive (for example, A4.2.1 contains additional information relevant to 4.2.1). Sections *of the guidelines* for which additional material appears in this appendix have been indicated by an asterisk. *Nothing in this appendix shall in any way obviate any obligation to comply with the requirements of the guidelines itself.*

A2.2 Equivalent Facilitation. *Specific examples of equivalent facilitation are found in the following sections:*

4.1.6(3)(c)	*Elevators in Alterations*
4.31.9	*Text Telephones*
7.2	*Sales and Service Counters, Teller Windows, Information Counters*
9.1.4	*Classes of Sleeping Accommodations*
9.2.2(6)(d)	*Requirements for Accessible Units, Sleeping Rooms, and Suites*

A4.1.1 Application.

A4.1.1(3) Areas Used Only by Employees as Work Areas. *Where there are a series of individual work stations of the same type (e.g., laboratories, service counters, ticket booths), 5%, but not less than one, of each type of work station should be constructed so that an individual with disabilities can maneuver within the work stations. Rooms housing individual offices in a typical office building must meet the requirements of the guidelines concerning doors, accessible routes, etc. but do not need to allow for maneuvering space around individual desks. Modifications required to permit maneuvering within the work area may be accomplished as a reasonable accommodation to individual employees with disabilities under Title I of the ADA. Consideration should also be given to placing shelves in employee work areas at a convenient height for accessibility or installing commercially available shelving that is adjustable so that reasonable accommodations can be made in the future.*

If work stations are made accessible they should comply with the applicable provisions of 4.2 through 4.35.

A4.1.2 Accessible Sites and Exterior Facilities: New Construction.

A4.1.2(5)(e) Valet Parking. *Valet parking is not always usable by individuals with disabilities. For instance, an individual may use a type of vehicle controls that render the regular controls inoperable or the driver's seat in a van may be removed. In these situations, another person cannot park the vehicle. It is recommended that some self-parking spaces be provided at valet parking facilities for individuals whose vehicles cannot be parked by another person and that such spaces be located on an accessible route to the entrance of the facility.*

A4.1.3 Accessible Buildings: New Construction.

A4.1.3(5) *Only full passenger elevators are covered by the accessibility provisions of 4.10. Materials and equipment hoists, freight elevators not intended for passenger use, dumbwaiters, and construction elevators are not covered by these guidelines. If a building is exempt from the elevator requirement, it is not necessary to provide a platform lift or other means of vertical access in lieu of an elevator.*

Under Exception 4, platform lifts are allowed where existing conditions make it impractical to install a ramp or elevator. Such conditions generally occur where it is essential to provide access to small raised or lowered areas where space may not be available for a ramp. Examples include, but are not limited to, raised pharmacy platforms, commercial offices raised above a sales floor, or radio and news booths.

A4.1.3(9) *Supervised automatic sprinkler systems have built in signals for monitoring features of the system such as the opening and closing of water control valves, the power supplies for needed pumps, water tank levels, and for indicating conditions that will impair the satisfactory operation of the sprinkler system.*

A4.2 Space Allowances and Reach Ranges

Because of these monitoring features, supervised automatic sprinkler systems have a high level of satisfactory performance and response to fire conditions.

A4.1.3(10) *If an odd number of drinking fountains is provided on a floor, the requirement in 4.1.3(10)(b) may be met by rounding down the odd number to an even number and calculating 50% of the even number. When more than one drinking fountain on a floor is required to comply with 4.15, those fountains should be dispersed to allow wheelchair users convenient access. For example, in a large facility such as a convention center that has water fountains at several locations on a floor, the accessible water fountains should be located so that wheelchair users do not have to travel a greater distance than other people to use a drinking fountain.*

A4.1.3(17)(b) *In addition to the requirements of section 4.1.3(17)(b), the installation of additional volume controls is encouraged. Volume controls may be installed on any telephone.*

A4.1.3(19)(a) *Readily removable or folding seating units may be installed in lieu of providing an open space for wheelchair users. Folding seating units are usually two fixed seats that can be easily folded into a fixed center bar to allow for one or two open spaces for wheelchair users when necessary. These units are more easily adapted than removable seats which generally require the seat to be removed in advance by the facility management.*

Either a sign or a marker placed on seating with removable or folding arm rests is required by this section. Consideration should be given for ensuring identification of such seats in a darkened theater. For example, a marker which contrasts (light on dark or dark on light) and which also reflects light could be placed on the side of such seating so as to be visible in a lighted auditorium and also to reflect light from a flashlight.

A4.1.6 Accessible Buildings: Alterations.

A4.1.6(1)(h) *When an entrance is being altered, it is preferable that those entrances being altered be made accessible to the extent feasible.*

A4.2 Space Allowances and Reach Ranges.

A4.2.1 Wheelchair Passage Width.

(1) Space Requirements for Wheelchairs. Many persons who use wheelchairs need a 30 in (760 mm) clear opening width for doorways, gates, and the like, when the latter are entered head-on. If the *person* is unfamiliar with a building, if competing traffic is heavy, if sudden or frequent movements are needed, or if the wheelchair must be turned at an opening, then greater clear widths are needed. For most situations, the addition of an inch of leeway on either side is sufficient. Thus, a minimum clear width of 32 in (815 mm) will provide adequate clearance. However, when an opening or a restriction in a passageway is more than 24 in (610 mm) long, it is essentially a passageway and must be at least 36 in (915 mm) wide.

(2) Space Requirements for Use of Walking Aids. Although people who use walking aids can maneuver through clear width openings of 32 in (815 mm), they need 36 in (915 mm) wide passageways and walks for comfortable gaits. Crutch tips, often extending down at a wide angle, are a hazard in narrow passageways where they might not be seen by other pedestrians. Thus, the 36 in (915 mm) width provides a safety allowance both for the person *with a disability* and for others.

(3) Space Requirements for Passing. Able-bodied *persons* in winter clothing, walking

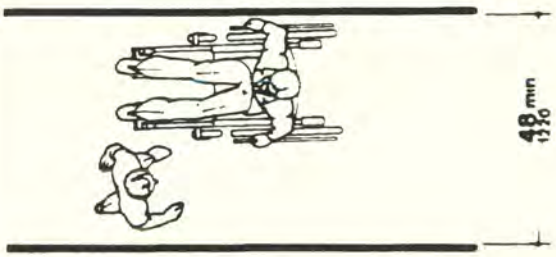

Fig. A1
Minimum Passage Width for One Wheelchair and One Ambulatory Person

A4.2 Space Allowances and Reach Ranges

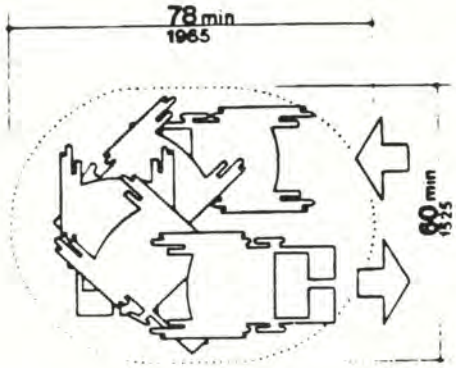

Fig. A2
Space Needed for Smooth U-Turn in a Wheelchair

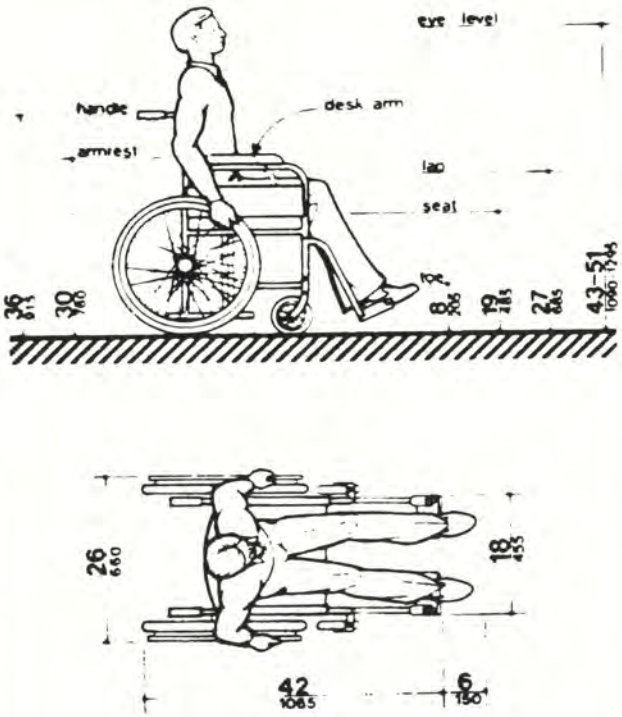

NOTE: Footrests may extend further for tall people

Fig. A3
Dimensions of Adult-Sized Wheelchairs

straight ahead with arms swinging, need 32 in (815 mm) of width, which includes 2 in (50 mm) on either side for sway, and another 1 in (25 mm) tolerance on either side for clearing nearby objects or other pedestrians. Almost all wheelchair users and those who use walking aids can also manage within this 32 in (815 mm) width for short distances. Thus, two streams of traffic can pass in 64 in (1625 mm) in a comfortable flow. Sixty inches (1525 mm) provides a minimum width for a somewhat more restricted flow. If the clear width is less than 60 in (1525 mm), two wheelchair users will not be able to pass but will have to seek a wider place for passing. Forty-eight inches (1220 mm) is the minimum width needed for an ambulatory person to pass a nonambulatory or semi-ambulatory person. Within this 48 in (1220 mm) width, the ambulatory person will have to twist to pass a wheelchair user, a person with a *service animal*, or a

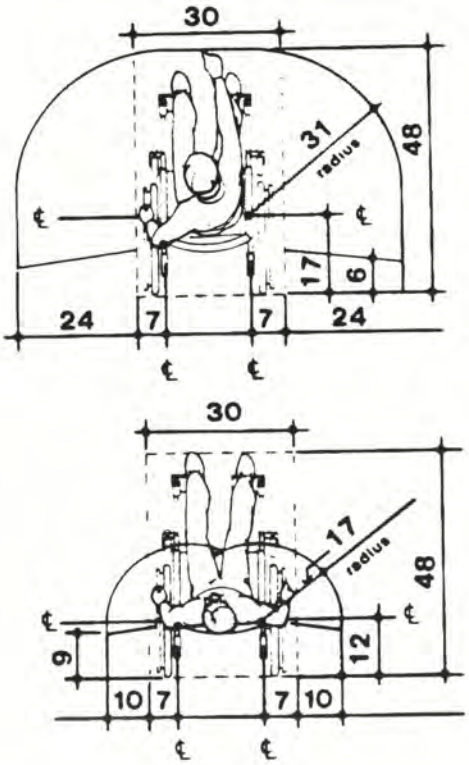

Fig. A3 (a)

A4.3 Accessible Route

semi-ambulatory person. There will be little leeway for swaying or missteps (see Fig. A1).

A4.2.3 Wheelchair Turning Space. *These guidelines specify* a minimum space of 60 in (1525 mm) diameter *or a 60 in by 60 in (1525 mm by 1525 mm) T-shaped space* for a pivoting 180-degree turn of a wheelchair. This space is usually satisfactory for turning around, but many people will not be able to turn without repeated tries and bumping into surrounding objects. The space shown in Fig. A2 will allow most wheelchair users to complete U-turns without difficulty.

A4.2.4 Clear Floor or Ground Space for Wheelchairs. The wheelchair and user shown in Fig. A3 represent typical dimensions for a large adult male. The space requirements in this *guideline* are based upon maneuvering clearances that will accommodate most wheelchairs. Fig. A3 provides a uniform reference for design not covered by this *guideline*.

A4.2.5 & A4.2.6 Reach. *Reach ranges for persons seated in wheelchairs may be further clarified by Fig. A3(a). These drawings approximate in the plan view the information shown in Fig. 4, 5, and 6.*

A4.3 Accessible Route.

A4.3.1 General.

(1) Travel Distances. Many people with mobility impairments can move at only very slow speeds; for many, traveling 200 ft (61 m) could take about 2 minutes. This assumes a rate of about 1.5 ft/s (455 mm/s) on level ground. It also assumes that the traveler would move continuously. However, on trips over 100 ft (30 m), disabled people are apt to rest frequently, which substantially increases their trip times. Resting periods of 2 minutes for every 100 ft (30 m) can be used to estimate travel times for people with severely limited stamina. In inclement weather, slow progress and resting can greatly increase a disabled person's exposure to the elements.

(2) Sites. Level, indirect routes or those with running slopes lower than 1:20 can sometimes provide more convenience than direct routes with maximum allowable slopes or with ramps.

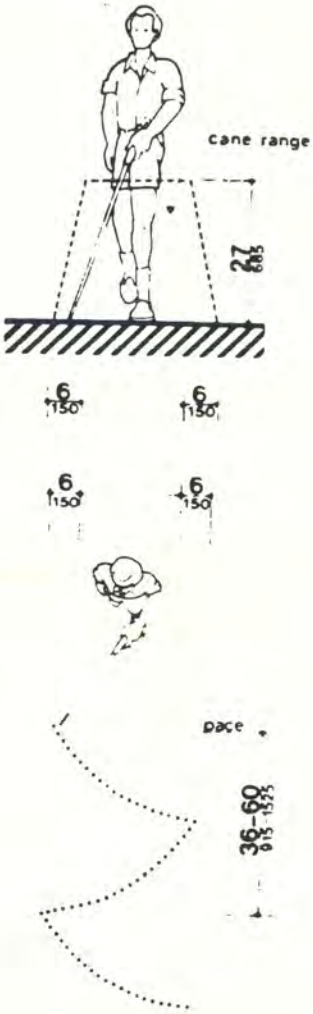

Fig. A4
Cane Technique

A4.3.10 Egress. Because people with disabilities may visit, be employed or be a resident in any building, emergency management plans with specific provisions to ensure their safe evacuation also play an essential role in fire safety and life safety.

A4.3.11.3 Stairway Width. *A 48 inch (1220 mm) wide exit stairway is needed to allow assisted evacuation (e.g., carrying a person in a wheelchair) without encroaching on the exit path for ambulatory persons.*

A4.3.11.4 Two-way Communication. *It is essential that emergency communication not be dependent on voice communications alone because the safety of people with hearing or speech impairments could be jeopardized. The visible signal requirement could be satisfied with something as simple as a button in the area of rescue assistance that lights, indicating that help is on the way, when the message is answered at the point of entry.*

A4.4 Protruding Objects.

A4.4.1 General. *Service animals* are trained to recognize and avoid hazards. However, most people with severe impairments of vision use the long cane as an aid to mobility. The two principal cane techniques are the touch technique, where the cane arcs from side to side and touches points outside both shoulders; and the diagonal technique, where the cane is held in a stationary position diagonally across the body with the cane tip touching or just above the ground at a point outside one shoulder and the handle or grip extending to a point outside the other shoulder. The touch technique is used primarily in uncontrolled areas, while the diagonal technique is used primarily in certain limited, controlled, and familiar environments. Cane users are often trained to use both techniques.

Potential hazardous objects are noticed only if they fall within the detection range of canes (see Fig. A4). Visually impaired people walking toward an object can detect an overhang if its lowest surface is not higher than 27 in (685 mm). When walking alongside *protruding* objects, they cannot detect overhangs. Since proper cane and *service animal* techniques keep people away from the edge of a path or from walls, a slight overhang of no more than 4 in (100 mm) is not hazardous.

A4.5 Ground and Floor Surfaces.

A4.5.1 General. *People who have difficulty walking or* maintaining balance *or who use crutches, canes, or walkers,* and those with restricted gaits are particularly sensitive to slipping and tripping hazards. For such people, a stable and regular surface is necessary for safe walking, particularly on stairs. Wheelchairs can be propelled most easily on surfaces that are hard, stable, and regular. Soft loose surfaces such as shag carpet, loose sand or gravel, wet clay, and irregular surfaces such as cobblestones can significantly impede wheelchair movement.

Slip resistance is based on the frictional force necessary to keep a shoe heel or crutch tip from slipping on a walking surface under conditions likely to be found on the surface. *While the dynamic coefficient of friction during walking varies in a complex and non-uniform way, the static coefficient of friction, which can be measured in several ways, provides a close approximation of the slip resistance of a surface. Contrary to popular belief, some slippage is necessary to walking, especially for persons with restricted gaits; a truly "non-slip" surface could not be negotiated.*

The Occupational Safety and Health Administration recommends that walking surfaces have a static coefficient of friction of 0.5. A research project sponsored by the Architectural and Transportation Barriers Compliance Board (Access Board) conducted tests with persons with disabilities and concluded that a higher coefficient of friction was needed by such persons. A static coefficient of friction of 0.6 is recommended for accessible routes and 0.8 for ramps.

It is recognized that the coefficient of friction varies considerably due to the presence of contaminants, water, floor finishes, and other factors not under the control of the designer or builder and not subject to design and construction guidelines and that compliance would be difficult to measure on the building site. Nevertheless, many common building materials suitable for flooring are now labeled with information on the static coefficient of friction. While it may not be possible to compare one product directly with another, or to guarantee a constant measure, builders and designers are encouraged to specify materials with appropriate values. As more products include information on slip resistance, improved uniformity in measurement and specification is likely. The Access Board's advisory guidelines on Slip Resistant Surfaces provides additional information on this subject.

Cross slopes on walks and ground or floor surfaces can cause considerable difficulty in propelling a wheelchair in a straight line.

A4.6 Parking and Passenger Loading Zones

A4.5.3 Carpet. Much more needs to be done in developing both quantitative and qualitative criteria for carpeting *(i.e., problems associated with texture and weave need to be studied).* However, certain functional characteristics are well established. When both carpet and padding are used, it is desirable to have minimum movement (preferably none) between the floor and the pad and the pad and the carpet which would allow the carpet to hump or warp. In heavily trafficked areas, a thick, soft (plush) pad or cushion, particularly in combination with long carpet pile, makes it difficult for individuals in wheelchairs and those with other ambulatory disabilities to get about. Firm carpeting can be achieved through proper selection and combination of pad and carpet, sometimes with the elimination of the pad or cushion, and with proper installation. *Carpeting designed with a weave that causes a zig-zag effect when wheeled across is strongly discouraged.*

A4.6 Parking and Passenger Loading Zones.

A4.6.3 Parking Spaces. *The increasing use of vans with side-mounted lifts or ramps by persons with disabilities has necessitated some revisions in specifications for parking spaces and adjacent access aisles. The typical accessible parking space is 96 in (2440 mm) wide with an adjacent 60 in (1525 mm) access aisle. However, this aisle does not permit lifts or ramps to be deployed and still leave room for a person using a wheelchair or other mobility aid to exit the lift platform or ramp. In tests conducted with actual lift/van/wheelchair combinations, (under a Board-sponsored Accessible Parking and Loading Zones Project) researchers found that a space and aisle totaling almost 204 in (5180 mm) wide was needed to deploy a lift and exit conveniently. The "van accessible" parking space required by these guidelines provides a 96 in (2440 mm) wide space with a 96 in (2440 mm) adjacent access aisle which is just wide enough to maneuver and exit from a side mounted lift. If a 96 in (2440 mm) access aisle is placed between two spaces, two "van accessible" spaces are created. Alternatively, if the wide access aisle is provided at the end of a row (an area often unused), it may be possible to provide the wide access aisle without additional space (see Fig. A5(a)).*

A sign is needed to alert van users to the presence of the wider aisle, but the space is not intended to be restricted only to vans.

"Universal" Parking Space Design. An alternative to the provision of a percentage of spaces with a wide aisle, and the associated need to include additional signage, is the use of what has been called the "universal" parking space design. In this design, all accessible spaces are 132 in (3350 mm) wide with a 60 in (1525 mm) access aisle (see Fig. A5(b)). One

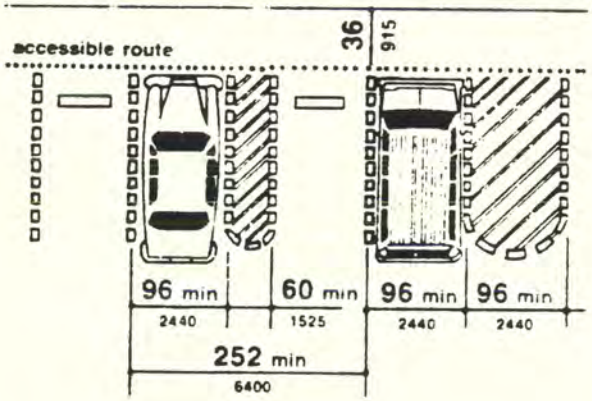

(a)
Van Accessible Space at End Row

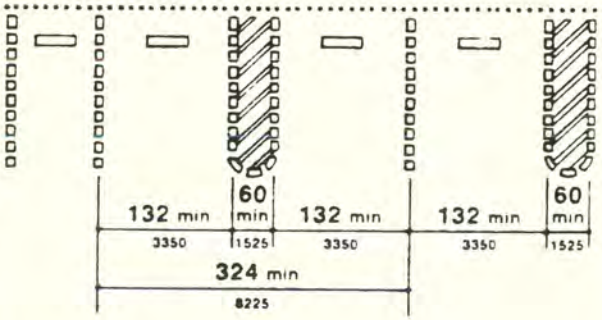

(b)
Universal Parking Space Design

Fig. A5
Parking Space Alternatives

advantage to this design is that no additional signage is needed because all spaces can accommodate a van with a side-mounted lift or ramp. Also, there is no competition between cars and vans for spaces since all spaces can accommodate either. Furthermore, the wider space permits vehicles to park to one side or the other within the 132 in (3350 mm) space to allow persons to exit and enter the vehicle on either the driver or passenger side, although, in some cases, this would require exiting or entering without a marked access aisle.

An essential consideration for any design is having the access aisle level with the parking space. Since a person with a disability, using a lift or ramp, must maneuver within the access aisle, the aisle cannot include a ramp or sloped area. The access aisle must be connected to an accessible route to the appropriate accessible entrance of a building or facility. The parking access aisle must either blend with the accessible route or have a curb ramp complying with 4.7. Such a curb ramp opening must be located within the access aisle boundaries, not within the parking space boundaries. Unfortunately, many facilities are designed with a ramp that is blocked when any vehicle parks in the accessible space. Also, the required dimensions of the access aisle cannot be restricted by planters, curbs or wheel stops.

A4.6.4 Signage. Signs designating parking places for disabled people can be seen from a driver's seat if the signs are mounted high enough above the ground and located at the front of a parking space.

A4.6.5 Vertical Clearance. High-top vans, which disabled people or transportation services often use, require higher clearances in parking garages than automobiles.

A4.8 Ramps.

A4.8.1 General. Ramps are essential for wheelchair users if elevators or lifts are not available to connect different levels. However, some people who use walking aids have difficulty with ramps and prefer stairs.

A4.8.2 Slope and Rise. *Ramp slopes between 1:16 and 1:20 are preferred.* The ability to manage an incline is related to both its slope and its length. Wheelchair users with disabilities affecting *their* arms or with low stamina have serious difficulty using inclines. Most ambulatory people and most people who use wheelchairs can manage a slope of 1:16. Many people cannot manage a slope of 1:12 for 30 ft (9 m).

A4.8.4 Landings. *Level landings are essential toward maintaining an aggregate slope that complies with these guidelines. A ramp landing that is not level causes individuals using wheelchairs to tip backward or bottom out when the ramp is approached.*

A4.8.5 Handrails. The requirements for stair and ramp handrails in this *guideline* are for adults. When children are principal users in a building or facility, a second set of handrails at an appropriate height can assist them and aid in preventing accidents.

A4.9 Stairs.

A4.9.1 Minimum Number. *Only interior and exterior stairs connecting levels that are not connected by an elevator, ramp, or other accessible means of vertical access have to comply with 4.9.*

A4.10 Elevators.

A4.10.6 Door Protective and Reopening Device. The required door reopening device would hold the door open for 20 seconds if the doorway remains obstructed. After 20 seconds, the door may begin to close. However, if designed in accordance with *ASME A17.1-1990*, the door closing movement could still be stopped if a person or object exerts sufficient force at any point on the door edge.

A4.10.7 Door and Signal Timing for Hall Calls. This paragraph allows variation in the location of call buttons, advance time for warning signals, and the door-holding period used to meet the time requirement.

A4.10.12 Car Controls. Industry-wide standardization of elevator control panel design would make all elevators significantly more convenient for use by people with severe visual impairments. In many cases, it will be possible to locate the highest control on elevator panels within 48 in (1220 mm) from the floor.

A4.11 Platform Lifts *(Wheelchair Lifts)*

A4.10.13 Car Position Indicators. A special button may be provided that would activate the audible signal within the given elevator only for the desired trip, rather than maintaining the audible signal in constant operation.

A4.10.14 Emergency Communications. A device that requires no handset is easier to use by people who have difficulty reaching. *Also, small handles on handset compartment doors are not usable by people who have difficulty grasping.*

Ideally, emergency two-way communication systems should provide both voice and visual display intercommunication so that persons with hearing impairments and persons with vision impairments can receive information regarding the status of a rescue. A voice intercommunication system cannot be the only means of communication because it is not accessible to people with speech and hearing impairments. While a voice intercommunication system is not required, at a minimum, the system should provide both an audio and visual indication that a rescue is on the way.

A4.11 Platform Lifts *(Wheelchair Lifts).*

A4.11.2 Other Requirements. *Inclined stairway chairlifts, and inclined and vertical platform lifts (wheelchair lifts) are available* for short-distance, vertical transportation of people with disabilities. Care should be taken in selecting lifts *as some lifts are not equally suitable for use by both wheelchair users and semi-ambulatory individuals.*

A4.12 Windows.

A4.12.1 General. *Windows intended to be operated by occupants in accessible spaces should comply with 4.12.*

A4.12.2 Window Hardware. *Windows requiring pushing, pulling, or lifting to open (for example, double-hung, sliding, or casement and awning units without cranks) should require no more than 5 lbf (22.2 N) to open or close. Locks, cranks, and other window hardware should comply with 4.27.*

A4.13 Doors.

A4.13.8 Thresholds at Doorways. Thresholds and surface height changes in doorways are particularly inconvenient for wheelchair users who also have low stamina or restrictions in arm movement because complex maneuvering is required to get over the level change while operating the door.

A4.13.9 Door Hardware. Some disabled persons must push against a door with their chair or walker to open it. Applied kickplates on doors with closers can reduce required maintenance by withstanding abuse from wheelchairs and canes. To be effective, they should cover the door width, less approximately 2 in (51 mm), up to a height of 16 in (405 mm) from its bottom edge and be centered across the *width of the door.*

A4.13.10 Door Closers. Closers with delayed action features give a person more time to maneuver through doorways. They are particularly useful on frequently used interior doors such as entrances to toilet rooms.

A4.13.11 Door Opening Force. Although most people with disabilities can exert at least 5 lbf (22.2N), both pushing and pulling from a stationary position, a few people with severe disabilities cannot exert 3 lbf (13.13N). Although some people cannot manage the allowable forces in this guideline and many others have difficulty, door closers must have certain minimum closing forces to close doors satisfactorily. Forces for pushing or pulling doors open are measured with a push-pull scale under the following conditions:

(1) Hinged doors: Force applied perpendicular to the door at the door opener or 30 in (760 mm) from the hinged side, whichever is farther from the hinge.

(2) Sliding or folding doors: Force applied parallel to the door at the door pull or latch.

(3) Application of force: Apply force gradually so that the applied force does not exceed the resistance of the door. In high-rise buildings, air-pressure differentials may require a modification of this specification in order to meet the functional intent.

A4.15 Drinking Fountains and Water Coolers

A4.13.12 Automatic Doors and Power-Assisted Doors. Sliding automatic doors do not need guard rails and are more convenient for wheelchair users and visually impaired people to use. If slowly opening automatic doors can be reactivated before their closing cycle is completed, they will be more convenient in busy doorways.

A4.15 Drinking Fountains and Water Coolers.

A4.15.2 Spout Height. *Two drinking fountains, mounted side by side or on a single post, are usable by people with disabilities and people who find it difficult to bend over.*

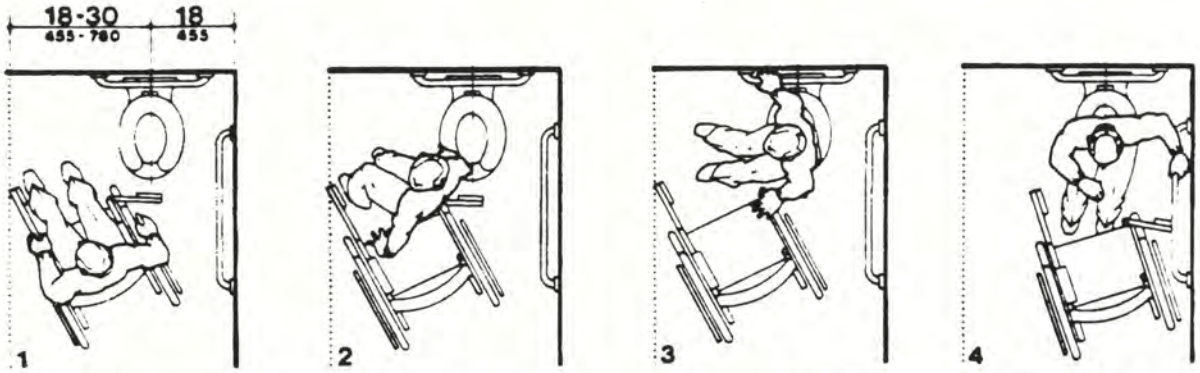

Takes transfer position, swings footrest out of the way, sets brakes.

Removes armrest, transfers.

Moves wheelchair out of the way, changes position (some people fold chair or pivot it 90° to the toilet).

Positions on toilet, releases brake.

(a)
Diagonal Approach

Takes transfer position, removes armrest, sets brakes.

Transfers.

Positions on toilet.

(b)
Side Approach

Fig. A6
Wheelchair Transfers

A4.16 Water Closets

A4.16 Water Closets.

A4.16.3 Height. Height preferences for toilet seats vary considerably among disabled people. Higher seat heights may be an advantage to some ambulatory disabled people, but are often a disadvantage for wheelchair users and others. Toilet seats 18 in (455 mm) high seem to be a reasonable compromise. Thick seats and filler rings are available to adapt standard fixtures to these requirements.

A4.16.4 Grab Bars. Fig. A6(a) and (b) show the diagonal and side approaches most commonly used to transfer from a wheelchair to a water closet. Some wheelchair users can transfer from the front of the toilet while others use a 90-degree approach. Most people who use the two additional approaches can also use either the diagonal approach or the side approach.

A4.16.5 Flush Controls. Flush valves and related plumbing can be located behind walls or to the side of the toilet, or a toilet seat lid can be provided if plumbing fittings are directly behind the toilet seat. Such designs reduce the chance of injury and imbalance caused by leaning back against the fittings. Flush controls for tank-type toilets have a standardized mounting location on the left side of the tank (facing the tank). Tanks can be obtained by special order with controls mounted on the right side. If administrative authorities require flush controls for flush valves to be located in a position that conflicts with the location of the rear grab bar, then that bar may be split or shifted toward the wide side of the toilet area.

A4.17 Toilet Stalls.

A4.17.3 Size and Arrangement. *This section requires use of the 60 in (1525 mm) standard stall (Figure 30(a)) and permits the 36 in (915 mm) or 48 in (1220 mm) wide alternate stall (Figure 30(b)) only in alterations where provision of the standard stall is technically infeasible or where local plumbing codes prohibit reduction in the number of fixtures. A standard stall provides a clear space on one side of the water closet to enable persons who use wheelchairs to perform a side or diagonal transfer from the wheelchair to the water closet. However, some persons with disabilities who use mobility aids such as walkers, canes or crutches are better able to use the two parallel grab bars in the 36 in (915 mm) wide alternate stall to achieve a standing position.*

In large toilet rooms, where six or more toilet stalls are provided, it is therefore required that a 36 in (915 mm) wide stall with parallel grab bars be provided in addition to the standard stall required in new construction. The 36 in (915 mm) width is necessary to achieve proper use of the grab bars; wider stalls would position the grab bars too far apart to be easily used and narrower stalls would position the grab bars too close to the water closet. Since the stall is primarily intended for use by persons using canes, crutches and walkers, rather than wheelchairs, the length of the stall could be conventional. The door, however, must swing outward to ensure a usable space for people who use crutches or walkers.

A4.17.5 Doors. To make it easier for wheelchair users to close toilet stall doors, doors can be provided with closers, spring hinges, or a pull bar mounted on the inside surface of the door near the hinge side.

A4.19 Lavatories and Mirrors.

A4.19.6 Mirrors. If mirrors are to be used by both ambulatory people and wheelchair users, then they must be at least 74 in (1880 mm) high at their topmost edge. A single full length mirror can accommodate all people, including children.

A4.21 Shower Stalls.

A4.21.1 General. Shower stalls that are 36 in by 36 in (915 mm by 915 mm) wide provide additional safety to people who have difficulty maintaining balance because all grab bars and walls are within easy reach. Seated people use the walls of 36 in by 36 in (915 mm by 915 mm) showers for back support. Shower stalls that are 60 in (1525 mm) wide and have no curb may increase usability of a bathroom by wheelchair users because the shower area provides additional maneuvering space.

A4.22 Toilet Rooms.

A4.22.3 Clear Floor Space. *In many small facilities, single-user restrooms may be the only*

A4.22 Toilet Rooms

facilities provided for all building users. In addition, the guidelines allow the use of "unisex" or "family" accessible toilet rooms in alterations when technical infeasibility can be demonstrated. Experience has shown that the provision of accessible "unisex" or single-user restrooms is a reasonable way to provide access for wheelchair users and any attendants, especially when attendants are of the opposite sex. Since these facilities have proven so useful, it is often considered advantageous to install a "unisex" toilet room in new facilities in addition to making the multi-stall restrooms accessible, especially in shopping malls, large auditoriums, and convention centers.

Figure 28 (section 4.16) provides minimum clear floor space dimensions for toilets in accessible "unisex" toilet rooms. The dotted lines designate the minimum clear floor space, depending on the direction of approach, required for wheelchair users to transfer onto the water closet. The dimensions of 48 in (1220 mm) and 60 in (1525 mm), respectively, correspond to the space required for the two common transfer approaches utilized by wheelchair users (see Fig. A6). It is important to keep in mind that the placement of the lavatory to the immediate side of the water closet will preclude the side approach transfer illustrated in Figure A6(b).

To accommodate the side transfer, the space adjacent to the water closet must remain clear of obstruction for 42 in (1065 mm) from the centerline of the toilet (Figure 28) and the lavatory must not be located within this clear space. A turning circle or T-turn, the clear floor space at the lavatory, and maneuvering space at the door must be considered when determining the possible wall locations. A privacy latch or other accessible means of ensuring privacy during use should be provided at the door.

RECOMMENDATIONS:

1. In new construction, accessible single-user restrooms may be desirable in some situations because they can accommodate a wide variety of building users. However, they cannot be used in lieu of making the multi-stall toilet rooms accessible as required.

2. Where strict compliance to the guidelines for accessible toilet facilities is technically infeasible in the alteration of existing facilities, accessible "unisex" toilets are a reasonable alternative.

3. In designing accessible single-user restrooms, the provisions of adequate space to allow a side transfer will provide accommodation to the largest number of wheelchair users.

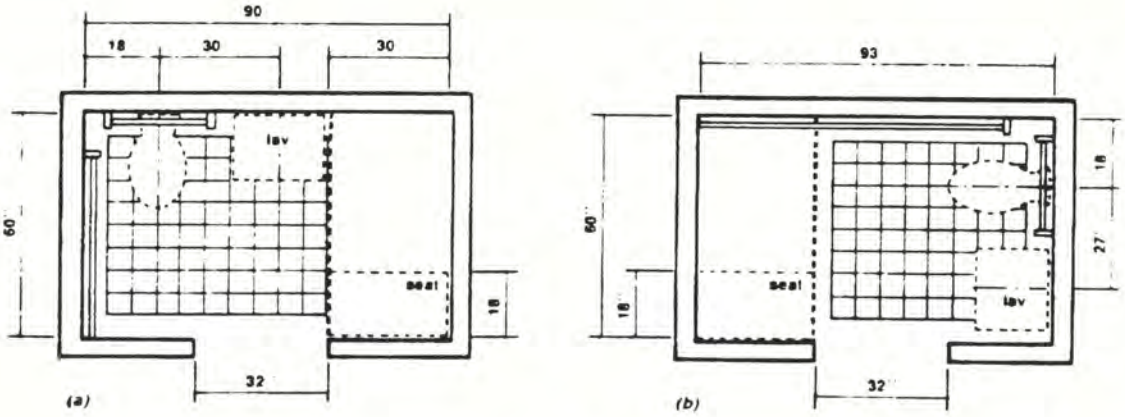

Fig. A7

A4.23 Bathrooms, Bathing Facilities, and Shower Rooms

A4.23 Bathrooms, Bathing Facilities, and Shower Rooms.

A4.23.3 Clear Floor Space. *Figure A7 shows two possible configurations of a toilet room with a roll-in shower. The specific shower shown is designed to fit exactly within the dimensions of a standard bathtub. Since the shower does not have a lip, the floor space can be used for required maneuvering space. This would permit a toilet room to be smaller than would be permitted with a bathtub and still provide enough floor space to be considered accessible. This design can provide accessibility in facilities where space is at a premium (i.e., hotels and medical care facilities). The alternate roll-in shower (Fig. 57b) also provides sufficient room for the "T-turn" and does not require plumbing to be on more than one wall.*

A4.23.9 Medicine Cabinets. Other alternatives for storing medical and personal care items are very useful to disabled people. Shelves, drawers, and floor-mounted cabinets can be provided within the reach ranges of disabled people.

A4.26 Handrails, Grab Bars, and Tub and Shower Seats.

A4.26.1 General. Many disabled people rely heavily upon grab bars and handrails to maintain balance and prevent serious falls. Many people brace their forearms between supports and walls to give them more leverage and stability in maintaining balance or for lifting. The grab bar clearance of 1-1/2 in (38 mm) required in this guideline is a safety clearance to prevent injuries resulting from arms slipping through the openings. It also provides adequate gripping room.

A4.26.2 Size and Spacing of Grab Bars and Handrails. This specification allows for alternate shapes of handrails as long as they allow an opposing grip similar to that provided by a circular section of 1-1/4 in to 1-1/2 in (32 mm to 38 mm).

A4.27 Controls and Operating Mechanisms.

A4.27.3 Height. *Fig. A8 further illustrates*

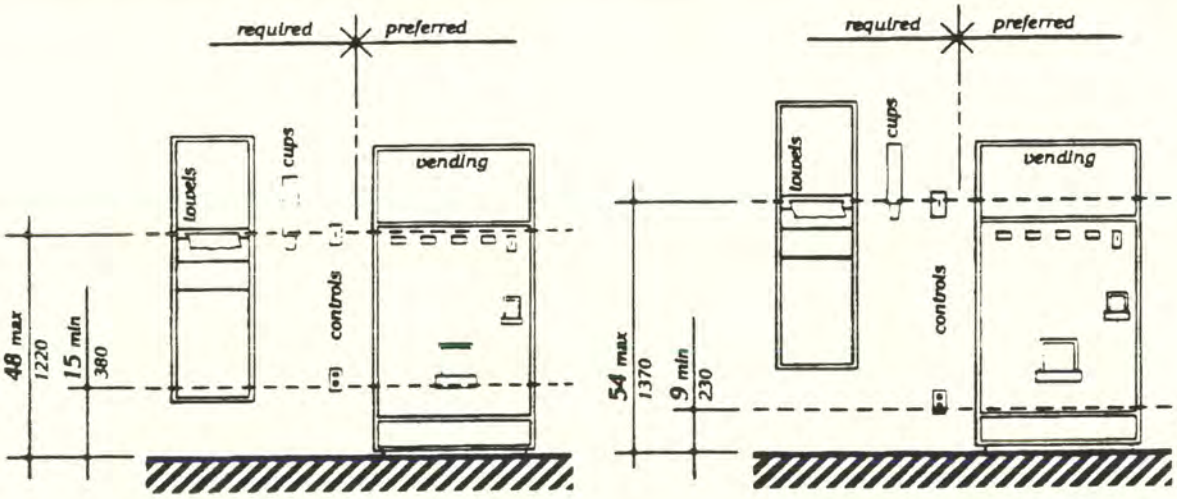

Fig. A8
Control Reach Limitations

mandatory and advisory control mounting height provisions for typical equipment.

Electrical receptacles installed to serve individual appliances and not intended for regular or frequent use by building occupants are not required to be mounted within the specified reach ranges. Examples would be receptacles installed specifically for wall-mounted clocks, refrigerators, and microwave ovens.

A4.28 Alarms.

A4.28.2 Audible Alarms. Audible emergency signals must have an intensity and frequency that can attract the attention of individuals who have partial hearing loss. People over 60 years of age generally have difficulty perceiving frequencies higher than 10,000 Hz. *An alarm signal which has a periodic element to its signal, such as single stroke bells (clang-pause-clang-pause), hi-low (up-down-up-down) and fast whoop (on-off-on-off) are best. Avoid continuous or reverberating tones. Select a signal which has a sound characterized by three or four clear tones without a great deal of "noise" in between.*

A4.28.3 Visual Alarms. The specifications in this section do not preclude the use of zoned or coded alarm systems.

A4.28.4 Auxiliary Alarms. Locating visual emergency alarms in rooms where persons who are deaf may work or reside alone can ensure that they will always be warned when an emergency alarm is activated. To be effective, such devices must be located and oriented so that they will spread signals and reflections throughout a space or raise the overall light level sharply. *However, visual alarms alone are not necessarily the best means to alert sleepers. A study conducted by Underwriters Laboratory (UL) concluded that a flashing light more than seven times brighter was required (110 candela v. 15 candela, at the same distance) to awaken sleepers as was needed to alert awake subjects in a normal daytime illuminated room.*

For hotel and other rooms where people are likely to be asleep, a signal-activated vibrator placed between mattress and box spring or under a pillow was found by UL to be much more effective in alerting sleepers. Many readily available devices are sound-activated so that they could respond to an alarm clock, clock radio, wake-up telephone call or room smoke detector. Activation by a building alarm system can either be accomplished by a separate circuit activating an auditory alarm which would, in turn, trigger the vibrator or by a signal transmitted through the ordinary 110-volt outlet. Transmission of signals through the power line is relatively simple and is the basis of common, inexpensive remote light control systems sold in many department and electronic stores for home use. So-called "wireless" intercoms operate on the same principal.

A4.29 *Detectable* Warnings.

A4.29.2 *Detectable* Warnings on Walking Surfaces. *The material used to provide contrast should contrast by at least 70%. Contrast in percent is determined by:*

$$Contrast = [(B_1 - B_2)/B_1] \times 100$$

where B_1 = light reflectance value (LRV) of the lighter area
and B_2 = light reflectance value (LRV) of the darker area.

Note that in any application both white and black are never absolute; thus, B_1 never equals 100 and B_2 is always greater than 0.

A4.30 Signage.

A4.30.1 General. In building complexes where finding locations independently on a routine basis may be a necessity (for example, college campuses), tactile maps or prerecorded instructions can be very helpful to visually impaired people. Several maps and auditory instructions have been developed and tested for specific applications. The type of map or instructions used must be based on the information to be communicated, which depends highly on the type of buildings or users.

Landmarks that can easily be distinguished by visually impaired individuals are useful as orientation cues. Such cues include changes in illumination level, bright colors, unique patterns, wall murals, location of special equipment or other architectural features.

Many people with disabilities have limitations in movement of their heads and reduced peripheral vision. Thus, signage positioned

A4.30 Signage

perpendicular to the path of travel is easiest for them to notice. People can generally distinguish signage within an angle of 30 degrees to either side of the centerlines of their faces without moving their heads.

A4.30.2 Character Proportion. The legibility of printed characters is a function of the viewing distance, character height, the ratio of the stroke width to the height of the character, the contrast of color between character and background, and print font. The size of characters must be based upon the intended viewing distance. A severely nearsighted person may have to be much closer to recognize a character of a given size than a person with normal visual acuity.

A4.30.4 Raised *and Brailled* Characters *and Pictorial Symbol Signs (Pictograms).* *The standard dimensions for literary Braille are as follows:*

Dot diameter	*.059 in.*
Inter-dot spacing	*.090 in.*
Horizontal separation between cells	*.241 in.*
Vertical separation between cells	*.395 in.*

Raised borders around *signs containing* raised characters may make them confusing to read unless the border is set far away from the characters. *Accessible signage with descriptive materials about public buildings, monuments, and objects of cultural interest may not provide sufficiently detailed and meaningful information. Interpretive guides, audio tape devices, or other methods may be more effective in presenting such information.*

A4.30.5 Finish and Contrast. *An eggshell finish (11 to 19 degree gloss on 60 degree glossimeter) is recommended. Research indicates that signs are more legible for persons with low vision when characters contrast with their background by at least 70 percent. Contrast in percent shall be determined by:*

$$Contrast = [(B_1 - B_2)/B_1] \times 100$$

where B_1 = light reflectance value (LRV) of the lighter area
and B_2 = light reflectance value (LRV) of the darker area.

Note that in any application both white and black are never absolute; thus, B_1 never equals 100 and B_2 is always greater than 0.

The greatest readability is usually achieved through the use of light-colored characters or symbols on a dark background.

A4.30.7 Symbols of Accessibility for Different Types of Listening Systems. *Paragraph 4 of this section requires signage indicating the availability of an assistive listening system. An appropriate message should be displayed with the international symbol of access for hearing loss since this symbol conveys general accessibility for people with hearing loss. Some suggestions are:*

INFRARED
ASSISTIVE LISTENING SYSTEM
AVAILABLE
——PLEASE ASK——

AUDIO LOOP IN USE
TURN T-SWITCH FOR
BETTER HEARING
——OR ASK FOR HELP——

FM
ASSISTIVE LISTENING
SYSTEM AVAILABLE
——PLEASE ASK——

The symbol may be used to notify persons of the availability of other auxiliary aids and services such as: real time captioning, captioned note taking, sign language interpreters, and oral interpreters.

A4.30.8 Illumination Levels. *Illumination levels on the sign surface shall be in the 100 to 300 lux range (10 to 30 footcandles) and shall be uniform over the sign surface. Signs shall be located such that the illumination level on the surface of the sign is not significantly exceeded by the ambient light or visible bright lighting source behind or in front of the sign.*

A4.31 Telephones.

A4.31.3 Mounting Height. In localities where the dial-tone first system is in operation, calls can be placed at a coin telephone through the operator without inserting coins. The operator button is located at a height of 46 in (1170 mm) if the coin slot of the telephone is at 54 in (1370 mm). A generally available public telephone with a coin slot mounted lower on the equipment would allow universal installation of telephones at a height of 48 in (1220 mm) or less to all operable parts.

A4.31.9 Text Telephones. *A public text telephone may be an integrated text telephone pay phone unit or a conventional portable text telephone that is permanently affixed within, or adjacent to, the telephone enclosure. In order to be usable with a pay phone, a text telephone which is not a single integrated text telephone pay phone unit will require a shelf large enough (10 in (255mm) wide by 10 in (255 mm) deep with a 6 in (150 mm) vertical clearance minimum) to accommodate the device, an electrical outlet, and a power cord. Movable or portable text telephones may be used to provide equivalent facilitation. A text telephone should be readily available so that a person using it may access the text telephone easily and conveniently. As currently designed pocket-type text telephones for personal use do not accommodate a wide range of users. Such devices would not be considered substantially equivalent to conventional text telephones. However, in the future as technology develops this could change.*

A4.32 *Fixed or Built-in* Seating and Tables.

A4.32.4 Height of *Tables or Counters*. Different types of work require different *table or counter* heights for comfort and optimal performance. Light detailed work such as writing requires a *table or counter* close to elbow height for a standing person. Heavy manual work such as rolling dough requires a *counter or table* height about 10 in (255 mm) below elbow height for a standing person. This principle of *high/low table or counter heights* also applies for seated persons; however, the limiting condition for seated manual work is clearance under the *table or counter*.

Table A1 shows convenient *counter heights* for seated persons. The great variety of heights for comfort and optimal performance indicates a need for alternatives or a compromise in height if people who stand and people who sit will be using the same counter area.

Table A1
Convenient Heights of Tables and Counters for Seated People[1]

Conditions of Use	Short Women in mm		Tall Men in mm	
Seated in a wheelchair:				
Manual work–				
Desk or removeable armrests	26	660	30	760
Fixed, full-size armrests[2]	32[3]	815	32[3]	815
Light detailed work:				
Desk or removable armrests	29	735	34	865
Fixed, full-size armrests[2]	32[3]	815	34	865
Seated in a 16-in. (405-mm) High chair:				
Manual work	26	660	27	685
Light detailed work	28	710	31	785

[1] All dimensions are based on a work-surface thickness of 1 1/2 in (38 mm) and a clearance of 1 1/2 in (38 mm) between legs and the underside of a work surface.

[2] This type of wheelchair arm does not interfere with the positioning of a wheelchair under a work surface.

[3] This dimension is limited by the height of the armrests: a lower height would be preferable. Some people in this group prefer lower work surfaces, which require positioning the wheelchair back from the edge of the counter.

A4.33 Assembly Areas.

A4.33.2 Size of Wheelchair Locations. Spaces large enough for two wheelchairs allow people who are coming to a performance together to sit together.

A4.33.3 Placement of Wheelchair Locations. The location of wheelchair areas can be planned so that a variety of positions

Table A2. Summary of Assistive Listening Devices

within the seating area are provided. This will allow choice in viewing and price categories.

Building/life safety codes set minimum distances between rows of fixed seats with consideration of the number of seats in a row, the exit aisle width and arrangement, and the location of exit doors. "Continental" seating, with a greater number of seats per row and a commensurate increase in row spacing and exit doors, facilitates emergency egress for all people and increases ease of access to mid-row seats especially for people who walk with difficulty. Consideration of this positive attribute of "continental" seating should be included along with all other factors in the design of fixed seating areas.

Table A2. Summary of Assistive Listening Devices

System	Advantages	Disadvantages	Typical Applications
Induction Loop Transmitter: Transducer wired to induction loop around listening area. Receiver: Self-contained induction receiver or personal hearing aid with telecoil.	Cost-Effective Low Maintenance Easy to use Unobtrusive May be possible to integrate into existing public address system. Some hearing aids can function as receivers.	Signal spills over to adjacent rooms. Susceptible to electrical interference. Limited portability Inconsistent signal strength. Head position affects signal strength. Lack of standards for induction coil performance.	Meeting areas Theaters Churches and Temples Conference rooms Classrooms TV viewing
FM Transmitter: Flashlight-sized worn by speaker. Receiver: With personal hearing aid via DAI or induction neck-loop and telecoil; or self-contained with earphone(s).	Highly portable Different channels allow use by different groups within the same room. High user mobility Variable for large range of hearing losses.	High cost of receivers Equipment fragile Equipment obtrusive High maintenance Expensive to maintain Custom fitting to individual user may be required.	Classrooms Tour groups Meeting areas Outdoor events One-on-one
Infrared Transmitter: Emitter in line-of-sight with receiver. Receiver: Self-contained. Or with personal hearing aid via DAI or induction neckloop and telecoil.	Easy to use Insures privacy or confidentiality Moderate cost Can often be integrated into existing public address system.	Line-of-sight required between emitter and receiver. Ineffective outdoors Limited portability Requires installation	Theaters Churches and Temples Auditoriums Meetings requiring confidentiality TV viewing

Source: Rehab Brief, National Institute on Disability and Rehabilitation Research, Washington, DC, Vol. XII, No. 10, (1990).

PROPERTY SCHEDULE
CITY OF COSTA MESA
FEBRUARY 21, 1992

Signature
Date

REAL PROPERTY TREND FACTOR 1.30%
PERSONAL PROPERTY TREND FACTOR 0.60%

LOC NO	TRE ID	ADDRESS	OCCUPANCY	CONSTRUCTION	EQ REAL	AUTO SPKLR	YEAR BUILT	YEAR APPRS	1991 REAL PROPERTY	1991 PERSONAL PROPERTY	1991 BI / RENTS	1991 TOTALS	1992 REAL PROPERTY	1992 PERSONAL PROPERTY	1992 BI / RENTS	1992 TOTALS
1		77 FAIR AVENUE COSTA MESA	0 Square Feet 011 CITY HALL	Class: B ALL REINFORCED CONCRETE EQ PP YES EQ RT YES	YES	NO			$6,211,134	$1,795,043	$0	$8,006,178	$6,291,879	$1,805,813	$0	$8,097,693
2		77 FAIR AVENUE COSTA MESA	0 Square Feet 019 YARD STORAGE	Class: U UNKNOWN EQ PP YES EQ RT YES	YES	NO			$174,844	$0	$0	$174,844	$177,117	$0	$0	$177,117
3		99 FAIR DRIVE COSTA MESA	0 Square Feet 021 POLICE FACILITY	Class: B ALL REINFORCED CONCRETE EQ PP YES EQ RT YES	YES	NO			$3,973,078	$1,495,639	$0	$5,468,718	$4,024,728	$1,504,613	$0	$5,529,342
4		99 FAIR DRIVE COSTA MESA	0 Square Feet 022 STORAGE OFFICE	Class: C MASONRY CONST/WOOD ROOF EQ PP YES EQ RT YES	YES	NO			$5,363	$29,519	$0	$34,882	$5,433	$29,696	$0	$35,129
5		1701 GOLF COURSE DRIVE COSTA MESA	0 Square Feet 029 GOLF CLUB HOUSE	Class: D ALL COMBUSTIBLE EQ PP YES EQ RT YES	YES	NO			$1,357,988	$144,545	$150,000	$1,652,533	$1,375,642	$145,412	$150,000	$1,671,054
6		2310 PLACENTIA COSTA MESA	0 Square Feet 042 GOLF COURSE YARD STORAGE	Class: U UNKNOWN EQ PP NO EQ RT NO	NO	NO			$140,197	$96,108	$0	$236,305	$142,019	$96,685	$0	$238,704
7		1800 WHITTIER COSTA MESA	0 Square Feet WHITTIER SCHOOL	Class: U UNKNOWN EQ PP NO EQ RT NO	NO	NO			$0	$1,241	$0	$1,241	$0	$1,248	$0	$1,248
8		WILSON/PLACENTIA COSTA MESA	0 Square Feet WILSON SCHOOL	Class: U UNKNOWN EQ PP NO EQ RT NO	NO	NO			$0	$1,241	$0	$1,241	$0	$1,248	$0	$1,248
9		WILSON/PLACENTIA COSTA MESA	0 Square Feet 043 SNACK BAR & RESTROOMS	Class: D ALL COMBUSTIBLE EQ PP NO EQ RT NO	NO	NO			$79,913	$4,385	$0	$84,298	$80,952	$4,411	$0	$85,363
10		WILSON/PLACENTIA COSTA MESA	0 Square Feet 049 YARD VALUES	Class: D ALL COMBUSTIBLE EQ PP NO EQ RT NO	NO	NO			$61,142	$0	$0	$61,142	$61,936	$0	$0	$61,936
11		MESA VERDE COSTA MESA	0 Square Feet 051 LIBRARY	Class: D ALL COMBUSTIBLE EQ PP NO EQ RT NO	NO	NO			$514,663	$5,454	$0	$520,117	$521,353	$5,487	$0	$526,840
12		2800 FOTHL PALM COSTA MESA	0 Square Feet 061 FIRE STATION #1	Class: D ALL COMBUSTIBLE EQ PP NO EQ RT NO	NO	NO			$778,752	$310,452	$0	$1,089,204	$788,875	$312,315	$0	$1,101,190

PROPERTY SCHEDULE
CITY OF COSTA MESA
FEBRUARY 21, 1992

REAL PROPERTY TREND FACTOR: 1.30%
PERSONAL PROPERTY TREND FACTOR: 0.60%

LOC #	2ND ID	ADDRESS	OCCUPANCY	CONSTRUCTION	EQ REAL	AUTO SPKLR	YEAR BUILT	YEAR APPRS	1991 REAL PROPERTY	1991 PERSONAL PROPERTY	1991 BI / RENTS	1991 TOTALS	1992 REAL PROPERTY	1992 PERSONAL PROPERTY	1992 BI / RENTS	1992 TOTALS
12		1865 PARK AVENUE COSTA MESA	0 Square Feet 081 FIRE STATION #3	Class: C MASONRY CONST/WOOD ROOF EQ PP NO EQ RT NO	NO	No			$994,356	$37,447	$0	$1,031,803	$1,007,283	$37,672	$0	$1,044,955
14		800 BAKER COSTA MESA	0 Square Feet 071 FIRE STATION #2	Class: D ALL COMBUSTIBLE EQ PP YES EQ RT YES	YES	No			$472,260	$142,755	$0	$615,015	$478,400	$143,612	$0	$622,011
15		800 BAKER COSTA MESA	0 Square Feet 079 YARD VALUES	Class: U UNKNOWN EQ PP YES EQ RT YES	YES	No			$24,135	$0	$0	$24,135	$24,449	$0	$0	$24,449
16		2300 PLACENTIA COSTA MESA	0 Square Feet 091 FIRE STATION #4	Class: D ALL COMBUSTIBLE EQ PP NO EQ RT NO	NO	No			$497,443	$122,101	$0	$619,544	$503,909	$122,834	$0	$626,743
17		2300 PLACENTIA COSTA MESA	0 Square Feet 092 DRILL TOWER	Class: B ALL REINFORCED CONCRETE EQ PP NO EQ RT NO	NO	No			$93,321	$0	$0	$93,321	$94,535	$0	$0	$94,535
18		2300 PLACENTIA COSTA MESA	0 Square Feet 099 YARD VALUESDDDDDDDDDDDALL REINFORCED CONCRETE EQ PP NO EQ RT NO	Class: B	NO	No			$51,488	$0	$0	$51,488	$52,157	$0	$0	$52,157
19		2300 PLACENTIA COSTA MESA	0 Square Feet 100 CORPORATION YARD	Class: C MASONRY CONST/WOOD ROOF EQ PP NO EQ RT NO	NO	No			$956,254	$0	$0	$956,254	$968,685	$0	$0	$968,685
20		2300 PLACENTIA COSTA MESA	0 Square Feet 101 OFFICE & SHOP	Class: U UNKNOWN EQ PP NO EQ RT NO	NO	No			$0	$343,299	$0	$343,299	$0	$345,359	$0	$345,359
21		2300 PLACENTIA COSTA MESA	0 Square Feet 102 STORAGE	Class: U UNKNOWN EQ PP NO EQ RT NO	NO	No			$12,014	$0	$0	$12,014	$12,170	$0	$0	$12,170
22		2300 PLACENTIA COSTA MESA	0 Square Feet 103 STORAGE	Class: U UNKNOWN EQ PP NO EQ RT NO	NO	No			$3,224	$35,700	$0	$38,924	$3,266	$35,914	$0	$39,181
23		2300 PLACENTIA COSTA MESA	0 Square Feet YARD VALUES	Class: B ALL REINFORCED CONCRETE EQ PP NO EQ RT NO	NO	No			$15,554	$325,131	$0	$340,684	$15,756	$327,082	$0	$342,837
24		1795 MESA VERDE DRIVE COSTA MESA	0 Square Feet 111 ACTIVITY BUILDING	Class: C MASONRY CONST/WOOD ROOF	NO	No			$28,426	$0	$0	$28,426	$28,795	$0	$0	$28,795

PROPERTY SCHEDULE
CITY OF COSTA MESA
FEBRUARY 21, 1992

REAL PROPERTY TREND FACTOR: 1.30%
PERSONAL PROPERTY TREND FACTOR: 0.60%

LOC NO #	2ND ID	ADDRESS	OCCUPANCY	CONSTRUCTION	EQ REAL	AUTO SPKLR	YEAR BUILT	YEAR APPRS	1991 REAL PROPERTY	1991 PERSONAL PROPERTY	1991 BI / RENTS	1991 TOTALS	1992 REAL PROPERTY	1992 PERSONAL PROPERTY	1992 BI / RENTS	1992 TOTALS
				EQ PP NO EQ RT NO												
25		1795 MESA VERDE DRIVE COSTA MESA	0 Square Feet 111 YARD VALUES RESTROOMS	Class: U UNKNOWN EQ PP NO EQ RT NO	NO	NO			$0	$6,524	$0	$6,524	$0	$6,564	$0	$6,564
26		1640 CORSICA PLACE COSTA MESA	0 Square Feet 121 RESTROOMS 122 SHELTER	Class: C MASONRY CONST/WOOD ROOF EQ PP NO EQ RT NO	NO	NO			$82,059	$0	$0	$82,059	$83,125	$0	$0	$83,125
27		1640 CORSICA PLACE COSTA MESA	0 Square Feet 129 YARD VALUES	Class: B ALL REINFORCED CONCRETE EQ PP NO EQ RT NO	NO	NO			$10,941	$6,524	$0	$17,465	$11,083	$6,564	$0	$17,647
28		1900 ADAMS STREET COSTA MESA	0 Square Feet 131 HISTORICAL DATA (ADOBE)	Class: C MASONRY CONST/WOOD ROOF EQ PP NO EQ RT NO	NO	NO			$87,529	$0	$0	$87,529	$88,667	$0	$0	$88,667
29		1900 ADAMS STREET COSTA MESA	0 Square Feet 132 RESTROOMS	Class: C MASONRY CONST/WOOD ROOF EQ PP NO EQ RT NO	NO	NO			$61,142	$0	$0	$61,142	$61,936	$0	$0	$61,936
30		1900 ADAMS STREET COSTA MESA	0 Square Feet 139 YARD VALUES	Class: B ALL REINFORCED CONCRETE EQ PP NO EQ RT NO	NO	NO			$1,073	$0	$0	$1,073	$1,087	$0	$0	$1,087
31		425 E. 18TH STREET COSTA MESA	0 Square Feet 140 HARBOR PARK	Class: D ALL COMBUSTIBLE EQ PP NO EQ RT NO	NO	NO			$3,218	$0	$0	$3,218	$3,260	$0	$0	$3,260
32		425 E. 18TH STREET COSTA MESA	0 Square Feet 149 PICNIC & BBQ CENTER	Class: U UNKNOWN EQ PP NO EQ RT NO	NO	NO			$3,218	$0	$0	$3,218	$3,260	$0	$0	$3,260
33		TUSTIN AVENUE PARK COSTA MESA	0 Square Feet 150 TUSTIN AVE PARK	Class: C MASONRY CONST/WOOD ROOF EQ PP NO EQ RT NO	NO	NO			$23,062	$0	$0	$23,062	$23,362	$0	$0	$23,362
34		TUSTIN AVENUE PARK COSTA MESA	0 Square Feet 159 PICNIC & BBQ CENTER	Class: U UNKNOWN EQ PP NO EQ RT NO	NO	NO			$4,398	$0	$0	$4,398	$4,455	$0	$0	$4,455
35		1200 VICTORIA COSTA MESA	0 Square Feet 160 VISTA PARK STORAGE SHED	Class: C MASONRY CONST/WOOD ROOF EQ PP NO EQ RT NO	NO	NO			$1,073	$0	$0	$1,073	$1,087	$0	$0	$1,087
36		257 E. 16TH STREET	0 Square Feet	Class: U	NO	NO			$0	$3,209	$0	$3,209	$0	$3,228	$0	$3,228

PROPERTY SCHEDULE
CITY OF COSTA MESA
FEBRUARY 21, 1992

REAL PROPERTY TREND FACTOR: 1.30%
PERSONAL PROPERTY TREND FACTOR: 0.60%

LOC NO #	ID	ADDRESS	OCCUPANCY	CONSTRUCTION	EQ REAL	AUTO SPKLR	YEAR BUILT	YEAR APPRS	1991 REAL PROPERTY	1991 PERSONAL PROPERTY	1991 BI / RENTS	1991 TOTALS	1992 REAL PROPERTY	1992 PERSONAL PROPERTY	1992 BI / RENTS	1992 TOTALS
		COSTA MESA	169 MELLER PARK	UNKNOWN EQ PP NO EQ RT NO												
37		257 E. 16TH STREET COSTA MESA	0 Square Feet 171 RESTROOMS	Class: C MASONRY CONST/WOOD ROOF EQ PP NO EQ RT NO	NO	No			$48,270	$0	$0	$48,270	$48,897	$0	$0	$48,897
38		257 E. 16TH STREET COSTA MESA	0 Square Feet 179 YARD VALUES	Class: D ALL COMBUSTIBLE EQ PP NO EQ RT NO	NO	No			$26,280	$0	$0	$26,280	$26,622	$0	$0	$26,622
39		220 E. 23RD STREET COSTA MESA	0 Square Feet 180 LINDBERG SCHOOL	Class: B ALL REINFORCED CONCRETE EQ PP NO EQ RT NO	NO	No			$3,218	$0	$0	$3,218	$3,260	$0	$0	$3,260
40		220 E. 23RD STREET COSTA MESA	0 Square Feet 189 PLAYGROUND EQUIP	Class: U UNKNOWN EQ PP NO EQ RT NO	NO	No			$0	$1,070	$0	$1,070	$0	$1,076	$0	$1,076
41		1040 PAULARINO COSTA MESA	0 Square Feet 191 ACTIVITY AREA & STD	Class: C MASONRY CONST/WOOD ROOF EQ PP NO EQ RT NO	NO	No			$39,367	$0	$0	$39,367	$39,878	$0	$0	$39,878
42		1040 PAULARINO COSTA MESA	0 Square Feet 192 RESTROOMS	Class: C MASONRY CONST/WOOD ROOF EQ PP NO EQ RT NO	NO	No			$33,896	$0	$0	$33,896	$34,337	$0	$0	$34,337
43		1040 PAULARINO COSTA MESA	0 Square Feet 199 YARD VALUES	Class: C MASONRY CONST/WOOD ROOF EQ PP NO EQ RT NO	NO	No			$63,502	$0	$0	$63,502	$64,327	$0	$0	$64,327
44		1040 PAULARINO COSTA MESA	0 Square Feet 190 RECREATION & GARDEN	Class: U UNKNOWN EQ PP NO EQ RT NO	NO	No			$6,543	$0	$0	$6,543	$6,628	$0	$0	$6,628
45		1040 PAULARINO COSTA MESA	0 Square Feet 190 PARK & RECREATION	Class: U UNKNOWN EQ PP NO EQ RT NO	NO	No			$25,315	$0	$0	$25,315	$25,644	$0	$0	$25,644
46		970 ARLINGTON COSTA MESA	0 Square Feet 201 OFFICE	Class: D ALL COMBUSTIBLE EQ PP NO EQ RT NO	NO	No			$65,069	$0	$0	$65,069	$65,915	$0	$0	$65,915
47		970 ARLINGTON COSTA MESA	0 Square Feet 202 RESTROOMS	Class: C MASONRY CONST/WOOD ROOF EQ PP NO EQ RT NO	NO	No			$55,778	$0	$0	$55,778	$56,503	$0	$0	$56,503

PROPERTY SCHEDULE
CITY OF COSTA MESA
FEBRUARY 21, 1992

REAL PROPERTY TREND FACTOR 1.30%
PERSONAL PROPERTY TREND FACTOR 0.60%

LOC. CND #	ID	ADDRESS	OCCUPANCY	CONSTRUCTION	EQ REAL	AUTO SPKLR	YEAR BUILT	YEAR APPRS	1991 REAL PROPERTY	1991 PERSONAL PROPERTY	1991 BI / RENTS	1991 TOTALS	1992 REAL PROPERTY	1992 PERSONAL PROPERTY	1992 BI / RENTS	1992 TOTALS
42		970 ARLINGTON COSTA MESA	0 Square Feet 203 RESTROOMS	Class: C MASONRY CONST/WOOD ROOF EQ PP NO EQ RT NO	NO	NO			$55,778	$0	$0	$55,778	$56,503	$0	$0	$56,503
43		970 ARLINGTON COSTA MESA	0 Square Feet 204 CARPENTRY & WATER CO	Class: B ALL REINFORCED CONCRETE EQ PP NO EQ RT NO	NO	NO			$34,325	$38,255	$0	$72,581	$34,771	$38,485	$0	$73,256
50		970 ARLINGTON COSTA MESA	0 Square Feet 205 STORAGE & SHED	Class: D ALL COMBUSTIBLE EQ PP NO EQ RT NO	NO	NO			$4,398	$107,379	$0	$111,777	$4,455	$108,023	$0	$112,478
51		970 ARLINGTON COSTA MESA	0 Square Feet 207 SNACK SHOP	Class: D ALL COMBUSTIBLE EQ PP NO EQ RT NO	NO	NO			$8,796	$0	$0	$8,796	$8,910	$0	$0	$8,910
52		970 ARLINGTON COSTA MESA	0 Square Feet 209 YARD VALUES	Class: U UNKNOWN EQ PP NO EQ RT NO	NO	NO			$197,155	$113,002	$0	$310,157	$199,718	$113,680	$0	$313,398
53		970 W 18TH STREET COSTA MESA	0 Square Feet 211 RESTROOMS & SHELTER	Class: C MASONRY CONST/WOOD ROOF EQ PP NO EQ RT NO	NO	NO			$455,881	$0	$0	$455,881	$461,607	$0	$0	$461,807
54		970 W 18TH STREET COSTA MESA	0 Square Feet 212 RESTROOMS	Class: D ALL COMBUSTIBLE EQ PP NO EQ RT NO	NO	NO			$51,488	$0	$0	$51,488	$52,157	$0	$0	$52,157
55		970 W 18TH STREET COSTA MESA	0 Square Feet 213 PARK SHELTER	Class: C MASONRY CONST/WOOD ROOF EQ PP NO EQ RT NO	NO	NO			$96,218	$27,379	$0	$123,597	$97,468	$27,543	$0	$125,012
56		570 W 18TH STREET COSTA MESA	0 Square Feet 214 HANDBALL CT STAGE & STORAGE	Class: C MASONRY CONST/WOOD ROOF EQ PP NO EQ RT NO	NO	NO			$96,218	$0	$0	$96,218	$97,468	$0	$0	$97,468
57		570 W 18TH STREET COSTA MESA	0 Square Feet 219 YARD VALUES	Class: D ALL COMBUSTIBLE EQ PP NO EQ RT NO	NO	NO			$162,515	$8,770	$0	$171,285	$164,628	$8,823	$0	$173,451
58		601 HAMILTON COSTA MESA	0 Square Feet RAE COMMUNITY CENTER	Class: U UNKNOWN EQ PP NO EQ RT NO	NO	NO			$0	$17,243	$0	$17,243	$0	$17,346	$0	$17,346
59		2153 FAIRVIEW COSTA MESA	0 Square Feet 221 RESIDENCE	Class: D ALL COMBUSTIBLE EQ PP NO EQ RT NO	NO	NO			$48,270	$0	$0	$48,270	$48,857	$0	$0	$48,857

PROPERTY SCHEDULE
CITY OF COSTA MESA
FEBRUARY 21, 1992

REAL PROPERTY TREND FACTOR: 1.30%
PERSONAL PROPERTY TREND FACTOR: 0.60%

LOC #	2ND ID	ADDRESS	OCCUPANCY	CONSTRUCTION	EQ REAL	AUTO SPKLR	YEAR BUILT	YEAR APPRS	1991 REAL PROPERTY	1991 PERSONAL PROPERTY	1991 BI / RENTS	1991 TOTALS	1992 REAL PROPERTY	1992 PERSONAL PROPERTY	1992 BI / RENTS	1992 TOTALS
60		286 DEL MAR AVENUE COSTA MESA	0 Square Feet 231 RESIDENCE	Class: D ALL COMBUSTIBLE EQ PP NO EQ RT NO	NO	No			$37,221	$0	$0	$37,221	$37,705	$0	$0	$37,705
61		286 DEL MAR AVENUE COSTA MESA	0 Square Feet 232 GUEST HOUSE	Class: D ALL COMBUSTIBLE EQ PP NO EQ RT NO	NO	No			$15,339	$0	$0	$15,339	$15,538	$0	$0	$15,538
62		2151 HARBOR COSTA MESA	0 Square Feet 241 USED CAR SALES	Class: D ALL COMBUSTIBLE EQ PP NO EQ RT NO	NO	No			$26,280	$0	$0	$26,280	$26,622	$0	$0	$26,622
63		155 DEL MAR AVENUE COSTA MESA	0 Square Feet RESIDENCE	Class: D ALL COMBUSTIBLE EQ PP NO EQ RT NO	NO	No			$143,522	$0	$0	$143,522	$145,388	$0	$0	$145,388
64		170 DEL MAR AVENUE COSTA MESA	0 Square Feet RESIDENCE	Class: D ALL COMBUSTIBLE EQ PP NO EQ RT NO	NO	No			$285,864	$0	$0	$285,864	$289,580	$0	$0	$289,580
65		210 DEL MAR AVENUE COSTA MESA	0 Square Feet RESIDENCE	Class: D ALL COMBUSTIBLE EQ PP NO EQ RT NO	NO	No			$85,384	$0	$0	$85,384	$86,494	$0	$0	$86,494
66		1855 PARK COSTA MESA	0 Square Feet 490 LIBRARY	Class: C MASONRY CONST/WOOD ROOF EQ PP NO EQ RT NO	NO	No			$1,459,091	$0	$0	$1,459,091	$1,478,059	$0	$0	$1,478,059
67		1860 ANAHEIM BLVD. COSTA MESA	0 Square Feet 390 DOWNTOWN COMMUNITY CENTER	Class: D ALL COMBUSTIBLE EQ PP NO EQ RT NO	NO	No			$671,378	$22,860	$0	$694,238	$680,106	$22,997	$0	$703,104
68		1975 BALEARIC DRIVE COSTA MESA	0 Square Feet	Class: D ALL COMBUSTIBLE EQ PP NO EQ RT NO	NO	No			$840,966	$5,990	$0	$846,956	$851,898	$6,026	$0	$857,924
69		1975 BALEARIC DRIVE COSTA MESA	0 Square Feet 460 PLAYGROUND EQUIPMENT	Class: U UNKNOWN EQ PP NO EQ RT NO	NO	No			$2,847	$0	$0	$2,847	$2,864	$0	$0	$2,884
70		224 DEL MAR AVENUE COSTA MESA	0 Square Feet NOW PART OF DEL MAR DR	Class: D ALL COMBUSTIBLE EQ PP NO EQ RT NO	NO	No			$211,314	$0	$0	$211,314	$214,061	$0	$0	$214,061
71		282 DEL MAR AVENUE COSTA MESA	0 Square Feet RESIDENCE	Class: D ALL COMBUSTIBLE	NO	No			$117,993	$0	$0	$117,993	$119,527	$0	$0	$119,527

PROPERTY SCHEDULE
CITY OF COSTA MESA
FEBRUARY 21, 1992

REAL PROPERTY TREND FACTOR: 1.30%
PERSONAL PROPERTY TREND FACTOR: 0.60%

LOC CMD # ID	ADDRESS	OCCUPANCY	CONSTRUCTION	EQ REAL	AUTO SPKLR	YEAR BUILT	YEAR APPRS	1991 REAL PROPERTY	1991 PERSONAL PROPERTY	1991 BI / RENTS	1991 TOTALS	1992 REAL PROPERTY	1992 PERSONAL PROPERTY	1992 BI / RENTS	1992 TOTALS
			EQ PP NO EQ RT NO												
72	2969 MESA DRIVE EAST COSTA MESA	0 Square Feet 051 MESA VERDE LIBRARY	Class: D ALL COMBUSTIBLE EQ PP NO EQ RT NO	NO	No			$707,527	$0	$0	$707,527	$716,725	$0	$0	$716,725
73	CIVIC CENTER ANNEX COSTA MESA	0 Square Feet COMMUNICATIONS CENTER	Class: B ALL REINFORCED CONCRETE EQ PP NO EQ RT NO	NO	No			$1,478,907	$228,800	$0	$1,707,707	$1,498,133	$230,172	$0	$1,728,305
74	1845 PARK COSTA MESA	0 Square Feet 620 NEIGHBORHOOD CENTER	Class: B ALL REINFORCED CONCRETE EQ PP NO EQ RT NO	NO	No			$3,388,213	$66,599	$0	$3,454,811	$3,432,260	$66,998	$0	$3,499,258
75	695 W. 19TH STREET COSTA MESA	0 Square Feet OLD CITY HALL SITE	Class: B ALL REINFORCED CONCRETE EQ PP NO EQ RT NO	NO	No			$1,353,843	$0	$0	$1,353,843	$1,371,443	$0	$0	$1,371,443
76	LIONS PARK COSTA MESA	0 Square Feet 640 HISTORICAL BUILDINGS	Class: D ALL COMBUSTIBLE EQ PP NO EQ RT NO	NO	No			$199,086	$2,139	$0	$201,225	$201,674	$2,152	$0	$203,826
77	VARIOUS LOCATIONS COSTA MESA	0 Square Feet EQUIPMENT ADDITIONS	Class: U UNKNOWN EQ PP NO EQ RT NO	NO	No			$0	$224,918	$0	$224,918	$0	$226,267	$0	$226,267
78	VARIOUS LOCATIONS COSTA MESA	0 Square Feet BUS SHELTERS	Class: U UNKNOWN EQ PP NO EQ RT NO	NO	No			$161,451	$0	$0	$161,451	$163,550	$0	$0	$163,550
79	VARIOUS LOCATIONS COSTA MESA	0 Square Feet DISPATCH SYSTEMS	Class: U UNKNOWN EQ PP NO EQ RT NO	NO	No			$775,426	$0	$0	$775,426	$785,507	$0	$0	$785,507
80	2450 VANGUARD COSTA MESA	0 Square Feet 690 CIVIC CENTER FIRE STATION	Class: U UNKNOWN EQ PP NO EQ RT NO	NO	No			$1,156,596	$39,987	$0	$1,196,583	$1,171,631	$40,227	$0	$1,211,858
81	1878 PLACENTIA COSTA MESA	0 Square Feet 650 POLICE SUB-STATION	Class: U UNKNOWN EQ PP NO EQ RT NO	NO	No			$0	$1,614	$0	$1,614	$0	$1,623	$0	$1,623
82	CALIFORNIA SCHOOL COSTA MESA	0 Square Feet PORTABLE EQUIP SHELTERS	Class: U UNKNOWN EQ PP NO EQ RT NO	NO	No			$1,260	$0	$0	$1,260	$1,276	$0	$0	$1,276
83	KAISER SCHOOL	0 Square Feet	Class: U	NO	No			$1,260	$0	$0	$1,260	$1,276	$0	$0	$1,276

PROPERTY SCHEDULE
CITY OF COSTA MESA
FEBRUARY 21, 1992

REAL PROPERTY TREND FACTOR 1.30%
PERSONAL PROPERTY TREND FACTOR: 0.60%

LOC. #	2ND ID	ADDRESS	OCCUPANCY	CONSTRUCTION	EQ REAL	AUTO SPKLR	YEAR BUILT	YEAR APPRS	1991 REAL PROPERTY	1991 PERSONAL PROPERTY	1991 BI / RENTS	1991 TOTALS	1992 REAL PROPERTY	1992 PERSONAL PROPERTY	1992 BI / RENTS	1992 TOTALS
		COSTA MESA	PORTABLE EQUIP SHELTER	UNKNOWN EQ PP NO EQ RT NO												
84		FOREMAN SCHOOL COSTA MESA	0 Square Feet PORTABLE EQUIP SHELTER	Class: U UNKNOWN EQ PP NO EQ RT NO	NO	No			$1,260	$0	$0	$1,260	$1,276	$0	$0	$1,276
85		COLLEGE PARK SCHOOL COSTA MESA	0 Square Feet PORTABLE EQUIP SHELTERS	Class: U UNKNOWN EQ PP NO EQ RT NO	NO	No			$1,260	$0	$0	$1,260	$1,276	$0	$0	$1,276
86		VARIOUS LOCATIONS COSTA MESA	0 Square Feet MOBILE EQUIPMENT/MOWERS	Class: U UNKNOWN EQ PP NO EQ RT NO	NO	No			$0	$96,108	$0	$96,108	$0	$96,685	$0	$96,685
87		VARIOUS LOCATIONS COSTA MESA	0 Square Feet VARIOUS WORK VEHICLES	Class: U UNKNOWN EQ PP NO EQ RT NO	NO	No			$0	$1,607,386	$0	$1,607,386	$0	$1,617,031	$0	$1,617,031
88		VARIOUS LOCATIONS COSTA MESA	0 Square Feet FIRE DEPT VEHICLES	Class: U UNKNOWN EQ PP NO EQ RT NO	NO	No			$0	$1,742,592	$0	$1,742,592	$0	$1,753,048	$0	$1,753,048
89		VARIOUS LOCATIONS COSTA MESA	0 Square Feet POLICE LEASE VEHICLES	Class: U UNKNOWN EQ PP NO EQ RT NO	NO	No			$0	$1,178,311	$0	$1,178,311	$0	$1,185,380	$0	$1,185,380
				GRAND TOTAL:					$31,424,828	$10,436,720	$150,000	$42,011,547	$31,633,350	$10,499,340	$150,000	$42,482,690
				SPRINKLERED -					$0	$0	$0	$0	$0	$0	$0	$0
				UNSPRINKLERED -					$31,424,828	$10,436,720	$150,000	$42,011,547	$31,633,350	$10,499,340	$150,000	$42,482,690
				EARTHQUAKE -					$12,218,803	$3,607,501	$150,000	$15,976,305	$12,377,648	$3,629,146	$150,000	$16,156,794

ATTACHMENT IV

PUBLIC HEARING HIGHLIGHTS

ATTACHMENT V

LEGAL REPORTS/INTERPRETATIONS

CITY OF COSTA MESA

INTER OFFICE MEMORANDUM

June 11, 1992

TO Tony C' De Baca FROM Sally E. May, SEM
Deputy City Attorney

Re: ADA "Transition Plan"

Below is an outline that may aid in drafting the City's ADA "Transition Plan." The Plan must, at a minimum, include the following:

I. Current Physical Obstacles

Identify physical obstacles in City's facilities that limit the accessibility of its programs or activities to individuals with disabilities.

This would include provision for curb ramps or other sloped areas where pedestrian walks cross curbs.

II. Methods for Making Facilities Accessible

Describe in detail the methods that will be used to make the facilities accessible.

III. Schedule of Compliance

Specify the schedule for taking the steps necessary to achieve compliance, and if the time period of the transition plan is longer than one year, identify steps that will be taken during each year of the transition period. If structural changes are undertaken to comply, such changes must be made by January 26, 1995.

With respect to curb ramps or other sloped areas where pedestrian walks cross curbs, priority must be given to walkways serving entities covered by the Act, including State and local government offices and facilities, transportation, places of public accommodation, and employers, followed by walkways serving other areas.

IV. Responsible Official

Indicate the official responsible for implementation of the plan.

If you have any questions regarding this matter, please contact our office.