CITY OF COSTA MESA

ORANGE COUNTY, CALIFORNIA

NOTICE TO BIDDERS, PROPOSAL, CONTRACT AND SPECIAL PROVISIONS

FOR

JACK HAMMETT SPORTS COMPLEX PARKING LOT AND ADA UPGRADES PROJECT

CITY PROJECT NO. 21-05

Prepared Under the Direction of:

Seung Yang, P.E.

City Engineer

Checked by _____

TABLE OF CONTENTS

PAGE NUMBER

TABLE OF CONTENTS ..... ii THRU iii

SECTION A

NOTICE INVITING BIDS ..... N-1 THRU N-2

SECTION B

INFORMATION FOR BIDDERS B-1

1 PREPARATIONS OF BID FORM B-1
2 QUALIFICATION OF BIDDERS B-1
3 BID SECURITY B-1
4 NON-COLLUSION AFFIDAVIT B-1
5 SIGNATURE B-1
6 CORRECTIONS B-1
7 DELIVERY OF PROPOSAL B-1
8 BID DEPOSIT RETURN B-1
9 TAXES B-2
10 WITHDRAWAL OF BIDS B-2
11 AGREEMENT AND BONDS B-2
12 FORFEITURE FOR FAILURE TO POST SECURITY AND EXECUTE AGREEMENT B-2
13 BIDDERS INTERESTED IN MORE THAN ONE BID B-2
14 EXAMINATION OF SITE AND CONTRACT DOCUMENTS B-2
15 INTERPRETATION OF PLANS AND DOCUMENTS B-2
16 ADDENDA B-3
17 QUESTIONS TO THE ENGINEER B-3
18 EQUIVALENT MATERIALS B-3
19 EVIDENCE OF RESPONSIBILITY B-3
20 LEGAL RESPONSIBILITIES B-3
21 ANTI-DISCRIMINATION B-3
22 DRUG-FREE WORKPLACE POLICY B-3
23 BID PROTEST PROCEDURES B-4
24 ASSEMBLY BILL 626 ..... B-4

REQUEST FOR INTERPRETATION OF CONTRACT DOCUMENTS B-5

SECTION C

PROPOSAL ..... P-1 THRU P-20

SECTION D

GENERAL PROVISIONS

PART 1 - GENERAL PROVISIONS GP-1

SECTION 1 GENERAL, TERMS, DEFINITIONS, ABBREVIATIONS, UNITS OF MEASURE, AND SYMBOLS GP-1
SECTION 2 SCOPE OF THE WORK GP-6
SECTION 3 CONTROL OF THE WORK GP-9

SECTION 4 CONTROL OF MATERIALS GP-16
SECTION 5 LEGAL RELATIONS AND RESPONSIBILITIES GP-17
SECTION 6 PROSECUTION AND PROGRESS OF THE WORK GP-19
SECTION 7 MEASUREMENT AND PAYMENT GP-22
SECTION 8 FACILITIES FOR AGENCY PERSONNEL GP-28

SECTION E

SPECIAL PROVISIONS SP-1
PART 1 - GENERAL SP-1
SECTION 100: GENERAL SP-1
PART 4 - EXISTING IMPROVEMENTS SP-4
SECTION 400 PROTECTION AND RESTORATION SP-4
SECTION 402 UTILITIES SP-4
SECTION 403 MANHOLE AND VALVE ADJUSTMENT AND RECONSTRUCTION SP-9
TECHNICAL SPECIFICATIONS
1 TABLE OF CONTENTS ..... 1 PAGES
2 CIVIL ..... 41 PAGES
3 LANDSCAPE ARCHITECTURE ..... 76 PAGES
4 ARCHITECTURAL METHODS AND MATERIALS ..... 74 PAGES
5 ELECTRICAL ..... 52 PAGES

SECTION F

MISCELLANEOUS CONTRACT DOCUMENTS (SAMPLE)
1 AGREEMENT (SAMPLE) ..... 22 PAGES
2 COUNCIL POLICY (DRUG-FREE WORKPLACE) ..... 3 PAGES
3 BONDS ..... 2 PAGES
4 INSURANCE (SAMPLE) ..... 6 PAGES
5 PERMIT APPLICATION ..... 1 PAGE
6 APPLICATION FOR BUSINESS LICENSE ..... 2 PAGE
7 W-9 REQUEST FOR TAXPAYER I.D. NUMBER & CERTIFICATION ..... 4 PAGE

SECTION G

APPENDICES
APPENDIX "A" PROJECT LOCATION AND MAP ..... 1 PAGES
APPENDIX "B" STAGING AREAS MAP ..... 1 PAGES
APPENDIX "C" CITY AND CALTRANS STANDARD DRAWINGS ..... 5 PAGES
APPENDIX "D" EXISTING DOCUMENTS ..... 1 PAGES
APPENDIX "E" UTILITIES LAYOUT (2007) ..... 2 PAGES

- SECTION A -

CITY OF COSTA MESA
ORANGE COUNTY, CALIFORNIA

NOTICE INVITING BIDS

NOTICE IS HEREBY GIVEN that the City of Costa Mesa ("City") invites sealed bids, to be submitted electronically only, for the following project:

JACK HAMMETT SPORTS COMPLEX PARKING LOT AND ADA UPGRADES PROJECT #21-05

1. **BID SUBMISSION AND OPENING:** Bids must be submitted electronically via the City of Costa Mesa's PlanetBids portal before the deadline of **10:00 A.M., Tuesday, September 28**, **2021**, at which time or shortly thereafter the City Clerk will open bids electronically through PlanetBids, and the bid results will be posted online via PlanetBids. No paper bids or any other form of submittal will be accepted outside of PlanetBids. Any bid received after the scheduled closing time for the receipt of bids will be rejected. The City is not responsible for and accepts no liability in the event a response is late due to any network, internet, or any other technical difficulty or interruption. It shall be the sole responsibility of the bidder to ensure that his/her/its bid is received by the deadline.

   To access the bid documents and bid on this project, potential vendors and bidders must first register through the City's PlanetBids portal at: https://www.planetbids.com/portal/portal.cfm?CompanyID=45476.

2. **SCOPE OF WORK AND BID DOCUMENTS:** The Scope of Work includes, but is not limited to, the parking lot improvements, slurry seal, pavement removal and replacement, striping, excavation, backfill, compaction, concrete flatwork, ADA curb ramps, curbs, curbs and gutters, electrical runs to the pull boxes for the storage building, all grading, retaining walls, fencing, lighting, irrigation, and landscaping, rough and precise grading, foundation, construction and installation of one new storage building, all electrical and mechanical work within the building, finish grading, and all other work as described within the Plans and as described within the Specifications associated with the Project.

   The plans, specifications, and bid documents for this project can be obtained via the City's PlanetBids portal at: https://www.planetbids.com/portal/portal.cfm?CompanyID=45476.

   It is the bidder's responsibility to ensure that the most current version of the solicitation, including any addenda, has been downloaded. Bids received without the applicable addenda will be rejected as incomplete.

3. **PRE-BID MEETING OR JOB WALK:** There will be a ***mandatory*** pre-bid job walk at 10:00 a.m. on Wednesday, September 8, 2021 at the Jack Hammett Sports Complex, Picnic Area adjacent to the facility restrooms at 2750 Fairview Road, Costa Mesa, California.

4. **BID CONTENTS:** All bids must be submitted on the proposal form included in the bid documents. No bid will be considered unless it is made on the proposal form furnished by the City and made in accordance with the provisions of the bid requirements.

5. **BID SECURITY:** Each bidder must submit a certified check, cashier's check, or a bid bond, made payable to or in favor of the City of Costa Mesa, in an amount equal to at least ten percent (10%) of the total amount of the bid, to the Costa Mesa City Clerk prior to the bid submission deadline. No bid will be considered unless such certified check, cashier's check, or bid bond is received by the City Clerk prior to the bid submission deadline.

6. **CONTRACTOR'S LICENSE:** A valid **California Contractor's License Class "A" (General Engineering Contractor)** issued by the California Contractors State License Board is required at the time the contract is awarded pursuant to California Public Contract Code section 3300. Each bidder must also be qualified as required by law at the time of the bid opening.

7. **REGISTRATION WITH THE DEPARTMENT OF INDUSTRIAL RELATIONS:** Pursuant to Labor Code sections 1725.5 and 1771.1, no contractor or subcontractor shall be qualified to bid on, be listed in a bid proposal, subject to the requirements of Section 4104 of the Public Contract Code, or engage in the performance of any contract for public work unless registered and qualified pursuant to Labor Code section 1725.5.

8. **PREVAILING WAGES:** This project is a "public work" subject to prevailing wage requirements. Pursuant to provisions of Sections 1770 et seq. of the California Labor Code, all works employed on the project shall be paid not less than the general prevailing rate of per diem wages, as determined by the Director of the Department of Industrial Relations (DIR) for work of a similar character in the locality in which the work is performed, and not less than the general prevailing rate of per diem wages for holiday and overtime work. Copies of the prevailing rate of per diem wages are on file with Costa Mesa Public Services Department and are available to any interested party upon request. The applicable State prevailing wages are also set forth on the Department of Industrial Relations' website: http://www.dir.ca.gov; these rates are subject to predetermined increases. The prime contractor shall post a copy of the DIR's determination of the prevailing rate of per diem wages at each job site. This project is subject to compliance monitoring and enforcement by the DIR.

9. **PAYMENT BOND AND PERFORMANCE BOND:** A Payment Bond and a Performance Bond, each in the amount of 100% of the contract amount, will be required of the successful bidder prior to award of the contract.

10. **RETENTION:** The City withholds five percent (5%) of each progress payment as retention. Pursuant to Public Contract Code section 22300, the successful bidder may substitute certain securities for money withheld by the City to ensure performance of the contract. At the request and expense of the contractor, securities equivalent to the amount withheld shall be deposited with the public agency, or with a state or federally chartered bank in this state as the escrow agent, who shall then pay those moneys to the contractor. Securities will be returned to the contractor upon satisfactory completion of the contract.

11. **NON-DISCRIMINATION:** The bidding process and contract are subject to State and Federal non-discrimination requirements, including but not limited to the requirement that no person or business shall discriminate on the basis of race, color, national origin, ancestry, religious creed, physical disability, mental disability, medical condition, marital status, sex, gender, gender expression, gender identity, sexual orientation, age, or military or veteran status in its solicitation, selection, hiring, or treatment of individuals or businesses in connection with the bidding process or work performed for the City in connection with the project.

12. **CITY'S RIGHT TO REJECT BIDS:** The City of Costa Mesa reserves the right, in its sole discretion, to reject any or all bids, or to waive any minor irregularities or informalities in any bid.

13. **ADDITIONAL REQUIREMENTS:** This project is subject to local, State, and Federal regulations and requirements, as detailed in the bid documents.

For all inquiries, please contact Project Manager Naz Mokarram, Public Services Department, via e-mail at naz.mokarram@costamesaca.gov.

Brenda Green, City Clerk
City of Costa Mesa
Dated: August 24, 2021

- SECTION B -
INFORMATION FOR BIDDERS

1. **PREPARATION OF BID FORM:** The City of Costa Mesa (City) requires that bids be submitted on the proposal available on *PlanetBids* at such time and place as is stated in the Notice Inviting Bids. All information requested in the bid forms must be provided. All bids shall be submitted electronically via the City's public bidding platform, *PlanetBids* **only**. No other form of submittal shall be accepted. It is the sole responsibility of the Bidder to see that his bid is received in proper time. Any bid received after the scheduled closing time for receipt of bids will be **rejected**. Each Bidder is responsible for acknowledging all addenda.

2. **QUALIFICATION OF BIDDERS:** Each Bidder shall submit a list of Construction Project References indicating Public Works and/or similar construction projects completed or in progress within the last 24 months. Forms for this purpose are furnished with the bid package.

3. **BID SECURITY / BID BOND:** Each bid shall be accompanied by one of the following: cash, cashier's check made payable to the City, a certified check made payable to the City, or a Bidder's Bond executed by an admitted surety insurer, made payable to the City, in an amount not less than 10% of the maximum amount of the bid. This original bid security / bid bond must be submitted to the City Clerk's Office *at least one hour* ***prior*** to the bid submission deadline. Any and all **late** submittals of the bid security / bid bond **shall** be rejected, and it is the bidder's responsibility, *not* the delivery service, to ensure said bid security / bid bond is delivered timely to the City Clerk's office. The Bidder's Bond shall be signed by both, the Bidder and the Surety; and both signatures shall be notarized. The bid security shall be given as a guarantee that the Bidder, if awarded the work, shall execute the contract in conformity with the Contract Documents and shall provide the surety bond or bonds as specified therein within fourteen (14) calendar days after a written Notice of Intent to Award Contract is deposited in the mail. In the case of refusal or failure to enter into said contract, the check or bond, as the case may be, shall be forfeited to the City.

4. **NONCOLLUSION AFFIDAVIT**: Each bid shall be accompanied by a notarized Noncollusion Affidavit on a form which is included in the Contract Documents.

5. **SIGNATURE:** Via the *PlanetBids* platform, the bid must be *electronically* or *digitally* signed in the name of the Bidder and must be person or persons duly authorized to sign the bid on behalf of the Bidder.

6. **CORRECTIONS:** Any corrections made to the submitted bid must be made electronically via *PlanetBids*.

7. **DELIVERY OF PROPOSAL:** Proposals shall be submitted electronically via PlanetBids: *https://www.planetbids.com/portal/portal.cfm?CompanyID=45476*. No other form of submittal shall be accepted by the City.

8. **BID DEPOSIT RETURN:** Deposits of three of more low bidders, the number being at the discretion of the City, will be held for sixty (60) calendar days or until posting by the successful bidder of the Bonds and Certificates of Insurance required and return of executed copies of the Agreement, whichever first occurs, at which time the deposits will be returned.

9. **TAXES:** No mention shall be made in the proposal of Sales Tax, Use Tax or any other tax, as all amounts bid will be deemed and held to include any such taxes which may be applicable.

10. **WITHDRAWAL OF BIDS:** Any bidder may withdraw his bid either personally, by written request, or by telegraphic request confirmed in the manner specified above at any time prior to the scheduled closing time for receipt of bids.

11. **AGREEMENT AND BONDS:** The Agreement form, which the successful bidder, as Contractor, will be required to execute, and the forms and amounts of surety bonds and Certificate of Insurance which he will be required to furnish prior to the execution of the Agreement, are included in the Contract Documents and should be carefully examined by the Bidder. The successful Bidder will be required to submit **THREE (3)** executed copies of the Agreement, the Performance Bond, the Payment Bond and the Certificate of Insurance. Payment and performance bonds shall be issued by a surety who is listed in the latest revision of U.S. Department of Treasury Circular 570 and Code of Civil Procedure Section 995.120. The Performance Bond and the Payment Bond shall be signed by both, the Bidder and the Surety; and both signatures shall be notarized.

12. **FORFEITURE FOR FAILURE TO POST SECURITY AND EXECUTE AGREEMENT:** In the event the Bidder to whom the Notice of Intent to Award Contract is given fails or refuses to post the required bonds and Certificate of Insurance and return executed copies of the Agreement within fourteen (14) calendar days after notification, the City may declare the Bidder's bid deposit or bond forfeited as damages caused by the failure of the bidder to post such security and execute such copies of the Agreement, and may give Notice of Intent to Award Contract to the next lowest responsive and responsible bidder, or may call for new bids.

13. **BIDDERS INTERESTED IN MORE THAN ONE BID:** No person, firm or corporation shall be allowed to make, or file or be interested in more than one bid for the same work unless alternate bids are specifically called for.

14. **EXAMINATION OF SITE AND CONTRACT DOCUMENTS:** Each bidder shall visit the site of the proposed work and fully acquaint himself with the conditions relating to the construction and labor so that he may fully understand the facilities, difficulties, and restrictions attending the execution of the work under the contract. Bidders shall thoroughly examine and be familiar with the drawings and specifications. The failure or omission of any bidder to receive or examine any contract document, form, instrument, addendum, or other document or to visit the site and acquaint himself with conditions there existing shall in no way relieve any bidder from any obligation with respect to his bid or to the contract. The submission of a bid shall be taken as prima facie evidence of compliance with this section.

15. **INTERPRETATION OF PLANS AND DOCUMENTS:** If any Bidder contemplating submitting a bid for the proposed contract is in doubt as to the true meaning of any part of the drawings, specifications, or other Contract Documents, or finds discrepancies in, or omissions from the drawings and specifications, it may submit via PlanetBids a written request for an interpretation or correction thereof. The Bidder submitting the Request for Interpretation (RFI) shall be responsible for its prompt delivery and on the form included within this IFB (Page B-5) Any interpretation or correction of the Contract Documents will be made only by addendum duly uploaded to PlanetBids. No person is authorized to make any oral interpretation of any provision in the Contract Documents to any Bidder, and no Bidder is authorized to rely on any such unauthorized oral interpretation.

16. **ADDENDA:** The effect of all addenda to the Contract Documents shall be considered in the bid package and said addenda shall be made part of the Contract Documents and shall be returned with the bid package. Failure to submit any such addenda with the bid package may render the bid irregular and result in its rejection by the City.

17. **QUESTIONS TO THE ENGINEER:** Questions regarding the bid documents (i.e. Plans, Specifications, Contract Documents, Bid Forms, etc.) will be received via PlanetBids up to ten (10) working days prior to the bid opening. Questions asked after this time will not be addressed.

18. **EQUIVALENT MATERIALS:** Requests for the use of equivalents to those specified, must be submitted to the City. Only substitutions approved prior to bid due date via addenda Product Substitutions, will be considered. No substitutions will be considered after bid due date and contract award. It is the sole responsibility of the successful bidder to prove to the City that such a material is truly an equivalent.

19. **EVIDENCE OF RESPONSIBILITY:** Upon the request of the City, a bidder whose bid is under consideration for the award of the contract shall submit promptly to the City satisfactory evidence showing the Bidder's financial resources, its construction experience, and its organization and plant facilities available for the performance of the contract.

20. **LEGAL RESPONSIBILITIES:** All proposals must be submitted, filed, made and executed in accordance with State and Federal laws relating to bids for contracts of this nature whether the same or expressly referred to herein or not. Any Bidder submitting a proposal shall by such action thereby agree to each and all of the terms, conditions, provisions and requirements set forth, contemplated and referred to in the Plans, Specifications and other Contract Documents, and to full compliance therewith. Additionally, any Bidder submitting a proposal shall, by such action thereby, agree to pay at least the minimum prevailing per diem wages as provided in Section 1773, et. seq. of the Labor Code for each craft, classification or type of workman required as set forth by the Director of Industrial Relations of the State of California.

21. **ANTI-DISCRIMINATION:** It is the policy of the City that in connection with all work performed under contracts, there be no discrimination against any prospective or active employee engaged in the work because of race, color, ancestry, national origin, religious creed, sex, age, or marital status. The Contractor agrees to comply with applicable Federal and California laws including, but not limited to, the California Fair Employment Practice Act, beginning with Government Code Section 12900, and Labor Code Section 1735. In addition, the Contractor agrees to require like compliance by any subcontractors employed on the work by him/her.

22. **DRUG-FREE WORKPLACE POLICY:** Contractor, upon notification of contract award, shall establish a Drug-Free Awareness Program to inform employees of the dangers of drug abuse in the workplace, the penalties that may be imposed upon employees for drug abuse violations occurring in the workplace, and the employee assistance programs available to employees. Each employee engaged in the performance of a City contract must be notified of this Drug-Free Awareness Program, and must abide by its terms. Contractor shall conform to all the requirements of City's Policy No. 100-5. Failure to establish a program, notify employees, or inform the City of a drug-related workplace conviction will constitute a material breach of contract and cause for immediate termination of the contract by the City.

23. **BID PROTEST PROCEDURES:** Any bid protest must be submitted in writing before 5:00 PM of the 5th business day following bid openings. The initial protest document shall contain a complete statement of the basis for the protest. The protest shall refer to the specific portion of the document which forms the basis for the protest. The protest shall include the name, address and telephone number of the person representing the protesting party. The party filing the protest shall concurrently transmit a copy of the initial protest document and any attached documentation to all other parties with a direct financial interest which may be adversely affected by the outcome of the protest. Such parties shall include all other Bidders or proposers who appear to have a reasonable prospect of receiving an award depending upon the outcome of the protest. Upon receipt of a bid protest, the matter shall be reviewed by the Public Services Director, whose decision shall be final. This procedure supersedes the procedure of appeal outlined in City of Costa Mesa Municipal Code Section 2-303.

24. **ASSEMBLY BILL 626:** Assembly Bill 626 (AB 626), adds section 9204 to the Public Contract Code creating a claims resolution process applicable to any claim (as defined) by a contractor against a public entity filed in connection with a public works project. Section 9204 applies to public works contracts entered into on and after January 1, 2017. The legislation was supposed to sunset (end) on January 1, 2020, unless extended by subsequent legislation. The summary of Section 9204 is specified as follows:

    In the event of any dispute or controversy with the City over any matter whatsoever, the Contractor shall not cause any delay or cessation in or of Work, but shall proceed with the performance of the Work in dispute. The Contractor shall retain any and all rights provided that pertain to the resolution of disputes and protests between the parties. The Disputed Work will be categorized as an “unresolved dispute” and payment, if any, shall be as later determined by agreement or a court of law. The Contractor shall keep accurate, detailed records of all Disputed Work, claims and other disputed matters.

    All claims arising out of or related to the Contract Documents or this Project, and the consideration and payment of such claims, are subject to the Government Claims Act (Government Code Section 810 et seq.) with regard to filing claims. All such claims are also subject to the dispute procedures set forth in Public Contract Code Section 9204 and Public Contract Code Section 20104, et seq. (Article 1.5), to the extent each is applicable. This Contract hereby incorporates those provisions as through fully set forth herein. Thus, the Contractor or any Subcontractor must file a claim in accordance with the Government Claims Act as a prerequisite to filing a construction claim in compliance with Section 9204 and Section 20104 et seq. (if applicable), and must then adhere to Section 20104, et seq. and Section 9204, as applicable, pursuant to the definition of “claim” as individually defined therein.

REQUEST FOR INTERPRETATION OF CONTRACT DOCUMENTS

Date:

Time:

Company:

Contact Person:

Address:

Telephone:	**FAX:**

Plan Sheet:
Specification Section:

INTERPRETATION REQUESTED:

REPLY:

T0 A/E:

(Blank page)

- SECTION C -

PROPOSAL
FOR THE
JACK HAMMETT SPORTS COMPLEX PARKING LOT AND ADA UPGRADES
CITY PROJECT NO. 21-05

The Honorable City Council
City of Costa Mesa
77 Fair Drive
Costa Mesa, CA 92626

Dear Council Members:

In compliance with the **NOTICE INVITING BIDS FOR THE CITY OF COSTA MESA JACK HAMMETT SPORTS COMPLEX PARKING LOT AND ADA UPGRADES PROJECT NO. 21-05,** a copy which is hereto attached, the undersigned has carefully examined the location of the proposed work, the Plans, Specifications and other Contract Documents and is therefore satisfied as to the conditions to be encountered, as to the character, quality and quantity of work to be performed and materials to be furnished and as to the requirements of the Specifications and the Contract. It is mutually agreed that the submission of a proposal shall be considered prima facie evidence that the Bidder has made such examination.

If awarded the Contract, the undersigned agrees to commence the work under the Contract **WITHIN TEN (10) DAYS AFTER THE NOTICE TO PROCEED IS ISSUED, AND COMPLETE THE WORK WITHIN ONE-HUNDRED TEN (110) WORKING DAYS** from the first day of commencement of such work unless legal extension is granted in accordance with the terms set forth in the specifications.

Furthermore, the undersigned agrees to perform and complete the work as shown on the Plans and in accordance with the Specifications and other Contract Documents, and to furnish all labor, materials, tools and equipment necessary to complete the work in-place therefor, in the manner and time herein prescribed at the following prices, to wit:

(Blank page)

PROPOSAL SCHEDULE
BASE BID

Item	Description	Approx. Quantity	Unit	Unit Price	Total Amount
1	Mobilization	1	LS	$_____	$_____
2	Clearing & Grubbing	1	LS	$_____	$_____
3	Traffic Control & Public Safety	1	LS	$_____	$_____
4	Water Quality Best Management Practices (BMP's)	1	LS	$_____	$_____
5	Construction Survey and Monument Preservation	1	LS	$_____	$_____
6	Utility Potholing and Ground Penetrating Radar (GPR)	1	LS	$_____	$_____
7	Remove and Dispose of Existing AC Pavement	10,600	SF	$_____	$_____
8	Remove and Dispose of Existing Chain Link Fence	1,175	LF	$_____	$_____
9	Remove Existing Tree	14	EA	$_____	$_____
10	Remove and Dispose of Existing Light Pole and Foundation	5	EA	$_____	$_____
11	Remove and Dispose of Existing Sliding Gate	1	EA	$_____	$_____
12	Remove and Dispose of Existing Chain Link Gate	5	EA	$_____	$_____
13	Weed Abate, Crack Seal, Remove existing striping & pavement marking and construct Slurry Seal Type II	70,000	SF	$_____	$_____
14	Construct 5" thick AC Pavement Over Compacted 8" thick CMB	21,500	SF	$_____	$_____
15	Remove and Dispose Curb and Gutter	86	LF	$_____	$_____
16	Construct 6" Curb and Gutter Type (C-6") (W=18") Per City of Costa Mesa Std DWG No 312	300	LF	$_____	$_____
17	Remove and Dispose Concrete Curb	1,800	LF	$_____	$_____
18	Construct 6" Curb Type A1-6(150)	2,000	LF	$_____	$_____

Bidder's Initials_____

PROPOSAL SCHEDULE
BASE BID
(CONTINUED)

Item	Description	Approx. Quantity	Unit	Unit Price	Total Amount
19	Remove and Dispose Existing Curb Ramp	2	EA	$_____	$_____
20	Construct ADA Curb Ramp	3	EA	$_____	$_____
21	Construct Truncated Domes	7	EA	$_____	$_____
22	Remove and Dispose Concrete Gutter	30	LF	$_____	$_____
23	Construct 3' wide Concrete V-Gutter	30	LF	$_____	$_____
24	Adjust to Grade Existing Sewer Cleanout	6	EA	$_____	$_____
25	Furnish & Install Concrete Wheel Stop	11	EA	$_____	$_____
26	Sawcut and Remove PCC Sidewalk	7,800	SF	$_____	$_____
27	Construct Driveway Approach	2	EA	$_____	$_____
28	Construct 6" thick fill-in concrete over 6" CMB	25	SF	$_____	$_____
29	Furnish and Install Parking Sign	8	EA	$_____	$_____
30	Striping, Signing, Marking and Pavement Markers	1	LS	$_____	$_____
31	Paving 1a: Concrete Flatwork with Topcast Top-Surface Retarder Finish	12,850	SF	$_____	$_____
32	Paving 1c: Concrete Flatwork Heavy Sand Blast Finish	120	SF	$_____	$_____
33	Paving 1d: Interlocking Concrete Pavers	880	SF	$_____	$_____
34	Concrete Header (10" wide)	245	LF	$_____	$_____

Bidder's Initials_____

PROPOSAL SCHEDULE
BASE BID
(CONTINUED)

Item	Description	Approx. Quantity	Unit	Unit Price	Total Amount
35	Concrete Band (16" wide)	500	LF	$_____	$_____
36	18' Ht. Ball Barrier Fence (6' Chain Link Fence with Attached 12' Netting)	180	LF	$_____	$_____
37	Chain Link Fence - 8' High	415	LF	$_____	$_____
38	Chain Link Fence - 4' High	475	LF	$_____	$_____
39	Gate - Double Swing Chain Link, 8' High (12' Opening)	3	EA	$_____	$_____
40	Double Cantilever Sliding Gates - 8' Ht. (Chain Link Fabric) With Electronic Gate Opening & Closing Operators	1	LS	$_____	$_____
41	Rolling Chain Link Gate - 8' Ht. (20' Opening)	1	EA	$_____	$_____
42	Post & Rail Fence With Precast Column	530	LF	$_____	$_____
43	Column 'A' (8' Ht. Masonry Column w/ Precast Column Cap)	6	EA	$_____	$_____
44	Column 'B' (4.5' Ht. Masonry Column w/ Precast Column Cap)	4	EA	$_____	$_____
45	Precast Column 'C'	7	EA	$_____	$_____
46	Precast Sphere (60 Inch Dia.)	3	EA	$_____	$_____
47	Precast Soccer Ball (36 Inch Dia.)	12	EA	$_____	$_____
48	Precast Sphere (22 Inch Dia.)	4	EA	$_____	$_____
49	Double Parking Lot Barrier Gates	2	EA	$_____	$_____
50	Re-Install Existing Flagpole	1	LS	$_____	$_____
51	Bike Rack	10	EA	$_____	$_____

Bidder's Initials_____

PROPOSAL SCHEDULE
BASE BID
(CONTINUED)

Item	Description	Approx. Quantity	Unit	Unit Price	Total Amount
52	Pedestal Mounted Bottle Filler With Bi-Level Drinking Fountain	2	EA	$_____	$_____
53	Existing Irrigation Adjustments	1	LS	$_____	$_____
54	New Irrigation System	1	LS	$_____	$_____
55	Soil Preparation and Fine Grading	25,510	SF	$_____	$_____
56	Weed Abatement	25,510	SF	$_____	$_____
57	Tree - 36" Box	49	EA	$_____	$_____
58	Shrub - #15 Container	80	EA	$_____	$_____
59	Shrub - #5 Container	1,248	EA	$_____	$_____
60	Shrub - #1 Container	768	EA	$_____	$_____
61	Damaged Turf Replacement	19,600	SF	$_____	$_____
62	Wood Mulch (3" thick)	236	CY	$_____	$_____
63	(90) Day Maintenance	1	LS	$_____	$_____
64	Storage Building, 5-Units (890 SF)	1	LS	$_____	$_____
65	Electrical – Parking Lot	1	LS	$_____	$_____
66	Electrical – Storage Building	1	LS	$_____	$_____
67	Allowance for additional work items as directed by the City	1	FA	$ 45,000	$ 45,000
68	Allowance for unforeseen utility conflicts	1	FA	$ 45,000	$ 45,000
69	Allowance for unsuitable soil conditions and additional sound mitigation	1	FA	$ 35,000	$ 35,000

Bidder's Initials_____

PROPOSAL SCHEDULE
BASE BID
(CONTINUED)

TOTAL BASE BID AMOUNT (Figures):	$_____
TOTAL BASE BID AMOUNT (Words): _____ _____	

The award of the Contract shall be based on the lowest responsive Base Bid amount. The CITY also reserves the right to reject all Bids.

Bidder's Initials_____

PROPOSAL SCHEDULE
(CONTINUED)

NOTE:

1. The accuracy of estimate quantities as shown is not guaranteed; the Bidder shall make his/her own estimate from the drawings and field review for verification. If the unit price and the total amount are different, the unit price will control the bid. Payment shall be based on actual work done and/or actual quantities used.

2. The City reserves the right to delete one or more bid items and/or to increase or decrease bid items' quantities, at no additional cost to the City.

3. FA designates force account. Payment shall be made on a time and materials basis, only if directed by the ENGINEER.

4. (F) Designates Final Pay Item. When an item of work is designated as "FINAL PAY ITEM" in the Specifications, the estimated quantity for that item of work shall be the final pay quantity, unless the dimensions of any portion of that item are revised by the ENGINEER, or the item or any portion of the item is eliminated. If the dimensions of any portion of the item are revised, and the revisions result in an increase or decrease in the estimated quantity of that item of work, the final pay quantity for the item will be revised in the amount represented by the changes in the dimensions. If a final pay item is eliminated, the estimated quantity for the item will be eliminated. If a portion of a final pay item is eliminated, the final pay quantity will be revised in the amount represented by the eliminated portion of the item of work.

   The estimated quantity for each item of work designated as "FINAL PAY ITEM" in the Specifications, shall be considered as approximate only, and no guarantee is made that the quantity which can be determined by computations, based on the details and dimensions shown on the plans, will equal the estimated quantity. No allowance will be made in the event that the quantity based on computations does not equal the estimated quantity.

   In case of discrepancy between the quantity shown in the ENGINEER's Estimate for a final pay item and the quantity or summation of quantities for the same item shown on the plans, payment will be based on the quantity shown in the ENGINEER's Estimate.

_____
Bidder's Initials

PROPOSAL SCHEDULE
(CONTINUED)

(Please Type or Print)

Total Bid Amount (in written words) _____

_____ ($_____)
in figures

Contractor's Lawful Name: _____

Bidder's Name: _____ Bidder's Initials: _____

Contractor's License No. _____ Expiration: _____

Contractor's Taxpayer I.D. Number: _____

Contractor's PWC Registration Number: _____
_____

Signature: _____ Date: _____

Contractor's Address: _____

_____

Telephone Number: (_____) _____ Mobile No.:(_____) _____

Fax Number: (_____) _____ E-mail:_____

24-Hour Emergency Contacts:

_____ Telephone Number: (_____) _____
Name
Mobile No.: (_____) _____

_____ Telephone No.: (_____) _____
Name
Mobile No.: (_____) _____

_____ Telephone No.: (_____) _____
Name
Mobile No.: (_____) _____

_____
Bidder's Initials

PROPOSAL SCHEDULE
(CONTINUED)

The Contractor agrees that the City will not be held responsible if any of the approximate quantities shown in the foregoing proposal shall be found incorrect, and he shall not make any claim for damages or for loss of profits because of a difference between the quantities of the various classes of work as estimated and the work actually done. If any error, omission or misstatements shall be discovered in the estimated quantities, it shall not invalidate this contract or release the Contractor from the execution and completion of the whole or part of the work herein specified, in accordance with the specifications and the plans herein mentioned and the prices herein agreed upon and fixed therefore, or excuse him from any of the obligations or liabilities hereunder, or entitle him to any damages or compensation otherwise than as provided for in this contract.

The Contractor agrees that the City shall have the right to increase or decrease the quantity of any bid item or portion of the work or to omit portions of the work as may be deemed necessary or expedient, and that the payment for incidental items or work, not separately provided in the proposal shall be considered included in the price bid for other various items or work.

Accompanying this proposal is "Cash," "Certified Check," or "Bidder's Bond" (circle one) in the amount of _____ ($_____) equal to at least ten (10%) percent of the total bid price, payable to the City of Costa Mesa, to guarantee that within fourteen (14) days after written notice is deposited in the mail, or the bidder has received notice by telephone, the bidder will furnish proper Certificates of Insurance, and required bonds satisfactory to the City and execute a contract in accordance with the proposal and in the manner and form required by the contract documents.

The undersigned deposits the above-named security as a proposal guarantee and agrees that it shall be forfeited to the City of Costa Mesa as Liquidated Damages if the above requirements are not complied with.

_____
Bidder's Initials

Respectfully Submitted by:

Contractor's Business Name	Contractor Title
Business Address: Street	By Title
City State Zip	Contractor's License No. and Classification
Business Phone Number	Date
Name Title	Residence: Street
City State Zip	Residence phone Number

If the bid is by a corporation, state the names of the officers who can sign an agreement on behalf of the corporation and whether more than one officer must sign.

☐ Corporation Taxpayer I.D. Number: _____

	Can Sign	Must Sign
Name_____	☐	☐
Name_____	☐	☐
Name_____	☐	☐

If the bid is by a partnership or a joint venture, state the names and addresses of all general partners and joint venturers.

☐ Partnership or Joint Ventures Taxpayer I.D. Number: _____

_____

Name _____

Address _____

Name _____

Address _____

If the bidder is a sole proprietorship or another entity that does business under a fictitious name, the bid shall be in the real name of the bidder with a designation following showing "DBA (the fictitious name)"; provided, however, no fictitious name shall be used unless there is a current registration with the Orange County Recorder.

The full names and residences of all persons and parties interested in the foregoing proposal, as principals, are as follows:

NOTE: Give first and last names in full; in case of corporation, give names of President, Secretary, Treasurer and Manager, and affix corporate seal; in case of partnerships and joint ventures, give names of all the individual members.

_____ _____

_____ _____

_____ _____

_____ _____

_____
Bidder's Initials

Bidder shall signify receipt of all Addenda here, if any:

Addendum No.	Date Received	Bidder's Signature

CONSTRUCTION PROJECT REFERENCES

In order to more fully evaluate your firm's background and experience for the project herein proposed, it is requested that you submit a list of similar audio/visual installation projects completed utilizing Creston products, or in progress, within the last 36 months. This information will be used to evaluate whether the bid is responsive and or responsible to the call for bids.

Date Project Awarded	Awarding Agency	Agency's Contract Administrator

_____
Bidder's Initials

DESIGNATION OF SUBCONTRACTORS

In compliance with the "Subletting and Subcontracting Fair Practices Act" being Sections 4100-4113 of the Public Contract Code of the State of California, and any amendments thereto, each bidder shall set forth below the name and location of the place of business of each subcontractor who will perform work or labor or render service to the prime contractor in or about the construction of the work or improvement in an amount in excess of one-half (½) of one percent (1%) of the prime contractor's total bid or in the case of bids for the construction of streets or highways, including bridges, in excess of one-half (½) of one percent (1%) of the prime contractor's total bid or ten thousand ($10,000) dollars, whichever is greater. Bidder shall further set forth the portion of the work which will be done by each such subcontractor. Only one subcontractor for each such portion shall be listed.

If the contractor fails to specify a subcontractor for any portion of the work to be performed under the contract, he shall be deemed to have agreed to perform such portion himself, and he shall not be permitted to subcontract that portion of the work except under the conditions hereinafter set forth.

The CITY will be furnished copies of all subcontracts entered into by subcontractor for this project.

Subletting or subcontracting of any portion of the work to which no subcontractor was designated in the original bid, shall only be permitted in cases of public emergency or necessity, and then only after a finding reduced to writing as a public record of the Legislative Body of the owner.

All information must be filled out and typed. Please use additional pages in this format if needed.

Bid Item (s) Number	%Portion of Work	Name, Address and E-mail of Subcontractor	State License Number	Class	DIR Registration Number

_____
Bidder's Initials

DESIGNATION OF SUBCONTRACTORS
(Continued)

Bid Item (s) Number	%Portion of Work	Name, Address and E-mail of Subcontractor	State License Number	Class	DIR Registration Number

Bidder's Initials

BIDDER'S BOND TO ACCOMPANY PROPOSAL

(Required if the bidder desires to submit bond instead of a certified or cashier's check.)

KNOW ALL PEOPLE BY THESE PRESENTS:

That we,_____ as principals, and _____ as surety, are held and firmly bound unto the City of Costa Mesa, a municipal corporation, organized under the laws of the State of California and situated in Orange County in the sum of _____ ($_____) to be paid to the City, its successors and assigns, for which payment well and truly to be made, we bind ourselves, our heirs, executors, and administrators, successors or assigns, jointly and severally firmly by these presents.

THE CONDITION OF THIS OBLIGATION IS SUCH,

That is the certain proposal of the above bounden, _____, if accepted by the City of Costa Mesa, and if the above bounden, _____, his heirs, executors, administrators, successors and assigns, shall duly enter into and execute a contract for such construction, and shall execute and deliver the CERTIFICATE OF INSURANCE and the LABOR AND MATERIAL and the FAITHFUL PERFORMANCE BONDS described within fourteen (14) days from the date of the mailing of a notice of the above bounden, _____, by and from the City, that said contract is ready for execution, then this obligation shall become null and void; otherwise it shall be and remain in full force and virtue.

IN WITNESS WHEREOF:

We hereunto set our hands and seals this _____ day of _____, 20___.

_____	_____
_____	_____
_____	_____
Contractor/ Principal (Notary Acknowledgement to be attached)	Surety/Power of Attorney (Notary Acknowledgment to be attached)

_____
Bidder's Initials

CONTRACT ASSURANCE

The CONTRACTOR or subcontractor shall not discriminate on the basis of race, color, national origin, or sex in the performance of this contract. The CONTRACTOR shall carry out applicable requirements of 49 CFR part 26 in the award and administration of DOT-assisted contracts. Failure by the CONTRACTOR to carry out these requirements is a material breach of this contract, which may result in the termination of this contract or such other remedy as recipient deems appropriate.

The CONTRACTOR will require that the above provision is included in all subcontracts.

_____
Bidder's Initial

NONCOLLUSION AFFIDAVIT

The bidders, by its officers and agents or representatives present at the time of filing this bid, being duly sworn on their oaths say, that neither they nor any of them have in any way directly or indirectly entered into any arrangement or agreement with any other bidder, or with any public officer of such CITY OF COSTA MESA whereby such affiant or affiants or either of them has paid or is to pay to such bidder or public officer any sum of money, or has given or is to give to such other bidder or public officer anything of value whatever, or such affiant or affiants or either of them has not directly or indirectly, entered into any arrangement or agreement with any other bidder or bidders, which tends to or does lessen or destroy free competition in the letting of the contract sought for on the attached bids; that no bid has been accepted from any subcontractor or supplier through any bid depository, the By-Laws, Rules, or Regulations of which prohibit or prevent the Contractor from considering any bid from any subcontractor or supplier which is not processed through said bid depository, or which prevent any subcontractor or supplier from bidding to any Contractor who does not use the facilities or accept bids from or through such bid depository; that bidder has not bid as subcontractor to other bidders; that no inducement of any form or character other than that which appears upon the face of the bid will be suggested, offered, paid or delivered to any person of the contract, nor has this bidder any agreement or understanding of any kind whatsoever, with any person whomsoever to pay, deliver to, or share with any other person in any way or manner, any of the proceeds of the contracts sought by this bid.

_____
Contractor Firm Name

_____
Name of Principal

_____
Title

_____
Signature

Subscribed and sworn to before me by:

_____

This ____ day of _____, 20___.

My Commission Expires: _____

_____
Notary Public

_____
Bidder's Initials

CONTRACTOR'S CERTIFICATION
OF
WORKERS' COMPENSATION INSURANCE REQUIREMENTS
FOR
PUBLIC WORKS PROJECTS
(Labor Code §1861)

I am aware of the provisions of Section 3700 of the California Labor Code which requires every employer to be insured against liability for workers' compensation or to undertake self-insurance in accordance with the provisions of that Code, and I will comply with such provisions before commencing the performance of the work of this contract.

Dated: _____

CONTRACTOR

_____

_____
Company Name

PROJECT: CITY PROJECT NO. 21-05

_____
Bidder's Initials

DRUG-FREE WORKPLACE POLICY

CONTRACTOR, upon notification of contract award, shall establish a Drug-Free Awareness Program to inform employees of the dangers of drug abuse in the workplace, the penalties that may be imposed upon employees for drug abuse violations occurring in the workplace, and the employee assistance programs available to employees. Each employee engaged in the performance of a CITY contract must be notified of this Drug-Free Awareness Program, and must abide by its terms. Failure to establish a program, notify employees, or inform CITY of a drug-related workplace conviction will constitute a material breach of contract and cause for immediate termination of the contract by CITY.

CONTRACTOR shall conform to all the requirements of CITY'S Policy No. 100-5. A copy of this policy is attached to the sample contract agreement as Attachment No. 1 in the Project Specifications.

_____
Bidder's Initials

BIDDER/APPLICANT/CONTRACTOR CAMPAIGN

CONTRIBUTION DISCLOSURE FORM

Proposer/Consultant/Applicant is required to identify any campaign contribution or cumulative contributions greater than $249 to any City Council Member in the twelve months prior to submitting an application, proposal, statement of qualifications or bid requiring approval by the City Council.

Date	Name of Donor	Company/Business Affiliation	Name of Recipient	Amount

Except as described above, I/we have not made any campaign contribution in the amount of $250 or more to any Costa Mesa City Council Member in the twelve months preceding this Application/Proposal.

I declare under penalty of perjury under the laws of the State of California that the foregoing is true and correct.

_____
Bidder/Applicant/Proposer

_____
Date

_____
Bidder's Initials

- SECTION D -

GENERAL PROVISIONS

PART 1 - GENERAL

Except as hereinafter provided, the provisions of the 2018 edition of the “Standard Specifications for Public Works Construction” (“Green Book”), and all amendments thereto, adopted by the Joint Cooperative Committee of Southern California Chapter, American Public Works Association, Southern California District and Associated Contractors of California; hereinafter referred to as Standard Specifications, are adopted as the "Standard Specifications of the City of Costa Mesa" and shall be considered as a part of these specifications. Copies of the Standard Specifications are available from the publisher:

BNi Building News
1612 S. Clementine Street
Anaheim, California 92802
(714) 517-0971

Where specified in these specifications, the latest edition of the California Building Code, based on the latest edition of the International Building Code, the latest edition of the "Standard Specifications and Standard Plans of the State of California, Department of Transportation, Division of Highways," "Standard Plans of the Orange County Environmental Management Agency," and "Los Angeles County Flood Control District, Design Manual, Standard Drawings" shall apply or unless otherwise noted in these specifications or at the direction of the ENGINEER.

Where referenced in these Specifications, the latest edition of the “City of Costa Mesa Standard Drawings” and the “Work Area Traffic Control Handbook” (WATCH) published by Building News, Inc., shall also apply.

The section numbers of these General Provisions coincide with those of the said Standard Specifications. Only those sections requiring amendment, elaboration, or specifying options, are called out.

SECTION 1 – GENERAL, TERMS, DEFINITIONS, ABBREVIATIONS, UNITS OF MEASURE, AND SYMBOLS

1-1 GENERAL

[Add the following:].

The following modifications are made to the "Standard Specifications." If there is a conflict between the "Standard Specifications" and these modifications, these modifications shall have first precedence.

1-2 TERMS AND DEFINITIONS

[Add or redefine the following:].

(a) AGENCY	The City of Costa Mesa, California, hereinafter referred to as "CITY."
(b) BOARD	The City Council of the City of Costa Mesa, California, hereinafter referred to as "BOARD."
(c) CONTRACT DOCUMENTS	Documents including but not limited to the following: The proposal form P-1 through P-9b, Notice Inviting Bids, Standard Specifications, General Provisions, Special Provisions, Plans, Bonds, Insurance Certificates, Agreement, and all Addenda setting forth any modifications of the documents as further specified in contract agreement.
(d) ENGINEER	The administrating officer of the City of Costa Mesa or his authorized representative hereinafter referred to as ENGINEER.
(e) BIDDER	Any individual, firm, partnership, corporation, or combination thereof, submitting a bid proposal for the work contemplated in the contract documents, acting directly or through a duly authorized representative, hereinafter referred to as BIDDER.
(f) LEGAL ADDRESS OF CONTRACTOR	The legal address of the Contractor shall be the address given on the Contractor's bid and is hereby designated as the place to which all notices, letters or other communications to the Contractor shall be mailed or delivered.
(g) LABORATORY	An established laboratory approved and authorized by the ENGINEER for testing materials and work involved in the contract.

1-3 ABBREVIATIONS

CALTRANS	State of California, Department of Transportation, Division of Highways
O.C.E.M.A.	Orange County Environmental Management Agency
L.A.C.F.C.D.	Los Angeles County Flood Control District

1-6 BIDDING AND SUBMISSION OF THE BID

1-6.1 General

[Add the following:].

Proposal shall be made and submitted on proposal forms P-1 through P-11 in accordance with the Notice Inviting Bids. In addition to the required signatures in the spaces provided in the proposal forms, each BIDDER shall initial each sheet of the proposal forms at the bottom right hand corner.

No person, firm, partnership, corporation, or combination thereof shall be allowed to make or file or be interested in more than one bid for the same work, unless alternate bids are called for. A person, firm, partnership, corporation, or combination thereof who has submitted a sub-proposal to a BIDDER or who has quoted prices on materials to a BIDDER is not thereby disqualified from submitting a sub-proposal to or quoting prices to the other bidders. If, on the opening of bids, more than one bid appears in which the same person, firm, partnership, corporation or combination thereof is interested as a principal, all such bids shall be rejected.

Proposals with interlineations, alterations, or erasures shall be initialed by the BIDDER'S authorized agent. Alternative proposals, special conditions, or other limitations or provisions affecting the bid, except as such called for in the contract documents, will render the bid informal and may cause its rejection.

All proposals must give the prices bid for the various items of work and must be signed by the BIDDER, who shall give his address. Each bid shall have thereon the affidavit of the BIDDER that such bid is genuine and not sham nor collusive, nor made in the interest nor behalf of any other person not therein named and that the BIDDER has not directly nor indirectly induced or solicited any other BIDDER to put in a sham bid, nor induced nor solicited any person, firm, partnership, corporation, or combination thereof to refrain from bidding, and that the BIDDER has not in any manner sought by collusion to secure himself an advantage over any other BIDDER.

A contractor or subcontractor shall not be qualified to bid on, be listed in a bid proposal, subject to the requirements of Section 4104 of the Public Contract Code, or engage in the performance of any contract for public work, as defined in this chapter, unless currently registered and qualified to perform public work pursuant to Section 1725.5 of the Labor Code. It is not a violation of this section for an unregistered contractor to submit a bid that is authorized by Section 7029.1 of the Business and Professions Code or by Section 10164 or 20103.5 of the Public Contract Code, provided the contractor is registered to perform public work pursuant to Section 1725.5 at the time the contract is awarded.

1-6.1.1 Request for Interpretation

If any person contemplating submitting a bid is in doubt as to the meaning of any part of the Plans, Specification, or other proposed Contract Documents, or finds discrepancies in, or omissions from the drawings or specifications, (It, he, she) may make a request to the

ENGINEER, in writing via PlanetBids, for an interpretation or correction thereof pursuant to the provisions in the Information for Bidders section of these specifications. The person submitting such a request shall be responsible for its prompt delivery. All such interpretations of the Contract Documents will be made only by addenda duly issued, and a copy of each such addendum will be uploaded on PlanetBids. The CITY will not be responsible for any other explanations or interpretations of the Contract Documents.

1-6.1.2 Soil Conditions

The BIDDER shall inspect the soil conditions before submitting a bid. By submitting a bid, the BIDDER acknowledges that he is satisfied with the quality of the work area including but not restricted to the conditions affecting, handling and storage of materials, disposal of excess materials, and the soil conditions.

1-6.1.3 Return of Bid Security

Any BIDDER may withdraw its bid, either personally, or by telegraphic or written request, at any time prior to the scheduled closing time for the receipt of bids. It is the sole responsibility of the BIDDER to see that any such telegraphic or written request is delivered to the City Clerk prior to said closing time. Bid security of such BIDDERS will be returned promptly to the BIDDER.

The bid security of the BIDDER whose bid is accepted will be held by the CITY until the contract has been executed and the accompanying insurance certificates, performance bond and labor and materials bond are approved and filed, whereupon the bid security will then be returned to the BIDDER.

The bid security of the second and third lowest BIDDERS will be retained until the contract is awarded to and executed by the BIDDER whose bid is accepted, or until 60 days after the opening of bids, whichever period is shorter. The bid security of all BIDDERS other than the three lowest will be returned promptly after the opening of bids.

If a BIDDER fails or refuses promptly to execute the agreement to do the work or fails or refuses to comply with insurance and bonding requirements, the bid security shall be forfeited to the CITY and shall be collected and paid into the General Fund of the CITY.

1-6.2 Subcontractor Listing

[Add the following:].

The ENGINEER, as duly authorized officer, may consent to subcontractor substitution requested by the Contractor subject to the limitations and notices prescribed in Section 4107 of the Public Contract Code.

1-7 AWARD AND EXECUTION OF THE CONTRACT

1-7.1 General

[Add the following:].

The award of contract, if awarded, will be to the lowest responsive and responsible bidder

whose proposal complies with all requirements of the Notice Inviting Bids and Section 1-6 of these specifications. The BIDDER, upon notification as the "apparent low bidder," shall comply with the CITY'S insurance and bonding requirements by submitting the required insurance certificates and bonds within **fourteen (14) calendar days** after the mailing of a Notice of Award to the BIDDER that the Contract Agreement is ready for execution. The Contract Agreement will be executed by the BOARD within thirty (30) days of receipt of the required number of signed Contract Agreements, properly approved insurance certificates and bonds pursuant to CITY requirements as defined within these specifications. BIDDER must take particular note of "insurance requirements" contained in these specifications and sample agreement included within the Contract Documents, and should provide the required insurance information to his/hers/its insurance broker in order that a properly executed certificate is submitted. The CITY, however, reserves the right to reject any or all bids and to waive any informality in the bids received.

1-7.1.1 Execution of Agreement

The Agreement shall be signed by the successful BIDDER and returned to the CITY no later than **fourteen (14) calendar days from Notice of Award** of the Contract by the CITY. Failure to comply with insurance and bonding requirements as specified in the Agreement and in Section 1-7.1 of these General Provisions shall be considered grounds for the revocation and rejection of the bid and forfeiture of bid security. No proposal shall be considered binding upon the CITY until the execution of the agreement by the CITY. In case of conflict, the agreement shall have precedence over all other written specifications.

1-7.2 Contract Bonds

[Add the following:].

The "Faithful Performance Bond" and the "Labor and Material Bond" as specified in this section shall be for one hundred percent (100%) of the Contract price. The Labor and Material Bond shall be maintained by the CONTRACTOR in full force and effect for at least seven (7) months following the filing of the Notice of Completion. The Faithful Performance Bond shall also be kept by the CONTRACTOR in full force and effect for at least one (1) year following the filing of the Notice of Completion.

CONTRACTOR shall provide the following:

A certified copy of the certificate of authority of the surety issued by the Insurance Commissioner.

A certificate from the clerk of the county in which the court or officer is located that the certificate of authority of the surety has not been surrendered, revoked, canceled, annulled, or suspended or, in the event that it has, that renewed authority has been granted.

Copies of the surety's most recent annual statement and quarterly statement filed with the Department of Insurance pursuant to Article 10 (commencing with Section 900) of Chapter 1 of Part 2 of Division 1 of the Insurance Code.

SECTION 2 - SCOPE OF THE WORK

2-1 WORK TO BE DONE

[Replace in its entirety with the following:].

The Scope of Work includes, but is not limited to, the parking lot improvements, slurry seal, pavement removal and replacement, striping, excavation, backfill, compaction, concrete flatwork, ADA curb ramps, curb, curb and gutter, electrical runs to the pull boxes for the storage building, all grading, retaining walls, fencing, lighting, irrigation, and landscaping, the rough and precise grading, foundation, construction and installation of one new storage building, all electrical and mechanical work within the building, finish grading, flat work, and all other work as depicted within the Plans and as described within the Specifications associated with the Project.

The CONTRACTOR shall furnish all labor, materials, tools, equipment and incidentals necessary to perform and complete the Work as shown on the Plans and these Contract Documents, and to the satisfaction of the ENGINEER.

The CONTRACTOR shall fully cooperate with all CITY agencies and other Contactors under contract to the CITY and assigned to this Project.

The CONTRACTOR is responsible to familiarize themselves with the existing utilities and electronic systems inside and outside the Jack Hammett Sports Complex to facilitate their work on this Project in accordance with the Contract Documents. The following documents are incorporated herein and will be available as separate pdf files electronically, at no cost, via PlaneBids.com (a third-party website) at:
https://www.planetbids.com/portal/portal.cfm?CompanyID=45476.
The list of these existing documents is also provided in Appendix D.

1. Zoning Approval Letter, by City of Costa Mesa, June 20, 2019.
2. Soccer Complex Plans, by David Evans and Associates, 1998.
3. Costa Mesa Farm Sports Complex Soccer Field Lighting, by Dream Engineering 2006.
4. Costa Mesa Farms Sports Complex Soccer Field (#5 and #6) Lighting, City Project No. 10-06, by Design West Engineering, 2010.

5. Farms Sports Complex Utility Plan (Partial) Existing Conditions and New Conduits Layout, 2007.
6. Foundation Soils Investigation for Proposed Soccer Complex, by RAS, 1998.
7. Geotechnical Investigation, Costa Mesa High School Athletic Facility Improvements, by MTGL, 2014.
8. Percolation Testing and Parking Pavement Design, Jack Hammett Sports Complex and Bark Park, by Willdan Geotechnical, 2016.
9. Updated Geotechnical Report, Jack Hammett by Willdan 2019

2-2 PERMITS

[Add the following:].

All permits and licenses shall be obtained in sufficient time to prevent delays to the work.

In the event that the CITY has obtained permits, licenses or other authorizations applicable to the Work, the CONTRACTOR shall comply with the provisions of said permits, licenses and other authorizations.

- The CONTRACTOR shall obtain a no fee Building Permit and other City permits.

2-4 COOPERATION AND COLLATERAL WORK

[Add the following:].

2-4.1 Hours of operation.

All construction work within the residential areas and within the Project limits shall be performed Monday through Friday, except City observed holidays, unless otherwise approved by the ENGINEER. The CONTRACTOR shall be allowed to work from **7:00 a.m. to 3:30 p.m**. on residential areas and within the Project limits, and from **8:30 a.m. to 3:30 p.m.** on arterial and collector streets.

The CONTRACTOR's activities that generate noise audible from the off-site shall be confined to the hours between 7:00 A.M. to 3:30 P.M., Monday through Thursday, 7:00 A.M. to 2:00 P.M. Friday, and from 9:00 A.M. to 2:00 P.M. Saturday, excluding holidays. Deviation from these hours will not be permitted without the prior consent of the ENGINEER, except in emergencies involving immediate hazard to persons or property and for activities that will not generate noise audible from the off-site such as painting or other quite interior work. In the event of either a requested or emergency deviation, inspection service fees will be charged against the CONTRACTOR. The service fees will be calculated at overtime rates including benefits, overhead, and travel time. The service fees will be deducted from any amounts due the CONTRACTOR.

2-5 THE CONTRACTOR'S EQUIPMENT AND FACILITIES

2-5.1 General

[Add the following:].

The CONTRACTOR shall only use the proper construction equipment to protect the City streets from breaking up and deterioration. Haul trucks shall be limited to a gross vehicle weight of 10 tons or less.

2-5.2 Temporary Utility Services
[Add the following:].

The CONTRACTOR shall provide for his employees an adequate supply of clean, potable drinking water, which shall be dispensed through approved sanitary facilities.

If water is needed during construction, CONTRACTOR shall contact Mesa Consolidated Water District or the Irvine Ranch Water District to obtain necessary permits, instructions, and meters prior to commencing work. The CONTRACTOR is required to make any and all necessary installations and connections. All water shall be metered. The CONTRACTOR shall pay for all deposits and fees involved.

2-5.4 Haul Routes
[Add the following:].

In order to protect the City streets from deterioration due to hauling of materials, the CONTRACTOR shall submit to the ENGINEER (at the pre-construction meeting) for approval, a proposed route for the hauling of materials for disposal. Upon approval, the CONTRACTOR shall strictly adhere to that route only, unless written permission from the ENGINEER is obtained to change the route.

Waste Hauler Requirements

The California Green Building Standards Code, 2016 Edition, California Code of Regulations, Title 24, Part 11, impacting waste diversion as documented in the City of Costa Mesa's Municipal Code Title 8, Chapter 4, requires that all construction and demolition related projects divert 65% of project waste generated from the landfill. Consequently, permitted building projects relating to construction and demolition, newly constructed buildings, additions, alterations, interior and exterior demolitions, etc., are required to divert a minimum of 65% of nonhazardous construction and demolition waste from the landfill by recycling, reuse, or salvage. Generally, these materials include brick, drywall, other masonry, cardboard, green waste, paper, carpet, lumber, plastic, concrete, and/or metals. Asphalt, concrete, excavated soil and land-clearing debris should be 100% diverted from disposal. The County provides a suggested list of locations that are meeting and/or exceeding the 65% diversion requirement and may be used for recycling construction and demolition material.

The City of Costa Mesa requires that all hauling activity in Costa Mesa comply with one of the waste hauling options for your construction and demolition related project:

- Use Franchise Waste Hauler
- Self-Haul Permit - https://www.costamesaca.gov/city-hall/city-departments/public-services/waste-collection-and-recycling

A Construction and Demolition Reporting Form as provided in the Miscellaneous Document Section of these Specifications must be completed and submitted by the CONTRACTOR to the CITY prior to the release of retention monies.

2-7 CHANGES INITATED BY THE AGENCY

2-7.1 General

[Add the following:].

ENGINEER shall be the duly authorized officer of the CITY who may grant the changes prescribed in this section.

2-8 EXTRA WORK

[Add the following:].

The extra work as defined in this section of the Standard Specifications and any work done by the CONTRACTOR beyond the lines and grades shown on the plans shall only be performed when ordered in writing by the ENGINEER. In absence of such written order, any such work by the CONTRACTOR shall be considered unauthorized and will not be paid. Work so done may be ordered to be removed at the CONTRACTOR's expense.

2-9 CHANGED CONDITIONS

[Add the following:].

The CONTRACTOR shall promptly act to supply all information to the ENGINEER for proper evaluation. Failure to do so shall constitute a waiver of any payment for delays suffered by the CONTRACTOR.

SECTION 3 - CONTROL OF THE WORK

3-1 ASSIGNMENT

[Replace the 1st sentence with the following:].

No contract or portion thereof may be assigned without written consent of the BOARD.

3-4 AUTHORITY OF THE BOARD AND THE ENGINEER

[Add the following:].

When any of the various units or operations of the work have been suspended, the CONTRACTOR shall give at least 24 hours advance notice of the time when he or his subcontractor will start or resume any of such units or operations. That notice is to be given during working hours, exclusive of Saturdays, Sundays or holidays, for the purpose of permitting the ENGINEER to make necessary assignments to his representative on the work.

Any work performed in conflict with said notice, without the presence or approval of the ENGINEER, or work covered up without notice, approval or consent may be rejected or ordered to be uncovered for examination at CONTRACTOR's expense and shall be removed at CONTRACTOR's expense, if so ordered by the ENGINEER or his representative on the

work. Any unauthorized or defective work, defective material or workmanship or any unfaithful or imperfect work that may be discovered before the final payment and final acceptance of work shall be corrected immediately by the CONTRACTOR without extra charge even though it may have been overlooked in previous inspections and estimates or may have been caused due to failure to inspect the work.

All authorized alterations affecting the requirements and information given on the approved plans shall be in writing. No changes shall be made on any plan or drawing by the CONTRACTOR after the same has been approved by the ENGINEER, except by direction of the ENGINEER in writing. Deviations from the approved plans, as may be required by critical conditions of construction, must be authorized in writing by the ENGINEER.
All instructions, rulings and decisions of the ENGINEER shall be in writing and are binding on all parties unless a formal protest is made as provided in the following paragraph:

If the CONTRACTOR considers any work demanded of him to be outside the requirements of the contract, or if he considers any instruction, ruling or decision of the ENGINEER or ENGINEER'S representative to be unfair, the CONTRACTOR shall, within ten (10) days after any such demand is made, or instruction, ruling or decision is given, file a written protest with the ENGINEER, stating clearly and in detail his objections and reasons therefor. Except for such protests and objections as are made of record, in the manner and within the time above stated, the CONTRACTOR shall be deemed to have waived and does hereby waive all claims for extra work, damages and extensions of time on account of demands, instructions, rulings and decisions of the ENGINEER.

Upon receipt of any such protest from the CONTRACTOR, the ENGINEER shall review the demand, instruction, ruling or decision objected to and shall promptly advise the CONTRACTOR, in writing, of his final decision, which shall be binding on all parties, unless within the ten (10) days thereafter the CONTRACTOR shall file with the BOARD a formal protest against said decision of the ENGINEER. The BOARD shall consider and render a final decision on any such protest within thirty (30) days of receipt of same. If the BOARD fails to consider and render a final decision on any such protest within thirty (30) days of receipt of the same, the protest shall be deemed denied.

3-5 INSPECTION

[Add the following:].

If the CONTRACTOR requests and receives approval from the ENGINEER to receive inspection services from the CITY outside of a normal eight (8) hour day/forty (40) hour work week or on Saturday, Sunday, or CITY holidays, the CONTRACTOR shall arrange with the CITY and ENGINEER for the special inspection services and CONTRACTOR shall pay for such special inspection services at a fee established by the ENGINEER to defray the cost for such service.

All work, which has been inspected and deemed defective in its construction or does not meet all of the requirements of the plans and/or specifications by the ENGINEER shall be remedied, or removed and replaced by the CONTRACTOR in an acceptable manner, and no compensation will be allowed for such correction.

Any work done beyond the limits of the lines and grades shown on the plans or established by the ENGINEER or extra work done without written authority will be considered as unauthorized and not be paid.

Upon failure on the part of the CONTRACTOR to comply with any order of the ENGINEER made under the provisions of this article, the ENGINEER shall have authority to cause defective work to be remedied, or removed and replaced, and unauthorized work to be removed, and to deduct the costs and thereof from any monies due or to come due the CONTRACTOR.

Payment will not be made for materials wasted or disposed of in a manner not called for under the Contract. This includes rejected material not unloaded from vehicles, material rejected after is has been placed and material placed outside the limits of the project. No compensation will be allowed for disposing of rejected or excess material.

3-6 THE CONTRACTOR'S REPRESENTATIVE

[Add the following:].

CONTRACTOR shall file with the ENGINEER the addresses and telephone numbers where its designated representative may be reached during hours when the work is not in progress.

Instructions and information given by the ENGINEER to the CONTRACTOR's authorized representative or at the address or telephone numbers filed in accordance with this section shall be considered as having been given to the CONTRACTOR.

The CONTRACTOR shall have on the work site at all times a competent English-speaking superintendent, as his agent, capable of reading and thoroughly understanding the plans and specifications and other related documents.

3-7 CONTRACT DOCUMENTS

3-7.1 General

[Add the following:].

CONTRACTOR will obtain from the ENGINEER, free of charge, copies of plans, general provisions, special provisions and additions to the Standard Specifications that are reasonably necessary for the execution of work.

CONTRACTOR shall, at its own expense, obtain copies of the Standard Specifications and Standard Plans and Specifications of CALTRANS, for his general use.

If after the Contract is awarded it appears that the work to be done, or any matter relative thereto, is not sufficiently detailed or explained in the specifications and plans, the CONTRACTOR shall apply to the ENGINEER for such further explanations as may be necessary and shall conform to such explanation or interpretation as part of the Contract.

All scaled dimensions are approximate. Before proceeding with the work, the CONTRACTOR shall carefully check and verify all dimensions and quantities and shall immediately inform the

ENGINEER or his representative of any discrepancies.

3-8 SUBMITTALS

3-8.1 General

[Add the following:].

Within 10 working days after the date the BOARD'S award of contract, the CONTRACTOR shall identify submittals which will be required by each section of the specifications and determine the date on which each submittal will be made. Submittal schedule shall be in matrix log form. Submittals shall be consecutively numbered and shall include the specification section number to which they pertain. CONTRACTOR shall be responsible for on time delivery and processing of submittals so as not to impede progress of work. The CONTRACTOR shall submit all Submittals to the ENGINEER. The Notice to Proceed will not be issued until all required submittals are approved with "no exception taken" or "Supply as Noted" by the Agency.

3-10 SURVEYING

[Replace with the following:].

3-10.1 General

The CONTRACTOR will perform and be responsible for the accuracy of setting all required survey stakes adequate for the construction of the project.

3-10.3 Line and Grade

Unless otherwise provided in the Special Provisions, lines and grades for construction shall be the responsibility of the CONTRACTOR, with the following provisions:

All work under this Contract shall be built in accordance with the lines and grades shown on the plans. Field survey for establishing the lines and grades and for the control of construction shall be the responsibility of the CONTRACTOR. All such surveys, including construction staking, shall be under the supervision of a California-licensed land surveyor or by a California-licensed civil engineer allowed by law. Staking shall be performed on all items ordinarily requiring grade and alignment, at intervals normally accepted by the agencies and the trade involved.

The CONTRACTOR shall provide a copy of the office calculations and grade sheets to the City Inspector. The CONTRACTOR shall be responsible for any error in the finished work and shall notify the ENGINEER within one (1) working day of any discrepancies or design errors discovered during staking.

The payment for surveying shall be included in the **LUMP SUM (LS) price** for **Construction Survey and Monument Preservation** and shall include: setting up the survey controls, construction staking, professional services, office calculations, providing the cut and fill sheets to the Inspector, all re-staking required, monument preservation with required corner records for monuments replaced, and furnishing all labor, materials, equipment, tools and

incidentals, and for doing all work involved for **Construction Survey and Monument Preservation**, and no additional compensation will be allowed.

3-12 WORK SITE MAINTENANCE

3-12.1 General

[Replace 2nd paragraph with the following:].

Unless the construction dictates otherwise, and unless otherwise approved by the ENGINEER, CONTRACTOR shall furnish and operate a self-loading motor dustless sweeper with a functional water spray nozzle system at least once each working day to keep paved areas in the Work zone and along all haul routes acceptably clean whenever construction, including restoration, is incomplete.

3-12.2 Air Pollution Control

[Add the following:].

Failure of the CONTRACTOR to comply with the ENGINEER'S dust control orders may result in an order to suspend work until the condition is corrected and, after giving notice to the CONTRACTOR, the ENGINEER may order the condition corrected by others. All costs thus incurred shall be deducted from the amount to be paid to CONTRACTOR. No additional compensation will be allowed as a result of such suspension.

No separate payment will be made for any work performed nor material used to control dust resulting from CONTRACTOR's performance of the work or from public traffic, either inside or outside the right-of-way. Full compensation for such dust control will be considered to be included in the prices paid for the various items of Work involved.

3-12.4.1 General

[Add the following:].

All surplus materials shall be removed from the site of the Work within five (5) days after completion of the Work causing the surplus materials.

3-12.6 Water Pollution Control

3-12.6.1 General

[Add the following:].

Discharge of storm water from construction sites that disturb land equal to or greater than one (1) acre must be in compliance with the state General Construction Activity Permit (Construction Permit). The latest permit provisions of the Construction Permit shall apply. The CONTRACTOR is required to contact the Santa Ana Regional Water Quality Control Board (Regional Board) for all information contained in the Construction Permit. In the event project construction occurs during the transition of revised Construction Permits, the CONTRACTOR shall incorporate the necessary modifications specified by the revised Construction Permit within the time period specified in the new Construction Permit.

Project Soil Disturbance is: **less than 1 acre** (No General Construction Permit required or SWPPP)

Construction activity subject to the Construction Permit includes clearing, grading, disturbance to the ground such as stockpiling, work area, or excavation that results in soil disturbances of at least one acre of total land area. Construction activity that results in soil disturbances of less than one acre is subject to the Construction Permit if the construction activity is a part of a larger common plan of development that encompasses one or more acres of soil disturbance or if it is determined that discharges from the project pose a significant threat to water quality.

The CONTRACTOR shall have an account with the State for SMARTS (Storm Water Multiple Application and Report Tracking System). The CONTRACTOR shall contact the CITY with their user ID so that the CITY will grant the CONTRACTOR access as a Data Submitter.

The CONTRACTOR shall complete the NOI within SMARTS https://smarts.waterboards.ca.gov/smarts/faces/SwSmartsLogin.jsp The CONTRACTOR will notify the CITY when the NOI is ready for the CITY to submit to the State. The CONTRACTOR shall pay all fees associated with the NOI process. The CONTRACTOR shall also complete all required reports within SMARTS as required by the General Permit and the Project's Storm Water Pollution Prevention Plan (SWPPP).

The CONTRACTOR shall complete the Annual Report and NOT within SMARTS. Once the CITY has been notified, the CITY will review and submit to the State for processing.
A copy of the latest permit is available at:

http://www.waterboards.ca.gov/water_issues/programs/stormwater/constpermits.shtml

The CONTRACTOR is hereby directed to read the Construction Permit thoroughly and comply with the requirements as specified therein.

3-12.6.2 Best Management Practices (BMPs)
[Add the following:].

The CONTRACTOR shall install and maintain the appropriate Best Management Practices (BMPs) to protect water quality within the project limits through the duration of the Project.

The CONTRACTOR shall be responsible for any damage to any portion of the Work occasioned by failure to provide proper drainage control prior to the completion and acceptance of the Work.

Payment for furnishing, installing and maintaining BMPs inclusive of sweeping the Project site as required or directed by the ENGINEER shall be included in the other various bid items associated with the work and no additional payment will be allowed thereof.

3-12.6.3 Storm Water Pollution Prevention Plan (SWPPP)
[Add the following:].

If a General Construction Permit is required pursuant to Section 3-12.6.1 of these General Provisions, the following Storm Water Pollution Prevention Plan (SWPPP) requirements shall be adhered to:

The CONTRACTOR is responsible for the preparation and implementation of a SWPPP as required by the Construction Permit. The CONTRACTOR is responsible for completing all parts of the SWPPP including, REAPs, monitoring, sampling, rain gauge records, weather reports, submitting pictures of every third storm, non-authorized discharge reports, Ad-Hoc reports, Annual Reports, post construction BMPs and other requirements of the SWPPP.

The completed SWPPP must be signed by a QSD (Qualified SWPPP Developer). The completed SWPPP must be submitted to the resident engineer for City review and acceptance, prior to uploading to SMARTS. The CONTRACTOR will be responsible for uploading an electronic format of the SWPPP into SMARTS. The SWPPP must be signed by the City before construction begins. A copy of the SWPPP must be available at the site at all times and must be implemented and revised in accordance with the Construction Permit throughout the duration of the project.

CONTRACTOR must have QSP (Qualified SWPPP Practitioner). CONTRACTOR shall perform site inspections before and after the storm event, and once each 24-hour period during extended storm event, to identify BMP effectiveness and implement repairs or BMP modifications as soon as possible. Sampling of potential pollutant discharges shall be conducted by trained personnel and required laboratory test conducted by laboratory accredited by the California Department of Health Services Environmental Laboratory Accreditation Program.

CONTRACTOR shall be responsible for any penalties assessed against the City if the penalty assessed is due to CONTRACTOR's violation of the Construction Permit requirement, or CONTRACTOR's failure to fully implement and monitor SWPPP as required.

Erosion and Sediment Control Plans

Erosion and Sediment Control Plans shall be prepared by the CONTRACTOR as part of the SWPPP that identify adequate controls to prevent erosion and discharge of sediment off-site. Payment for the Erosion and Sediment Control Plans shall be included as part of the SWPPP.

3-12.6.4 Dewatering

[Add the following:].

Unless otherwise directed in these Special Provisions, the CONTRACTOR shall provide and maintain ample means and devices with which to promptly remove and properly dispose of water entering the excavations or other parts of the work at all times during construction. Dewatering shall be accomplished by methods which will ensure a dry excavation and preservation of the final lines and grades of the bottoms of excavations. The methods may include sump pumps, deep wells, well points, suitable rock or gravel placed below the required bedding for draining and pumping purposes, temporary pipelines, and other means.

Standby pumping equipment shall be on the job site. A minimum of one standby unit shall be available for immediate installation should any well unit fail. The design and installation of well points or deep wells shall be suitable for the accomplishment of the work. Drawings or details indicating the proposed dewatering system shall be submitted to the CITY for review.

The CONTRACTOR shall dispose of the water from the work in a suitable manner without damage to adjacent property.

Conveyance of the water shall be such as to not interfere with traffic flow or treatment facilities operations. No water shall be drained into work built or under construction without prior consent of the ENGINEER.

Water shall be disposed of in such a manner as not to be a menace to the public health and such disposal shall be performed in accordance with Environmental Protection Agency and State Water Quality Control Board standards (NPDES permit). Any testing and reports required under NPDES permit shall be performed by the CONTRACTOR and submitted to the appropriate agency for approval at no additional cost to the CITY.

3-13.3 Warranty

[Replace 2nd sentence of 1st paragraph with the following:].

The warranty period shall start on the date the Work is accepted by the Board.

SECTION 4 - CONTROL OF MATERIALS

4-4 TESTING

[Add the following:].

All tests of materials furnished by the CONTRACTOR shall be made in accordance with commonly recognized standards of national organizations and such special methods and tests as are prescribed in these specifications. No materials shall be used until they have been approved by the ENGINEER.

The CONTRACTOR shall at his expense furnish the CITY, in triplicate, certified copies of all required factory and mill test reports. Any materials shipped by the CONTRACTOR from a factory or mill prior to having satisfactorily passed such testing and inspection by a representative of the CITY shall not be incorporated in the work, unless the ENGINEER shall have notified the CONTRACTOR, in writing, that such testing and inspection will not be required.

At the option of the ENGINEER, the source of supply of each of the materials shall be approved by the ENGINEER before delivery is started and before such material is used in the work.

Unless otherwise provided in the Special Provisions, the CITY will complete and pay for the initial soils, compaction, and material tests. Any subsequent soil, compaction, and material tests deemed necessary due to the failure of initial tests will be at the CONTRACTOR's

expense and deducted from the payment due. The Contractor shall perform its own Quality Assurance / Quality Control (QA/QC) on the material testing to assure conformance with the Contract Documents.

SECTION 5 - LEGAL RELATIONS AND RESPONSIBILITIES

5-1 LAWS AND REGULATIONS

[Add the following:].

The CONTRACTOR shall protect and indemnify the CITY, the BOARD, the ENGINEER, and all of its or their officers, agents and servants against any claim or liability arising from or based on the violation of any existing or future State, Federal and local laws, ordinances, regulations, orders or decrees, whether by himself or his employees. If any discrepancy or inconsistency is discovered in the plans, drawings, specifications or contract for the work in relation to any such law, ordinance, regulation, order or decree, the CONTRACTOR shall forthwith report the same to the ENGINEER in writing.

5-2 SPECIAL NOTICES

[Add the following:].

In addition to the special notices requirement to be served by Personnel Delivery or Certified Mail, special notices may also be served by the utilization of FedEx or UPS express service with a confirmed delivery receipt. Service shell be effective on the date of the receipt of the delivery confirm issued by FedEx or UPS.

5-3 LABOR

5-3.3 Payroll Records

[Add the following:].

In order to verify compliance with the Labor Code, CONTRACTOR shall furnish to the ENGINEER, weekly, for the duration of the contract period, copies of his payroll statements showing wages paid to each employee during the preceding week and the employee work classification. Use of Form DH-C-347, Payroll Statement of Compliance, is an acceptable method of fulfilling the above requirement.

5-3.5 Apprentices

[Replace with the following:].

Attention is directed to the provisions of Sections 1777.5 and 1777.6 of the Labor Code concerning the employment of apprentices by the CONTRACTOR or any subcontractor under it. The CONTRACTOR and any subcontractor under it shall comply with the requirements of those Sections in the employment of apprentices.

Information relative to apprenticeship standards, wage schedules and other requirements may be obtained from the Director of Industrial Relations, Ex-officio the Administrator of Apprenticeship, San Francisco, California, or from the Division of Apprenticeship Standards and its branch offices.

5-4 INSURANCE

[Replace with the following:].

The minimum amounts and types of insurance coverages are as stated in the Agreement (sample copy attached). Prior to bid submittal the BIDDER shall keep fully informed of the latest insurance requirements of the City of Costa Mesa and shall comply with all other provisions of Section 5-4 of the Standard Specifications.

Below are approved endorsements which satisfy the basic insurance requirements contained in contracts entered into by City of Costa Mesa. These have been approved by the City Attorney's office. The terms of any specific contract with the City are controlling. Prior to the commencement of any work, the CITY requires that the ENGINEER receive Certificates of Insurance in **DUPLICATE** for liability coverage of at least $1,000,000 combined single limit, per occurrence and in the aggregate.

Each insurance policy required by the CITY of the CONTRACTOR shall contain the following endorsements:

1. Additional Insureds

"The City of Costa Mesa and its elected and appointed boards, officers, agents, and employees are additional insureds with respect to the subject project and agreement."

2. Notice

"Said policy shall not terminate, nor shall it be canceled nor the coverage reduced, until thirty (30) days after written notice is given to City."

3. Other Insurance

"Any other insurance maintained by the City of Costa Mesa shall be excess and not contributing with the insurance provided by this policy."

If any of such policies provide for a deductible or self-insured retention to provide such coverage, the amount of such deductible or self-insured retention shall be approved in advance by City. No policy of insurance issued as to which the City is an additional insured shall contain a provision which requires that no insured except the named insured can satisfy any such deductible or self-insured retention.

5-7 SAFETY

5-7.1 Work Site Safety

5-7.1.1 General

[Add the following:].

Material or other obstructions shall not be placed within fifteen feet (15') of fire hydrants. Fire hydrants shall be made readily accessible to the Fire Department at all times.

5-7.8 Steel Plate Covers

5-7.8.1 General

[Add the following:].

All steel plate covers utilized for the project must be slide resistant. A non-slip coating will be required on the side of the steel plate that that will be utilized for the driving or walking surface.

SECTION 6 - PROSECUTION AND PROGRESS OF THE WORK

6-1 CONSTRUCTION SCHEDULE AND COMMENCEMENT OF THE WORK

6-1.1 Construction Schedule

[Replace the 1st Paragraph with the following:].

The CONTRACTOR's proposed Construction Work Schedule shall be submitted to the ENGINEER for approval within ten (10) working days after the date of the BOARD's execution of the Contract Agreement. The proposed Construction Work Schedule shall depict the main milestones, sub-activities links, durations, start and finish dates, and predecessors/successors, with chronological relationships of all the activities, and other relevant fields needed to demonstrate the overall delivery schedule within the Contract Work Days as defined within these Specifications and be submitted in MS Project File and pdf formats, or an equal scheduling software as approved by the ENGINEER. The Construction Work Schedule shall be supported by written statements from each supplier of materials or equipment indicating that all orders have been placed and acknowledged, and setting forth the dates that each item will be delivered. The schedule shall also incorporate the requirements of Section 402-5 of the Standard Specifications to complete the Work within the Contract Days. Prior to issuing the Notice to Proceed, the ENGINEER will schedule a preconstruction meeting with the CONTRACTOR to review the proposed Construction Work Schedule, delivery dates, activity milestone dates, arrange utility coordination, discuss construction methods and staging, and clarify inspection procedures.

Additionally, the proposed Construction Work Schedule shall include an inclement weather contingency activity, called **"Inclement Weather Days Allowance".** The duration for this activity shall be **Twenty (20) calendar days**, included in the total Contract Days, and it shall be the last activity in the schedule before the Final Completion millstone, with no activities scheduled concurrently with it. Each time that rain, windstorm, high water or other natural phenomenon occurring within the specific locality of the work, prevents work for more than fifty percent (50%) of the schedule workday activities that are on the current critical path as determined by the ENGINEER, that day shall be counted as an **"Inclement Weather Day**", and the following procedure shall be followed:

a) One (1) day of duration shall be deducted from the "Inclement Weather Days Allowance" activity.

b) A one (1) day activity shall be added to the current schedule update, named "Inclement Weather, mm/dd/yy", and this activity shall be assigned successors of the specific activity that were impacted.

No allowance for the weather-related Contract time extensions will be considered until after the entire duration of the "Inclement Weather Days" is exhausted. Once this weather day contingency duration is exhausted, a Contract time extension will be considered when inclement weather prevents work on critical path activities for more than fifty percent (50%) of the scheduled workday as determined by the ENGINEER. Upon experiencing critical path schedule impacts due to inclement weather, the CONTRACTOR shall seek a time extension in accordance with these Specifications.

The CONTRACTOR shall provide a Notice of Change and schedule a *fragmentary scheduling network* (i.e., "fragnet") submittal to the CITY for all tie extension requests due to inclement weather in excess of the Contract Work days as depicted within the Construction Work Schedule. Should the CONTRACTOR fail to provide Notice of Change and/or schedule a fragnet submittal for the weather event within three (3) calendar days of the first inclement weather day that exceeds the "Inclement Weather Day Allowance", then it is mutually agreed that the weather event has no time impact on the Contract completion date and no time extension is required.

Any unused Inclement Weather Days will be considered as Float Days. Float Days can be used by the CONTRACTOR upon written request and approval by the ENGINEER.

The CONTRACTOR shall submit progress reports to the ENGINEER by the tenth day of each month. The report shall include an updated Construction Work Schedule. All revisions shall be completed within three days after review by the ENGINEER. The CONTRACTOR shall submit requests for changes in the schedule to the CITY for approval at least three (3) working days prior to performing any work. Any deviations from the original approved Construction Work Schedule shall be explained and identified in the updated Construction Work Schedule. Progress payments will be withheld pending receipt of any outstanding reports.

The CONTRACTOR shall furnish the ENGINEER with a 3-week look ahead-schedule in a tabular format at every weekly construction meeting. The 3-week look ahead schedule shall utilize the main milestones within the approved Baseline Construction Schedule with updates and include sub-activities.

Payment for the preparation, update, and submittal of the Baseline Construction Schedule, 3-week look ahead schedule, and progress report shall be considered as included in the various item of work and no additional compensation will be allowed thereof.

[Add the following:].

6-1.3 Daily Report Submittal

CONTRACTOR shall submit daily reports to the CITY at the end of each working day. All forms shall be provided by the CITY. Any cost for this item shall be included in the various

items of work and no other compensation will be allowed.

6-3 TIME OF COMPLETION

6-3.1 General

[Replace the 1st Sentence with the following:].

The CONTRACTOR shall begin the Work within **ten (10) Working Days** after the date the Contract is executed by CITY unless a later start date is agreed upon by the CITY and CONTRACTOR within a written Notice-to-Proceed. The Work shall be completed within **ONE- HUNDRED AND TEN (110) Working Days** from the date set in the Notice-to-Proceed or the first day of commencement of Work, whichever occurs first.

6-5 USE OF IMPROVEMENT DURING CONSTRUCTION

[Add the following:].

Should it become necessary, due to developed conditions, to occupy any portion of the Work before Contract is fully completed, such occupancy shall not constitute acceptance by the CITY of work by CONTRACTOR.

6-7 TERMINATION OF THE CONTRACT FOR DEFAULT

6-7.3 Notice of Termination for Default

[Replace the 1st Paragraph with the following:].

The ENGINEER will make the determination if the CONTRACTOR had failed to commence satisfactory corrective action within 5 working days after the receipt of the notice to cure, or to diligently continue satisfactory and timely correction of the default thereafter, and will take action as allowed by the Contract Documents.

6-7.4 Responsibilities of Surety

[Add the following:].

Within 3 working days of receipt of the written notice of termination for default, the Surety shall provide the services needed to maintain the project in accordance with the Contract Documents. The services shall maintain the existing traffic control in place and the maintenance of the project site until the ENGINEER's review and acceptance of the Surety's plan for course of action.

6-9 LIQUIDATED DAMAGES

[Replace the 1ST Paragraph with the following:].

The CONTRACTOR shall pay to the CITY the sum of **$2,300** per calendar day, for each and every calendar day's delay in finishing the Work in excess of the number of Working Days prescribed within these General Provisions and the Agreement, or per the direction of the ENGINEER. Liquidated damages are calculated per Chapter 12 of the latest edition of the Caltrans Local Assistance Procedures Manual (LAPM).

SECTION 7 - MEASUREMENT AND PAYMENT

7-3 PAYMENT

7-3.1 General

[Replace the 1ST Paragraph with the following:].

Payment for the various items listed on the Bid Proposal, as further specified herein, shall constitute full compensation to the CONTRACTOR for furnishing all material, tools, equipment, supplies, and manufactured articles, and for all labor, operations, and incidentals appurtenant to the items of Work and as specified and shown on the drawings, including all costs for compliance with the regulations of public agencies having jurisdiction, including Safety and Health Requirements of the California Division of Industrial Safety and the Occupational Safety and Health Administration (OSHA) of the U.S. Department of Labor. No separate payment will be made for any item that is not specifically set forth in the Bid Proposal. Costs arising from violations of regulations will be paid by the offending party to the extent that there will be no additional cost to the CITY.

When no bid item is provided for work/improvement shown or indicated on the plans and specifications, payment for such work/improvement will be considered to be included in various applicable items of work.

7-3.2 Partial and Final Payment

[Replace the 1st Paragraph in its entirety with the following:].

The closure date for the purpose of making partial progress payments will be the last day of each month. The CONTRACTOR may request, in writing, that such monthly closure date be changed. The ENGINEER may approve such request when it is compatible with the CITY's payment procedure.

[Replace the 2nd Paragraph in its entirety with the following:].

Each month, the CONTRACTOR shall meet with the ENGINEER, a minimum of three (3) working days prior to the submittal of the progress payment to the AGENCY, to finalize and receive approval regarding the measurement of the Work performed through the closure date and the estimated value of the progress payment based on the Contract Unit Prices or as provided for in the Standard Specifications. Any progress payment submitted without such approval will be considered incomplete and returned to the CONTRACTOR and no payment shall be considered until such approval is obtained.

[Replace the 3rd Paragraph in its entirety with the following:].

The amount retained and deducted by the BOARD shall be 5% of the progress estimates for all progress payments. No reduction in the amount of retention will be allowed. However, after 50% of the work has been completed, if the BOARD finds that satisfactory progress is being made, it may make any of the remaining progress payments in full for actual work completed. The final payment of the retention amount to the CONTRACTOR shall be made

thirty-five (35) days after the date of the recording of the Notice of the Completion of the work after it is accepted by the CITY. The 5% withheld from each progress payment shall not include monies withheld for stop notices or other withholding by the CITY. The monies withheld for stop notice and other withholdings shall be in addition to the 5% withheld for retention.

[Add to end of Section the following:].

CONTRACTOR shall comply with the requirements of Division 2, Part 1, Chapter 7, Section 7107 of the California Public Contract Code.

The lead time for processing invoices for the monthly progress payments approved by the ENGINEER for inclusion on the warrant list of the CITY is governed by the rules and regulations established by the Finance Department of the CITY. Monthly payments will be processed and paid in accordance with the rules and regulations established or revised by the said Finance Department.

The CONTRACTOR shall submit all weight tickets or volumes of all materials used in the construction to the ENGINEER for checking and verification prior to any payment. Failure to do so will postpone the payment to the CONTRACTOR, until the matter is resolved satisfactorily.

The weight or volume from submitted tickets must correspond to the work done in the field; if not, the City shall reject the work without compensation to the CONTRACTOR, and/or the CONTRACTOR shall be directed to replace that work at no additional costs to the City.

After completion of the Contract, the BOARD shall, upon recommendation of the ENGINEER, accept the Work as completed and authorize the Final Payment.

The Final Payment shall be the entire sum found to be due the CONTRACTOR after deducting therefrom all previous payments and all amounts to be kept and all amounts to be retained under the provisions of the Contract. All prior partial estimates and payments shall be subject to correction in the final estimate and payment.

No certificate given or payment made under the Contract, except the final certificate or Final Payment, shall be conclusive evidence of full or substantial performance of this Contract; and no payment shall be construed to be an acceptance of any defective work or improper material.

The acceptance of Final Payment by the CONTRACTOR shall release the CITY, the BOARD, and the ENGINEER from any and all claims or liabilities on account of work performed by the CONTRACTOR under the Contract or any alterations thereof.

The CONTRACTOR shall record, on the set of contract documents maintained at the job site, deviations which have been made from the Contract Documents or approved shop drawings – including buried or concealed construction and utility features which are revealed during the course of construction. Special attention shall be given to recording the horizontal and vertical location of all buried utilities that differ from the locations indicated, or which were not

indicated on the Contract Documents. Said record documents shall be supplemented by detailed sketches as necessary or directed, to indicate fully the work as actually constructed.

Requests for partial payments shall not be approved until the record documents are brought up to date. Also, request for final compensation shall not be approved until all the variations between the work as constructed and as originally shown in the Contract Documents have been properly recorded and delivered to the City, after approved by the ENGINEER.

[Add the following:].

7-3.2.1 Prompt Progress Payment to Subcontractors

CONTRACTOR shall comply with the requirements of Division 2, Part 1, Chapter 7, Section 7200 of the California Public Code.

The CONTRACTOR agrees to pay each subcontractor under this Agreement for satisfactory performance of its contract no later than 7 days from the receipt of each payment the CONTRACTOR receives from CITY.

The CONTRACTOR agrees further to release retainage payments to each subcontractor within 7 days after the retention payment is received by the CONTRACTOR.

Any delay or postponement of payment from the above referenced time frame may occur only for good cause following written approval of the CITY. Any violation of this provision shall subject the violating prime contractor or subcontractor to the penalties, sanctions and other remedies specified in Section 7108.5 of the Business and Professions Code. This clause applies to both DBE and non-DBE prime contractors and subcontractors.

City will be strictly monitoring the Contractor for prompt payment to all subcontractors.

[Add the following:].

7-3.2.2 Prompt Pay Monitoring and Enforcement of Progress Payments

The City of Costa Mesa will use the following monitoring and enforcement mechanisms to ensure that all subcontractors, including DBE's, are promptly paid.

A. The City will strictly monitor the prime contractor or subcontractor(s) for prompt release of progress payments for all subcontracted work as follows:

   1. The effective date of release is the date the City releases the check to the prime contractor by mailing or hand delivery at the City of Costa Mesa (has to be requested in writing ahead of time).

   2. Prime contractor or subcontractor(s) to provide verification in writing that the subcontracts have been paid within 7 days or the time period agreed, from the effective date of release.

   3. City may contact subcontractor(s) to confirm receipt of progress payment amount and

if it was received within 7 days or the time period agreed from the effective date of release.

B. If the prime contractor or subcontractor(s) is found to be in default of Federal or State Codes concerning prompt payment to subcontractors, City will enforce the following besides the disciplinary action, sanctions and penalties imposed per the codes:

1. City will withhold 150% of the monies due to the subcontractor(s) from the prime contractor's next progress payment.

2. City may also elect to make the payment(s) directly to the subcontractor(s) without the prime contractor's approval for the remainder of the contract.

7-3.3 Delivered Materials

[Replace in its entirety with the following:].

The cost of materials and equipment delivered, but not incorporated in said work, will not be included in the progress payment estimate unless otherwise provided in these Specifications. All materials shall be nontoxic and shall not contain asbestos and hazardous substances as established by applicable laws.

Materials delivered, but not in place, will not be classed as work done, except as otherwise provided in these Specifications.

7-3.4 Mobilization

[Replace in its entirety with the following:].

Mobilization shall consist of all preparatory work and operations. It shall include, but not be limited to, the movement of personnel, equipment, materials and incidentals to the project site necessary for work on the project. The mobilization shall include all other work and operations, which must be performed.

Mobilization shall also include the time, materials, and labor to move the necessary construction equipment to and from the job site and the project administration costs during the entire contract period.

This work shall include, but not be limited to protect-in-place and/or relocation of the facility to accommodate the construction of an improvement; including resetting curb drains through new curbing.

The CONTRACTOR shall provide supervisory personnel to keep the construction site in a safe condition and all other related work as required at all times. These requirements shall also apply to all non-working days during construction period. The CONTRACTOR is responsible for securing an adequate storage site for equipment and materials.

The CONTRACTOR shall have on the work site at all times, as his agent, a competent English speaking superintendent capable of reading and thoroughly understanding the plans, specifications, and other related documents.

7-3.4.1 Travel Route for Trucking and Equipment

Plans indicating the travel route for the CONTRACTOR's equipment movement in and out of the work site must be submitted concurrently with the Haul Route Plan (Section 2-5.4) to the ENGINEER at the pre-construction meeting for approval prior to commencement of any work. The travel route plans, which meet the City's requirements, will be approved and returned to the CONTRACTOR; otherwise, further revisions are required until they are acceptable to the City. The approved travel plans shall be strictly adhered to by the CONTRACTOR during all phases of the construction.

Any deviation from these requirements is not permitted. All the CONTRACTOR's operations will be ceased at once if the CONTRACTOR violates any of these requirements. No further payments will be made to the CONTRACTOR until problems are resolved according the City's requirements.

7-3.4.2 Construction Sequence/Order of Work

In order to minimize the inconveniences to the residents and businesses, the CONTRACTOR shall construct the Project and sequence the work where no two adjacent streets are closed at one time, and/or the nearest parking is no more than 300' from the intersection of the street being closed to traffic. The CONTRACTOR shall maintain adjacent streets open for ingress and egress and for parking.

7-4 PAYMENT FOR EXTRA WORK

7-4.2 Basis for Establishing Costs.

7-4.2.1 Labor

[Add the following:].

The compensation for employer's payments of payroll taxes; workers compensation insurance; liability insurance; health and welfare; pension; vacation; apprenticeship funds; other direct costs resulting from Federal, State, or local laws; and for assessments or benefits required by lawful collective bargaining agreements to be applied to the actual cost for wages shall be **23 percent** for regular time and overtime.

7-4.3 Markups

7-4.3.1 Work by the Contractor

[Replace in its entirety with the following:].

The allowance for overhead and profit to be added to the CONTRACTOR's costs shall be as follows:

Labor:	20%
Materials:	15%
Contractor Owned Equipment	15%

Equipment Rental	10%*
Other Items and Expenditures	10%

To the sum of the costs and markups provided for in this section, 1 percent shall be added as compensation for bonding.

* Equipment Rental rates shall be based on the latest applicable Caltrans Equipment Rental Rates.

7-4.3.2 Work by a Subcontractor
[Replace in its entirety with the following:].

When all or any part of the extra work is performed by a Subcontractor, the markup established in 7-4.3.1 shall be applied to the Subcontractor's actual cost of such work. A markup of ten (10) percent on the first $5,000 of the subcontracted portion of the extra work and a markup of five (5) percent on work added in excess of $5,000 of the subcontracted portion of the extra work may be added by the CONTRACTOR.

No markups will be allowed for second tier or higher subcontractors.

[Add the following:].

7-6 SUMMARY OF PUBLIC CONTRACT CODE § 9204

The following procedure will apply to any claims by the CONTRACTOR on the City:
A "claim" is a separate demand on the City by a CONTRACTOR on a public works project and sent by registered mail or certified mail with return receipt requested, for one or more of the following:

- A time extension, including relief from penalties for delay
- Payment by the City of money damages under the terms of the contract
- Payment of an amount that is disputed by the City

<u>Initial Review</u>

The claim must be supported by appropriate documentation. The City has 45 days within which to review the claim and provide the CONTRACTOR with a written statement identifying the disputed and undisputed portions of the claim. If the City does not issue a written statement, the claim is deemed rejected in its entirety. The City will pay any undisputed portion of the claim within 60 days of issuing the statement.

<u>Meet & Confer</u>

If the CONTRACTOR disputes the City's written response, or if the City does not issue one, the CONTRACTOR may request in writing an informal conference to meet and confer for possible settlement of the claim. The City will schedule the meet and confer conference within 30 days of this request and provide a written statement identifying the remaining

disputed and undisputed portions of the claim within 10 business days of the meet and confer. The City will pay the undisputed portion within 60 days of issuing this statement.

Mediation

With respect to any disputed portion remaining after the meet and confer, the City and CONTRACTOR will submit the matter to nonbinding mediation, agree to a mediator within 10 business days after issuing the written statement, and share mediation costs equally. If mediation is unsuccessful, then the terms of the public works agreement and applicable law will govern resolution of the dispute.

Miscellaneous Provisions

Amounts not paid by the City in a timely manner bear interest at 7% per annum. Subcontractors may submit claims via this procedure through the general CONTRACTOR. The City and CONTRACTOR may waive the requirement to mediate, but cannot otherwise waive these claim procedures.

SECTION 8 – FACILITIES FOR AGENCY PERSONNEL

8-2 FIELD OFFICE FACILITIES

8-2.1 Class "A" Field Office

[Replace in its entirety with the following:].

8-2.1.1 Construction Management Services Office Space:

A space separate from the CONTRACTOR's office shall be provided by the CONTRACTOR within fifteen calendar days (15) of the Notice to Proceed (NTP) or at the start of the Project, whichever occurs first, and shall remain on the Project site for the duration of the Contract. The CONTRACTOR shall include in their bid, all costs to provide this Construction Management space with appurtenances to serve as an office for their staff (Inspection and Management); include facilities for power, data, and telecommunications.

The Construction Management office space shall be an air-conditioned space of sufficient size, but not less than 175 square feet, to accommodate the following CONTRACTOR provided furnishings: (1)–Business class Color Copier/Scanner/Fax (will require and include a hard wire data connection) for use by City and IOR, (4)-four-drawer desks, (4)-swivel desk chair,(1)-drawing table 48"x96", (4)-drawer file cabinet, (3)-6"x4" dry-erase marker board and a full size book shelf. This space may be shared among City staff and inspection staff. The Office space to be furnished by CONTRACTOR with full size refrigerator, microwave, potable water, and electricity. The temporary sanitation facility as provided by the CONTRACTOR outside the field office shall be used by the CONTRACTOR and City staff. **The Existing Restroom facilities at the Sports Park shall only be open to the public and not used by the CONTRACTOR, unless directed otherwise by the ENGINEER.**

The CONTRACTOR shall have separate facilities for their personnel.

8-2.1.2 Web based file sharing platform:

CONTRACTOR shall provide a fully functional web based file sharing platform/site/software for project administration to be utilized by all parties. Trial subscriptions to web based platforms will not be considered acceptable.

8-2.1.3 Water Supply:

If water is needed during construction, CONTRACTOR shall contact Mesa Consolidated Water District or the Irvine Ranch Water District to obtain necessary permits, instructions, and meters prior to commencing work. The CONTRACTOR is required to make any and all necessary installations and connections. All water shall be metered. The CONTRACTOR shall pay for all deposits and fees involved.

If water is needed during construction for the temporary field office facility, the CONTRACTOR shall coordinate with the City to assess the proper connection.

All cost associated with the preparation and implementation Field Office shall be considered within the Mobilization Bid Item and no other compensation will be allowed.

- SECTION E - SPECIAL PROVISIONS
PART 1-8

PART 1 - GENERAL

[Add the following Section:].

SECTION 100 - GENERAL

100-1 GENERAL

Additions/Modifications to Standard Specifications

The following additions are made to the 2018 edition of the "Standard Specifications for Public Works Construction" ("Green Book"), and the General Provisions stated within the "Standard Specifications" of this Project. Should there be a conflict between any of these provisions; the Special Provisions shall have precedence.

All work shall be performed in conformance with the latest edition of the Uniform Building Code as adopted by the City of Costa Mesa. The electrical, plumbing, and fire codes, and other regulations as adopted by the City of Costa Mesa Building Official shall apply to this project.

Where referenced in these specifications, the latest edition of the "City of Costa Mesa Standard Drawings" and the "Work Area Traffic Control Handbook" (WATCH) published by Building News, Inc., shall also apply.

If the item of work is identified within the Proposal section of these Specifications, then the following bid item descriptions will provide the corresponding bid item numbering within each corresponding section of the Standard Specifications under the Subsection entitled "Measurement and Payment" or "Payment". All other sections and subsections shall conform to the Standard Specifications unless modified herein.

The unit prices and lump sum amounts to be paid for under the bid items listed in the Proposal shall include full compensation for furnishing all labor, materials, tools, equipment and incidentals necessary for the completion of the work and for performing all work contemplated and embraced under the Contract, in accordance with the Plans and Contract Documents. This shall include the CONTRACTOR's costs involved with bonding, insurance, worker's compensation, overhead, financing, obtaining required permits and permit fees, mobilization, traffic control, public convenience and safety, protective barricading/fencing, sanitary facilities, storage of equipment and materials, security against theft and vandalism, project site maintenance, dust and runoff control, clean-up including all costs for compliance with the regulations of public agencies having jurisdiction, including Safety and Health Requirements of the California Division of Industrial Safety and the Occupational Safety and Health Administration (OSHA) of the U. S. Department of Labor, .and all other items related to the work.

Payment for compliance with the following provisions shall be included in the various bid items of work unless otherwise modified in the special provisions section. No additional compensation will be allowed.

No separate payments will be made for any items that are not specifically set forth in the Bid Proposal. Payments for any such items are included in various bid items of work.

Costs arising from violations of regulations will be paid by the offending party to the extent that there will be no additional cost to the City.

Payment for unit price work shall be made for the actual quantities of Contract Items removed, constructed, or disposed of in accordance with the Plans and these Specifications. Measurement of Unit Price work shall be specified in the Standard Specifications, Section 7-1, "Measurement of Quantities for Unit Price Work." Payment for Lump Sum work shall be paid for at the price indicated in the Bid, in accordance with the Standard Specifications, Section 7-2, "Lump Sum Work."

Payment for all work shall be included in the various bid items. No additional compensation shall be made therefore. Work associated with each bid item shall include, but not be limited, to the bid descriptions set forth herein.

100-3 ALLOWANCES PER SPECIAL PROVISIONS

100-3.1 General

The work items as shown in the Bid Schedule entail work beyond the Scope of Work established within the Plans, Specifications, and Standard Specifications as directed by the ENGINEER with a specified Contract allowance.

100-3.2 Measurement and Payment

At the direction of the ENGINEER, the CONTRACTOR shall provide labor, equipment, and materials for the project management beyond the Scope of Work established within the Project Plans and Specifications. Work might include, but not be limited to; delivery of additional newsletters; disposal of materials; additional potholing; furnishing and installation of informational signs; and related work, unforeseen utility conflicts, unsuitable soil conditions and extra sound mitigation measures, and will only be performed if required, and approved by the ENGINEER. The CONTRACTOR acknowledges that the bid items will only be used at the discretion of the ENGINEER. The allowance for these line items are as shown within the Proposal Section of these Specifications.

Measurement and Payment for “Additional Work Items” shall be paid per Force Account (F.A.) for all work performed pursuant to Section 7-4 of these Specifications and shall, include all labor, equipment, materials as required to complete the work as directed by the ENGINEER.

PART 2 – CONSTRUCTION MATERIALS

[Replace entire Subsection with the following:]

TECHNICAL SPECIFICATIONS

CIVIL ..... 41 PAGES
LANDSCAPE ARCHITECTURE..... 76 PAGES
ARCHITECTURAL METHODS AND MATERIALS ..... 74 PAGES
ELECTRICAL ..... 52 PAGES

PART 4 - EXISTING IMPROVEMENTS

SECTION 400 – PROTECTION AND RESTORATION

400-1 GENERAL

[Add the following:].

400-1.1 Removal and Restoration of Existing Improvements

CONTRACTOR shall remove and restore all existing improvements including but not limited to, removing and installing mailboxes, fences, walls, driveways, bricks, pavers, relocation of existing drain pipe, removing tree roots and restoring planters, sprinklers, and landscaping and irrigation system. CONTRACTOR shall restore or replace to a condition equal to or better than existing condition. All replacement and restoration work shall be coordinated with the City and completed to satisfaction of the City.

SECTION 402 – UTILITIES

402-1 LOCATION

402-1.1 General

[Add the following:].

Locations of utilities shown on plans are approximate only and are based on a search of available records.

It shall be the CONTRACTOR'S responsibility alone to determine the location of all underground utilities or substructures of every nature and to protect them from damage.

Attention is directed to the possibility of utility mains or laterals within the project limits. The CONTRACTOR shall have the locations of the various utility facilities within reconstruction areas marked on the surface prior to construction and protect them during the removal and reconstruction procedures. The CONTRACTOR shall contact the City Transportation Services Department to locate traffic signal conduit within the reconstruction areas.

The CONTRACTOR shall prepare a pothole plan for review and acceptance by the ENGINEER prior to commencing pothole activities. Additionally, the CONTRACTOR shall utilize Ground Penetrating Radar (GPR) to locate existing utilities prior to pothole activities and provide said results to the ENGINEER. Prior to commencing any other work, the CONTRACTOR shall carefully excavate and determine precise locations (“pothole”) all utilities pursuant to the approved pothole plan, including service connections, which have been marked by the respective owners and which may affect or be affected by the Work. The CONTRACTOR shall provide pothole records to the ENGINEER 48 hours prior to excavation, which include information of type and material of existing utility found, depth to top of cover, depth to bottom of utility, size of utility, paving type and thickness of paving, and if there is a conflict with the proposed Work.

Any pothole work with a diameter less than or equal to 6-inches in asphalt to be backfilled with black colored concrete to the finish surface. All areas larger than 6-inches in diameter

shall be properly backfilled and compacted and based paved pursuant to the requirements within these Specifications.

This work shall be done in accordance with Section 402-1.1 of the Standard Specifications. CONTRACTOR shall not be compensated for any delays or extra work brought about by its failure to perform the above-mentioned work. CONTRACTOR shall be responsible for any damage to existing utilities shown on the plans pursuant to its location operations as required under this subsection of the Standard Specifications.

Upon completion of the Project, the CONTRACTOR shall be required to remove, to the satisfaction of the ENGINEER, all utility locator markings and utility tie-out paint markings that either the CONTRACTOR, the CITY or utility companies make during the course of the work from the surfaces of sidewalks, driveway approaches, curb and gutters, using the removal method acceptable to the ENGINEER. Any damage to the existing improvements due to CONTRACTOR'S removal operation, shall be included in the various applicable items of work, and no additional compensation will be allowed therefor.

The CONTRACTOR shall notify owners of the utility companies at least two (2) working days in advance of any work (See Subsection 402-4 of these Special Provisions for utility contact information).

402-1.2 Payment

[Replace with the following:].

Payment for utility location by the CONTRACTOR shall be included in the Lump Sum Price bid for “Utility Potholing and GPR” and no further compensation will be allowed.

402-2 PROTECTION

[Add the following:].

The CONTRACTOR shall be responsible for protecting and supporting all existing utilities and maintaining the location of and access to all gate valves during construction. When damage to existing utilities is caused by the CONTRACTOR'S operations, the CONTRACTOR shall, at his expense, repair or replace damaged facilities promptly, in accordance with all applicable sections of the Standard Specifications and the standards of each affected utility. Should the CONTRACTOR fail to perform the required repairs or replacements, the cost of performing such repairs or replacement by others shall be deducted from any monies due or to become due the CONTRACTOR.

402-2.1 Payment

Payment for utility protection by the CONTRACTOR shall be included in the bid prices for the various items of work requiring utility protection and no further compensation will be allowed.

402-4 RELOCATION

[Add the following:].

Any miscellaneous utilities to be relocated by the CONTRACTOR, as indicated on the Plans, shall be relocated in a workmanlike manner, and all such work shall be done only at such

times which are acceptable to the utility owner. The CONTRACTOR shall schedule its relocation work in cooperation with the utility owner and shall be responsible for any costs resulting from the CONTRACTOR'S failure to do the work at times which are acceptable to the owner. The CONTRACTOR shall notify owners of the following companies at least two (2) working days in advance of any work:

AT&T (right-of-way) Valentina Gipson 3939 E Coronado St, Rm 2030 Anaheim, CA 92807 (o) 714-618-9132 Email: vk3921@att.com	Costa Mesa Sanitary District Javier Ochiqui, Management Analyst 290 Paularino Avenue Costa Mesa, CA 92626 (o) 949-645-8400 Email: jochiqui@cmsdca.gov
AT&T Rhonda Clary-Byers (engineer for Costa Mesa) or Doug DiPaolo 3939 E. Coronado St. Anaheim, CA 92807 (o) 714-618-9116 (o) 714-618-9125 Email: rc1315@att.com Email: dd2634@att.com	Costa Mesa Sanitation District Nabila Guzmán, Construction Notices 290 Paularino Avenue Costa Mesa, CA 92626 (o) 949-645-8400, ext. 230 Email: nguzman@cmsdca.gov
Mesa Water District Andrew Wiesner 1965 Placentia Ave. (inter-office mail acceptable) Costa Mesa, CA 92627 (o) 949-207-5458 (c) 949-631-1200 (24-hour) Email: andreww@mesawater.org	Orange County Water District (OCWD) Chris Olsen P.O. Box 8300 Fountain Valley, CA 92728 (o) 714-378-3200 (c) 714-378-3240 (24-hour) Email: colsen@ocwd.com Email: utilityrequest@ocwd.com
Mpower Communications, Inc. Mark Denning 2698 White Road Irvine, CA 92614 (o) 949-864-0296 (c) 949-547-6455 Email: mdenning@telepacific.com	CA Regional Water Quality – Santa Ana Region Mark Smythe 3737 Main St., Suite 500 Riverside, CA 92501 (o) 951-782-4130 (c) 951-543-8523 Email: msmythe@waterboards.ca.gov
Orange County Sanitation District (OCSD) Rudy Davila P.O. Box 8127 Fountain Valley, CA 92728 (o) 714-593-7348 (c) 714-593-3301 (24-hour) Email: RDavila@ocsd.com	Irvine Regional Water District Kelly Lew 15600 Sand Canyon Ave. Irvine, CA 92618 (o) 949-453-5586 (p) 949-729-7300 (24-hour) Email: lew@irwd.com
Irvine Regional Water District Brad Jackson (Area Construction Inspector) 15600 Sand Canyon Ave. Irvine, CA 92618 (o) 949-632-0627 (p) 949-729-7300 (24-hour) Email: jackson@irwd.com	SCE (Senior Compliance) Susan Morgan (o) 909-835-7527 (c) 909-835-7527 Email: susan.morgan@sce.com *No pre-construction meeting notices BUT Susan Morgan and Mónica Balderas would like to attend all UTILITY MEETINGS and be made aware of any fee schedule changes.

Irvine Ranch Water Dist. – Development Services* Christian Kessler, P.E. 15600 Sand Canyon Ave. Irvine, CA 92618 (o) 949-453-5300 (p) 949-453-5441 Email: kessler@irwd.com *utility requests	SCE (Service Planner – Orange Coast S/C) Damon Humphrey 7333 Bolsa Ave. Westminster, CA 92683 (o) 714-895-0534 Email: damon.humphrey@sce.com
Metropolitan Water District of So. California Civil Engineering Substructures Section Shoreh Zareh P.O. Box 54153 Los Angeles, CA 90054 (o) 213-217-7474 (c) 626-844-5610 (24-hour) Email: szareh@mwdh2o.com	SCE (Service Planner – Orange Coast S/C) Mónica Balderas 7333 Bolsa Ave. Westminster, CA 92683 (o) 714-329-2778 Email: monica.balderas@sce.com
Metropolitan Water District of So. California Civil Engineering Substructures Section Kieran Callanan P.O. Box 54153 Los Angeles, CA 90054 (o) 213-217-7474 (c) 626-844-5610 (24-hour) Email: kcallanan@mwdh2o.com	*Reminder* After facilities are identified on the plans, send the plans to Gail Gardner, and she will forward to SCE's planning department. Send to: gail.gardner@sce.com
SCE (Utility Notice Requests) Kasy Chapman 7333 Bolsa Ave. Westminster, CA 92683 (o) 714-895-0109 (c) 800-611-1911 (24-hour) Email: kasey.chapman@sce.com	Southern California Gas Co. Wilson Baldelomar P.O. Box 3334, SC8321 Anaheim, CA 92803 (o) 714-634-5091 (p) 800-603-7060 (24-hour) Email: wbaldelomar@semprautilities.com
SCE (Base Maps) Kimberly Gurule 1444 E. McFadden Ave., Bldg. "D" Santa Ana, CA 92705 (o) 714-796-9932 Email: maprequests@sce.com* *No pre-construction meeting notices to this address – map requests ONLY.	Southern California Gas Co. Wilson Baldelomar P.O. Box 3334, SC8321 Anaheim, CA 92803 (o) 714-634-5091 (p) 800-603-7060 (24-hour) Email: wbaldelomar@semprautilities.com

Southern California Gas Co. (Transmission) P.O. Box 2300 Chatsworth, CA 91313-2300 (o) 818-701-4546 Email: SoCalGasTransmissionUtilityRequest@ semprautilities.com	Verizon Business Investigations 2400 N. Glenville Dr. Richardson, TX 75082 (o) 972-729-6016 (o) 469-886-4238 Email: investigations@verizon.com *2nd Email: chuck.czumak@verizon.com Contact Verizon Business for issues involving: --- Brooks Fiber Properties, Inc. --- MCImetro Access Transmission Srvcs. --- MCI Telecommunications Srvcs --- MFS Telecom, Inc. --- SourtherNet, Inc. / WorldComNetwork Srvc. --- Intermedia Communications, Inc. --- XO Communications
Southern California Gas Co. Richard Clendineng P.O. Box 3334, SC8321 Anaheim, CA 92803 (o) 714-634-3262 Email: rclendineng@semprautilities.com	Charter Communications Don Simons Construction Manager, Zone 8 7142 Chapman Ave. Garden Grove, CA 92841 (o) 714-591-4871 Email: don.simons@charter.com
Southern California Gas Co. Peter Serrano P.O. Box 3334, SC8321 Anaheim, CA 92803 (o) 714-634-5067 Email: pserrano@semprautilities.com	Charter Communications Utility Research Requests E-mail: DL-SOCAL-CHARTER-ENGINEERING@CHARTER.COM
Spectrum Time Warner Cable José Román 12051 Industry St. Garden Grove, CA 92841 (o) 714-591-4846 (c) 657-263-3641 Email: jose.roman@charter.com	XO Communications Matt Bergine Engineer IV Specialist-Network Engineering & Operations (o) 949-417-7841 (c) 714-822-6207 Email: matt.bergine@verizon.com
Spectrum Time Warner Cable Main Number 7142 Chapman Ave. Garden Grove, CA 92841 (o) 714-709-3390	XO Communications Switchboard (o) 703-547-2000
Spectrum Time Warner Cable Jeff Cox Email: jeff.cox@twcable.com Spectrum Time Warner Cable *utility requests* Email: west-engineering-relo@twcable.com* Spectrum Time Warner Cable Ángel Vega (o) 714-591-4889 Email: angel.vega1@charter.com	Kinder Morgan Jordan Neuner (o) 310-628-4350 Email: jordan_neuner@kindermorgan.com Karly Payne, Administrative Assistant (o) 714-560-4604 Email: karly_payne@kindermorgan.com

Spectrum Time Warner Cable Max Sándoval, Construction Coordinator (o) 714-719-9629	Newport-Mesa Unified School District Víctor Garza (o) 714-424-5080 Email: vgarza@nmusd.us
OCTA – Stops & Zones Kyle Poff 550 S. Main St. Orange, CA 92863 (o) 714-560-5833 Email: kpoff@octa.net OCTA (Detour Coordination) Dispatch: 714-265-4330	Newport-Mesa Unified School District Tim Marsh, Administrative Director, Facilities Support Srvcs. (o) 714-4247527 Email: tmarsh@nmusd.us Newport-Mesa Unified School District Mary Gray Email: mgray@nmusd.us
OC Fair & Event Center Jerry Eldridge, Director of Facilities (o) 714-474-5983 Email: JEldgridge@ocfair.com	DIGALERT.ORG (24-HR) 811 2 days before digging.

Where existing utility main lines and conduits (excluding sewer main lines) and all utility service lines (excluding sewer laterals) are to be relocated or declared abandoned by the affected utility companies, the CONTRACTOR shall be responsible for contacting the respective utility representatives for coordinating the relocations and for determining the abandonments. The CONTRACTOR shall proceed with excavation in such a manner that will allow utility companies adequate and reasonable time to relocate service lines. The CONTRACTOR shall not be compensated for any delays caused by failure to coordinate the above work with utility companies.

[Replace the Section Title with the following:].

SECTION 403 – MANHOLE AND VALVE ADJUSTMENT AND RECONSTRUCTION

403-1 GENERAL

[Replace with the following:].

CONTRACTOR shall adjust existing manholes and water valves to grade conforming to all applicable sections of the latest edition of the Standard Specifications, Mesa Water District (MWD) Standards, and to the provisions of the City of Costa Mesa Standard Plans.

The CONTRACTOR shall notify affected utility owners at least 5 working days in advance of the need to commence work required prior to paving operations and again for work required after paving operations. The Contractor shall mark locations of utility vaults where utility companies specifically state adjustments shall be made after paving. If it is found to impractical for the utility owner to complete remodeling or adjustment to structures, as evaluated by the ENGINEER, then the Contractor shall be absolved of further responsibility in connection therewith, and the structure shall be adjusted to grade by the utility owner under permit or ordinance procedure established by the CITY for utility cuts in pavement.

The manhole and valve box locations and distance from curb to center shall be marked on the curb face by the CONTRACTOR.

[Replace entire Subsection with the following:].

403-3.1 Water Valves

Water valves shall be protected in place and shall be accessible at all times during construction.

Valve covers shall be marked as to their location by the CONTRACTOR prior to the placement of the pavement. The CONTRACTOR shall furnish new valve cans if existing cans are damaged during operation. Existing covers shall be adjusted to new pavement grade 48 hours after paving operation.

CONTRACTOR shall notify the respective water district at least 2 working days prior to beginning work. All work adjusting water valve cans and covers to grade shall be inspected and approved by MWD.

Valve boxes shall be checked with a valve key for proper operation.

The Concrete for the valve covers and collars shall be 560-C-3250.

The CONTRACTOR shall be responsible for maintaining location of, and access to, all water line gate valves during construction operations. The CONTRACTOR may salvage and utilize all existing caps or sleeves, but shall be required to furnish all sleeve extensions. Any lost caps or sleeves shall be replaced by the CONTRACTOR at his cost.

All existing broken water sleeves shall be removed and replaced by the CONTRACTOR who shall contact the respective utility to pick up new sleeves for replacement.

404-10 PAVEMENT TRANSITIONS

[Add the following:].

Where required, temporary asphalt concrete ramps shall be installed to meet all current ADA accessibility requirements. Additionally, temporary asphalt concrete shall be placed at all cross-street transition sections and driveways, as required for grade change conformance tapers.

CITY OF COSTA MESA, CALIFORNIA

PROJECT MANUAL

TECHNICAL SPECIFICATIONS

FOR

JACK HAMMETT SPORTS COMPLEX

PARKING LOT AND ADA UPGRADES

2750 FAIRVIEW ROAD

Prepared By:

David Volz Design
151 Kalmus Drive, Suite M8
Costa Mesa, CA 92626
(714) 641-1300

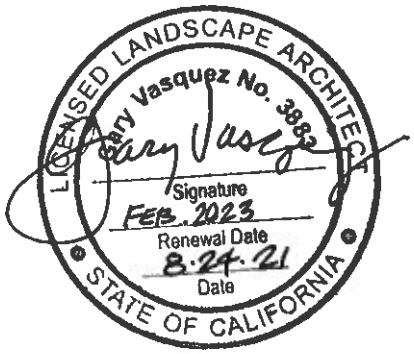

AUGUST 2021

TECHNICAL SPECIFICAIONS – CIVIL
TABLE OF CONTENTS

DIVISION 01 – GENERAL REQUIREMENTS

Section 01 71 13 Mobilization
Section 01 55 26 Traffic Control

DIVISION 31 – EARTHWORK

Section 31 11 00 Clearing, Grubbing and Demolition
Section 31 25 14 Stabilization Measures for Erosion and Sedimentation Controls

DIVISION 32 – EXTERIOR IMPROVEMENTS

Section 32 01 13.61 Slurry Seal
Section 32 16 00 Curb, Gutters, Sidewalks, and Driveways
Section 32 12 16 Asphalt Paving
Section 32 17 23 Pavement Markings
Section 32 17 23.13 Painted Pavement Markings
Section 32 17 23.23 Raised Pavement Markings
Section 32 17 23.33 Plastic Pavement Markings

DIVISION 33 – UTILITIES

Section 33 01 30.86 Manhole Rim Adjustment

SECTION 01 71 13 - MOBILIZATION

PART 1 – GENERAL

1.01 SUMMARY:

A. Provisions of the General and Supplementary Conditions and Division 01 apply to this section.
B. Mobilization shall comply with Section 7-3.4 of the General Provisions.

C. Section Includes:

1. Mobilization shall consist of preparatory work and operations. It shall include, but not be limited to, the movement of personnel, equipment, materials and incidentals to the project site necessary for work on the project.

1.02 QUALITY ASSURANCE

A. Comply with Standard Specifications for Public Works Construction, 2018 edition, as a minimum requirement.

PART 2 - PRODUCTS (NOT USED)

PART 3 – EXECUTION

3.01 WORK PREPARATIONS AND OPERATIONS

A. Mobilization shall include project overhead costs, including costs and fees for obtaining construction permits and/or permit riders as may be required by law, and for obtaining bonds, insurance and financing for the entire project prior to beginning work.

B. Mobilization shall include compliance with all water quality and air quality laws; furnishing all water required for the construction work; protection of utilities, trees, fences, walls, landscaping and other facilities; and the relocations as shown on the plans.

C. The Contractor is responsible for securing an adequate storage site for equipment and materials.

D. Contractor shall confine his operations and work area within the Jack Hammett Sports Complex Parking Lot. No encroachment into private property will be permitted without the prior written consent of the property owner. Obtaining this consent will be the responsibility and the costs of the Contractor. Material shown on the plans or designated in the Special Provisions which is to be used in the reconstructed work and which has been damaged or destroyed as a result of the

Contractor's operations shall be repaired or replaced at the option of the ENGINEER by the Contractor at the Contractor's sole expense.

E. The Contractor shall provide personnel to keep the construction site in a safe condition at all times, including non-working hours.

F. A Construction Schedule shall comply with the requirements within Section 6-1 of the General Provisions and Special Provisions of these Contract Documents. The proposed work shall be done in phases in order to provide parking spaces for employees and visitors, which shall be indicated in a Staging and Storage Plan.

G. Mobilization shall include scheduling and phasing of the work per the requirements of the City. The Contractor shall coordinate all construction activities with the City's Parks and Public Services Departments.

H. The Contractor shall have on the work site at all times, as his agent, a competent English speaking superintendent capable of reading and thoroughly understanding the plans, specifications, and other related documents.

3.02 CLEANUP:

A. Remove rubbish, debris and waste materials and legally dispose of off the Project site.

PART 4 – PAYMENT

Measurement and Payment for **Mobilization** shall be at the **Lump Sum (LS) Price** basis as bid for **Mobilization**. The price shall include all the preceding specifications and requirements and it shall be considered full compensation for obtaining all business licenses and permits, as required for the entire project, from all related agencies, including, but not limited to, utility companies, private and public agencies and the CITY; and complying with the requirements specified in those licenses and permits; coordination, field office facility, all required submittals specified within these Specifications, and incidentals necessary to perform all related items of work. Progress payments for Mobilization bid item shall be paid for in accordance with the completion percentage of the Project to the CONTRACTOR and shall include the cost of such mobilization/demobilization and administration during the entire Contract period. No additional compensation will be allowed.

END OF SECTION

SECTION 01 55 26 - TRAFFIC CONTROL

PART 1 – GENERAL

1.01 SUMMARY:

A. Provisions of the General and Supplementary Conditions and Division 01 apply to this section.

B. Section Includes:

1. The Contractor shall provide traffic control and access in accordance with Part 6 Temporary Traffic Control of the Standard Specifications, the Caltrans' Manual of Traffic Controls in Construction and Maintenance Zones, latest edition, these special provisions and the standards contained in the Work Area Traffic Control Handbook (WATCH), published by Building News, Inc. (latest edition).

2. Construction work operations shall be performed pursuant to Section 2-4.1 of the General Provisions. During weekends, the Contractor shall maintain the parking lot in a safe drivable condition for local access, unless otherwise approved.

3. The Jack Hammett Sports Complex sports fields are used by various youth sports groups in the evenings and on weekends. A section of parking must be available at all times for the public's use. The CONTRACTOR is directed to Appendix B to these Specifications that depicts a site map showing three areas of the Project site. The Contractor shall keep one area open to the public for parking and access to the fields at all times during construction and utilize fencing and other means to delineate the active work zone area. Additionally, the CONTRACTOR shall prepare and submit to the ENGINEER for approval at the pre-construction meeting, a Staging and Storage Plan that provides the details and incorporates the operations associated with the staging and public access requirements thereof.

1.02 QUALITY ASSURANCE

A. Comply with Standard Specifications for Public Works Construction, 2018 edition, as a minimum requirement.

PART 2 - PRODUCTS (NOT USED)

PART 3 – EXECUTION

3.01 CONSTRUCTION WORK

A. No work shall be permitted the week of Thanksgiving or Christmas. The Contractor shall complete all work so that the street shall be open to accommodate traffic circulation during these holiday periods. The minimum width for parking shall be 8 feet. The Contractor shall maintain a minimum of five (5) foot clearance from open excavations and two (2) foot clearance from other obstructions.

B. A minimum of one four (4) foot wide pedestrian walkway shall be maintained and safely delineated along each public street and within the Project area at all times during construction.

C. The Contractor shall use temporary asphalt surfacing at his own expense as required to maintain traffic in a safe and non-disruptive manner at all approaches and driveways. The Contractor shall install temporary asphalt to select properties as directed by the ENGINEER. The CONTRACTOR shall construct temporary AC ramps to provide safe and drivable access to residents and businesses. Transitional and temporary asphalt concrete shall be removed prior to placement of new AC pavement. Any locations that are not considered drivable and/or safe by the ENGINEER will be corrected at the direction of the ENGINEER. The Contractor will not be paid for such corrective action and shall be charged for any costs incurred by the City.

D. Trenches left open overnight shall be bridged in a safe and acceptable manner at all driveways and walkways to provide safe access.

E. The CONTRACTOR shall provide access as required to accommodate special circumstance at any residence including access for disabled, impaired, special medical needs, etc.

The Contractor shall provide:

C. Scheduling

A Construction Schedule shall comply with the requirements within Section 6-1 of the General Provisions and Special Provisions of these Contract Documents. The proposed work shall be done in phases in order to provide parking spaces for employees and visitors, which shall be indicated in a Staging and Storage Plan. Adequate number of parking spaces shall be provided for employees and visitors during construction. The City will determine the exact number of spaces needed during construction.

F. Notification

Prior to restricting normal access from the public street to adjacent properties, the CONTRACTOR shall notify each property owner or owner's agent, informing them of the nature of the access restriction and the approximate duration of the restriction. The CONTRACTOR shall make every effort possible to minimize such restrictions.

The Contractor shall coordinate all construction activities with the ENGINEER and the City Construction Manager.

The Contractor shall be responsible for the notification to affected residences and businesses informing them of the pending project and scope of work.

Two weeks prior to the commencement of construction, the contractor shall install one project information sign at each end of the construction limit as directed by the City. City will provide the signs to the contractor. The contractor is responsible in modifying the construction dates on each signs.

Furnish, install and maintain in place "No Parking - Tow Away" signs, which shall be posted at least seventy two (72) hours prior to commencement of roadwork work. On the sign, Contractor shall print the hours, day(s) and date of closure in two-inch-high letters and numbers. A sample of the completed sign shall be approved by the ENGINEER five (5) working days prior to posting. The signs shall be spaced at a maximum of 50 feet from the parking lot entrance. For any work to be performed on Monday morning or a morning following a holiday, the Contractor must post "No Parking - Tow Away" signs with all requirements as specified at least 48 hours prior to weekend or holiday begins.

E. Protect and preserve all the existing pavement outside construction limits in the same condition as existing. Contractor shall replace and/or repair the damaged area to the satisfaction of the ENGINEER at no cost to the City if damaged by the Contractor.

F. Notify the trash pick-up company "Costa Mesa Disposal" and all other trash haulers licensed to do business within the City of Costa Mesa of the schedule of work and the limitation of access. Coordinate with trash haulers to ensure that regularly scheduled trash collection will occur. Contact Public Services Department at (714) 754- 5307 for addresses of Costa Mesa Disposal and other trash haulers; also notify U.S. Postal Service and all other affected utilities (Edison, sewer, water, gas, telephone, etc.).

G. Provide emergency access for the fire trucks and other emergency vehicles at all times. Notify the Police and Fire Departments in writing two (2) working days prior to construction.

H. Keep the areas adjacent to the construction site clear of any objects that may be hazardous to pedestrians. The Contractor shall be responsible for the project

safety on a 24-hour basis each calendar day for the entire duration of the project.

I. Notify the ENGINEER five (5) working days before commencing the repair work as stated in "E" above.

J. The Contractor shall provide access as required to accommodate special circumstance at any residence including access for disabled, impaired, special medical needs, etc.

TRAFFIC CONTROL

The City will only provide inspection during the designated construction hours Monday through Friday except City observed holidays. Unless noted otherwise within these specifications. Any work done without inspection will be rejected. The replacement costs for rejected work will be borne by the Contractors. The Contractor shall maintain a 24-hour emergency service to remove, install, relocate, and maintain warning devices and shall furnish to the ENGINEER, names and telephone numbers of at least three people responsible for this emergency service. In the event these people do not promptly respond when notified, or it becomes necessary to call other forces to accomplish emergency services, the Contractor will be held liable for any costs incurred.

All existing permanent traffic control signs, barricades and devices shall remain in effective operation unless a substitute operation is arranged for and approved by the ENGINEER. Prior to the start of each work day, the Contractor shall perform all necessary work incidental to and commensurate with the proper signing, detouring, barricading, etc., heretofore and hereinafter specified that is required for that particular day's schedule of operations. No construction shall be permitted such until such signing and detouring operations have been completed.

All working areas utilized by the Contractor to perform work during the hours of darkness shall be lighted to conform to the minimum illumination intensities established by the California Division of Occupational Safety and Health Construction Safety Orders. All lighting fixtures shall be mounted and directed in a manner preventing glare to approaching traffic.

Plans indicating the Haul Route for the Contractor's equipment movement in and out of the work site must be submitted to the ENGINEER pursuant to Section 7-3.4.1 of the General Provisions. The Haul Route plans, which meet the City's requirements, will be approved and returned to the Contractor; otherwise, further revisions are required until they are acceptable to the City. The Contractor shall submit one Haul Route plan for each phase to the ENGINEER for Approval, and the approved Haul Route plans shall be strictly adhered to by the Contractor during all phases of the construction.

The Contractor shall prepare a Staging Plan pursuant to the parking areas as defined within Section G, Appendix B – Staging Areas Map of these Specifications that always provides one access location to the fields for public use (see Section G,

Appendix B – Staging Areas Map).

The Contractor shall provide public access to the sports fields at all times during construction activities at designated protected and safe ingress/egress areas pursuant to its approved Staging Plan.

The Contractor shall coordinate the ingress/egress to the site with the adjacent property owners with respect to obtaining the necessary approvals, access rights, and installing the appropriate traffic control devices that clearly delineate the path of travel into and out of the Project site.

Any deviation from these requirements is not permitted; all the Contractor's operations will be immediately stopped if any of these requirements is violated. No further payments will be made to the Contractor until problems are resolved according to the City's requirements.

PART 4 – PAYMENT

Payment for **Traffic Control & Public Safety** shall be at the **Lump Sum (LS)** price paid and shall be considered full compensation for all of the preceding specifications and requirements and include all labor, materials, supplies, equipment, and other related items as required to complete the work specified herein. Progress payment for **Traffic Control & Public Safety** shall be based on the completion percentage of the entire project and no additional compensation will be allowed.

END OF SECTION

SECTION 31 11 00 - CLEARING, GRUBBING AND DEMOLITION

PART 1 - GENERAL

1.01 SUMMARY:

A. Provisions of the General and Supplementary Conditions and Division 31 apply to this section.

B. Section Includes:

1. Removal and disposal of vegetation, sod/grass, grass roots, shrubs, tree stumps, trees, upturned stumps, weed growth, tree roots, brush, rubbish, debris, soil, and other objectionable materials in order to install or construct the new works of improvements, within limits of the Work as depicted on the plans.
2. Removal and disposal of existing improvements as depicted on the plans, to be removed inclusive of chain link fence, light pole, sliding gate, chain link gate, concrete ditch, 6” curb and gutter, 6” Curb Type A1-6, ADA ramps, PCC sidewalk, concrete wheel stops, AC pavement, base material, subbase material, and concrete pad in order to construct the new works of improvements within the limits of the Work as shown on the plans and specified within these Specifications.

1.02 QUALITY ASSURANCE

A. Comply with Standard Specifications for Public Works Construction, 2018 edition, as a minimum requirement.

PART 2 - PRODUCTS (NOT USED)

PART 3 – EXECUTION

3.01 CLEARING AND GRUBBING

A. Clearing and Grubbing shall conform to Subsection 300-1 of the GREEN BOOK edition 2018, and shall include all clearing and grubbing for the construction of the new improvements as depicted within the plans, and any clearing and grubbing and/or removal and replacement shown on the plans for which there is no bid item of work.

B. The Work shall also include the removal and disposal of existing concrete, concrete pad and Asphalt Concrete (AC) pavement, existing chain link fence and gate, existing sliding gate, existing handicap ramp, existing concrete ditch, existing

trees, existing light poles and foundation, and existing irrigation valves within the limits of work, as shown on the plans and as directed by the ENGINEER. Contractor shall coordinate with the ENGINEER prior to the removal of the existing trees and light poles and foundation. Any landscaping and irrigation destroyed by construction operations shall be replaced by the Contractor. Any plant materials and irrigation system for replacement shall be approved by the City prior to any construction. The Contractor shall control any dust that is caused by clearing and grubbing operations.

C. Removal and excavation shall include subgrade preparation and the removal and disposal of the existing parking lot pavement to the required subgrade, including asphalt concrete, aggregate base, Portland cement concrete (reinforced or not); cement/lime treated material; macadam; slurry backfill; petromat / pavement reinforcing fabric; or other materials which may be encountered within the proposed parking lot. No additional compensation will be allowed for removal or disposal of any petromat / pavement reinforcing fabric or other materials, which may require special handling or disposal.

3.02 CLEANUP:

A. Remove rubbish, debris and waste materials and legally dispose of off the Project site.

PART 4 – PAYMENT

Payment for **Clearing and Grubbing** shall include the aforementioned Work described herein and shall be at the **Lump Sum (LS)** price bid for **Clearing & Grubbing** and shall be considered full compensation for providing all labor, materials, equipment, supplies, disposal costs, and other related work as required in order to install the new works of improvements as depicted within the plans and as specified within these specifications. No additional compensation shall be allowed. Payment for this item of work shall be paid as a percentage of completed work to date.

Payment for **Remove and Dispose of Existing AC Pavement** shall include the aforementioned Work described herein and shall be paid per **Square Foot (SF)** and shall be considered full compensation for providing all labor, materials, equipment, supplies, disposal costs, saw cutting, base excavation and removal, AC removal, and other related work as required in order to remove and dispose of the existing AC pavement section, as depicted within the plans and as specified within these specifications. No additional compensation shall be allowed.

Payment for **Remove and Dispose of Existing Chain Link Fence** shall include the aforementioned Work described herein and shall be paid for at the **Linear Foot (LF)** price bid and shall be considered full compensation for providing all labor, materials, equipment, supplies, disposal costs, and other related work as required in order to remove and dispose of the existing chain link fence as depicted within the plans and as specified within these specifications. No additional compensation

shall be allowed.

Payment for **Remove Existing Tree** shall include the aforementioned Work described herein and shall paid per **Each (EA)** and shall be considered full compensation for providing all labor, materials, equipment, supplies, disposal costs, and other related work as required in order to remove and dispose of the existing trees as depicted within the plans and as specified within these specifications. No additional compensation shall be allowed.

Payment for **Remove and Dispose of Existing Light Pole and Foundation** shall include the aforementioned Work described herein and shall be paid per **Each (EA)** and shall be considered full compensation for providing all labor, materials, equipment, supplies, disposal costs, and other related work as required in order to remove and dispose of the existing light pole and foundation as depicted within the plans and as specified within these specifications. No additional compensation shall be allowed.

Payment for **Remove and Dispose of Existing Sliding Gate** shall include the aforementioned Work described herein and shall be paid per **Each (EA)** and shall be considered full compensation for providing all labor, materials, equipment, supplies, disposal costs, and other related work as required in order to remove and dispose of the sliding gate as depicted within the plans and as specified within these specifications. No additional compensation shall be allowed.

Payment for **Remove and Dispose of Existing Chain Link Gate** shall include the aforementioned Work described herein and shall be paid per **Each (EA)** and shall be considered full compensation for providing all labor, materials, equipment, supplies, disposal costs, and other related work as required in order to remove and dispose of the chain link gate as depicted within the plans and as specified within these specifications. No additional compensation shall be allowed.

Payment for **Remove and Dispose Curb and Gutter** shall include the aforementioned Work described herein and shall be paid for at the **Linear Foot (LF)** price bid and shall be considered full compensation for providing all labor, materials, equipment, supplies, disposal costs, and other related work as required in order to remove and dispose of the existing curb and gutter as depicted within the plans and as specified within these specifications. No additional compensation shall be allowed.

Payment for **Remove and Dispose Concrete Curb** shall include the aforementioned Work described herein and shall be paid for at the **Linear Foot (LF)** price bid and shall be considered full compensation for providing all labor, materials, equipment, supplies, disposal costs, and other related work as required in order to remove and dispose of the existing concrete curb as depicted within the plans and as specified within these specifications. No additional compensation shall be allowed.

Payment for **Remove and Dispose Existing Curb Ramp** shall include the aforementioned Work described herein and shall be paid per **Each (EA)** and shall be considered full compensation for providing all labor, materials, equipment, supplies, disposal costs, and other related work as required in order to remove and dispose of the curb ramp as depicted within the plans and as specified within these specifications. No additional compensation shall be allowed.

Payment for **Remove and Dispose Concrete Gutter** shall include the aforementioned Work described herein and shall be paid for at the **Linear Foot (LF)** price bid and shall be considered full compensation for providing all labor, materials, equipment, supplies, disposal costs, and other related work as required in order to remove and dispose of the existing concrete gutter as depicted within the plans and as specified within these specifications. No additional compensation shall be allowed.

Payment for **Sawcut and Remove PCC Sidewalk** shall include the aforementioned Work described herein and shall be paid for per **Square Foot (SF)** price bid and shall be considered full compensation for providing all labor, materials, equipment, supplies, disposal costs, sawcutting, and other related work as required in order to remove and dispose of the existing PCC sidewalk as depicted within the plans and as specified within these specifications. No additional compensation shall be allowed.

END OF SECTION

SECTION 31 25 14 - EROSION AND SEDIMENTATION CONTROLS

PART 1 – GENERAL

1.01 SUMMARY:

A. Provisions of the General and Supplementary Conditions and Division 31 apply to this section.

B. Section Includes:

1. Best Management Practices BMP's

1.02. QUALITY ASSURANCE

A. Comply with Standard Specifications for Public Works Construction, 2018 edition, as a minimum requirement.
B. Comply with Section **3-12.6** of the General Provisions.

PART 2 - PRODUCTS (NOT USED)

PART 3 – EXECUTION

3.01 BEST MANAGEMENT PRACTICES

A. Per the Federal Clean Water Act, the Contractor is required to eliminate pollution to waters of the United States. This project will require the Contractor to implement Best Management Practices (BMPs). The Contractor shall implement the Project's Erosion Control Plan which outlines specific BMPs to be used during construction to ensure that sediment from storm runoff and construction activities does not enter storm drains. Some of the primary water pollution control measures anticipated for this project include, but are not limited to, covering all storm drain inlets in the project vicinity with water permeable fabric and gravel bags prior to performing any removal or paving operations; properly fueling and cleaning all equipment/vehicles; maintaining an ample supply of gravel/sand bags on-hand in the event of rain; properly contain any chemicals; properly covering all incoming material trucks and all out going debris hauling vehicles; providing restroom facilities for workers; and regular street sweeping of the Work Area and Haul Routes to the satisfaction of the ENGINEER.

B. The requirements of all of the following agencies shall be met and maintained and where there is a conflict between requirements, the most stringent requirement shall govern:

- Santa Ana Regional Water Quality Control Board

The Contractor shall confirm that all of the BMPs have been adequately detailed to addresses his/her anticipated construction operations.

PART 4 – PAYMENT

Payment for **Water Quality Best Management Practices (BMPs)** shall be per the **Lump Sum (LS)** price bid and shall provide full compensation for all costs incurred by the Contractor for Implementing Best Management Practices, maintaining the BMPs, complying with the requirements of the Project's Erosion Control Plan and the cost of any required permits and no additional compensation will be made therefore. Payment for this item of work shall be paid as a percentage of completed work. No additional compensation shall be allowed therefor.

END OF SECTION

SECTION 32 01 13.61 - SLURRY SEAL

PART 1 – GENERAL

1.01 SUMMARY:

A. Provisions of Division 32 apply to this section.

B. Section Includes:

1. Slurry seal parking areas as indicated.

1.02 SUBMITTALS:

A. Shop Drawings: Submit site plan indicating slurry seal.

B. Product Data: Manufacturer's technical data for materials and products. The Contractor shall furnish a certified statement from the manufacturer of the emulsion the analysis of the base asphalt used in its manufacture.

C. Test results shall be certified by the laboratory and submitted to the ENGINEER for approval.

1.03 QUALITY ASSURANCE:

A. Comply with Standard Specifications for Public Works Construction, 2018 edition, as a minimum requirement.

1.04 PROJECT CONDITIONS:

A. Information on Drawings or in soils report does not constitute a guarantee of accuracy or uniformity of soil conditions over the Project site.

PART 2 – PRODUCTS

The slurry seal work consists of furnishing all labor, materials, tools, equipment and incidentals necessary for the complete application of a TYPE II Slurry Seal with 3% rubber latex, as indicated in the Description of work. The locations to receive Slurry Seals are shown on the project plans.

The slurry seal shall be applied only when the existing surface is clean and free of visible moisture. Slurry seal shall be applied only when pavement is above 60º F and rising, unless otherwise directed. The slurry seal shall be properly proportioned, mixed and spread evenly on the surface as specified herein and as directed. The cured slurry shall have a homogeneous appearance, fill all surface voids and penetrate cracks, adhere firmly to the surface and have a skid-resistant texture.

MATERIAL - Latex shall be Ultrapave 65K (compatible with the emulsified asphalt for this project) manufactured by Textile Rubber and Chemical Co., Inc. La Mirada, California, (714) 997-1143, or equal, approved by the ENGINEER prior to ordering. Latex shall be added to the emulsified asphalt at the asphalt plant at the rate of 3 parts latex to 100 parts emulsified asphalt by volume. Latex mixed in the emulsified asphalt shall be kept in a suspended state by an agitating mixer every three (3) days. The mineral aggregate shall be 100% crushed rock, of angular, sound, durable, hard, resistant to abrasion and free from laminations, weak cleavages and undesirable weathering. It shall be of such character that it will not disintegrate from the action of air, water or other conditions to be met in handling and placing and have a specific gravity of no less than 2.60. All materials shall be clean and free from deleterious impurities including alkali, earth, clay and refuse.

The grading of aggregate shall conform to the following gradations.

Sieve Size	TYPE I Percent Passing	TYPE II Percent Passing
3/8	100	100
No. 4	100	90-100
No. 8	90-100	65-90
No. 16	65-90	45-70
No. 30	40-60	30-50
No. 50	25-42	18-36
No. 100	15-30	10-24
No. 200	10-25	5-15

Care should be exercised to prevent segregation of aggregate in storage and handling: if segregation occurs, the material shall be worked prior to mixing in a manner to hold segregation to the minimum. Aggregates shall have a percentage of water not more than 40 percent when tested according to ASTM D131. When tested in accordance with ASTM D2419, the aggregate blend shall have a sand equivalent of not less than 55. In addition, the aggregate will be tested for conformity to ASTM C117, ASTM C128 and ASTM C136. Mineral fillers such as portland cement, limestone dust or fly ash shall be considered as part of the blended aggregate and shall be used in the minimum required amounts; fillers shall meet the gradation requirements of ASTM D242. Bids shall be based on the range of aggregate and emulsion weights specified herein before. The amount of emulsified asphalt shall be determined by the job mix for the specified wear value. If the amounts used are more than the specified range, an adjustment in the contract price will be made as provided in the contract.

Emulsified asphalt shall be anionic type, Grade SS-1h, conforming to AASHTO M140. Cationic type, Grade CSS-1h, conforming to AASHTO M208 or Cationic Grade CQS- 1h conforming to these specifications.

Grade CQS-lh Emulsion. CQSO-lh shall use a paving asphalt with a penetration in the range of 60-70 as a base. It shall meet the following specifications when tested

according to appropriate ASTM methods:

Emulsion	Test	
Furol viscosity at 77 º F, Sec	20-100	D244
Residue from distillation; % by weight	57 Min	D244
Mixing Test (job) sec. @ 70 º F	30 Min	
Sieve Test (% retained on No. 20)	10 MAX	D244
Particle Charge Test	Positive	
Storage stability; one day settlement	1% MAX	

Residue	Test	
Penetration	40-110	D5
Solubility in carbon test. %	97.5 Min	
Ductility 77º F. cms	40 Min	D113

Water shall be potable.

Emulsified Asphalt Slurry Mixture. The mixture shall have the following characteristics:

(a) Resistance to Abrasion. Allowable wear of cured slurry mix as tested in accordance with the wet track abrasion test shall not exceed 100. The cured slurry, being tested shall not pick up on the roller of the apparatus.

(b) Fluidity. The mixture shall be sufficiently free flowing to fill cracks in the pavement.

(c) Non-segregation. The mixture shall not segregate during or after laydown.

(d) Surface Texture. The mixture shall have a non-skid texture.

PART 3 – EXECUTION

3.01 SLURRY SEAL:

A. The slurry seal shall be applied only when the existing surface is clean and free of visible moisture. Slurry seal shall be applied only when pavement is above 60º F and rising, unless otherwise directed. The slurry seal shall be properly proportioned, mixed and spread evenly on the surface as specified herein and as directed. The cured slurry shall have a homogeneous appearance, fill all surface voids and penetrate cracks, adhere firmly to the surface and have a skid-resistant texture.

B. APPLICATION.

FIELD SAMPLING AND TESTING. All sampling and testing shall be conducted by the Contractor as specified herein, at the expense of the Contractor. All materials and materials sources shall be approved by the ENGINEER not less than ten (10) days prior to the use of such materials in the work. Duplicate samples shall be provided to the ENGINEER on an average of two samples a week. Duplicate samples shall be taken at the same time and in the same manner as the original ones.

C. SLURRY CREW. Each slurry crew shall be composed of a coordinator at the project site at all times, a competent quick-set mixing man, a competent licensed driver, two squeegee men, and sufficient laborers for any handwork and cleanup.

D. SAMPLING. Method of sampling and the sieve analysis of aggregates shall be in accordance with ASTM D75. Methods of sampling bituminous material shall be in accordance with ASTM D140.

E. TESTING.

JOB MIX TEST. Samples of the asphalt emulsion and slurry seal mixture shall be taken at the rate of at least one set per day from each mixture used on the project, and shall be tested by the Contractor to determine conformance with the job mix proportions. The following tests shall be performed by a City approved engineering test laboratory:

a. Emulsified Asphalt. Percent residue of the emulsion by evaporation (hot plate residue).
b. Slurry Seal Mixture
c. Moisture content as percent of dry weight of slurry before extraction.
d. Asphalt content as percent of dry weight of extracted aggregate.
e. Gradation of extracted aggregate.
f. Percent of emulsified asphalt in slurry based weight of dry aggregates.

F. CONSTRUCTION

EQUIPMENT. The equipment used in the performance of the work shall be subject to approval and shall be maintained in satisfactory working condition at all times. Descriptive information on the slurry mixing and applying equipment to be used shall be submitted for approval not less than 14 days before the work starts.

CONTINUOUS-FLOW MIXER. The Slurry mixing machine shall be a multi-blade or spiral continuous-flow unit in good working condition and be capable of delivering accurately a predetermined proportion of aggregate, water, emulsion, and accelerator or retardant to the mixer and discharging the thoroughly mixed slurry on a continuous basis. Each mixer shall have a metering device to measure the quantity of water in gallons used in each load of slurry and a separate metering

device or equivalent which meets the approval of the City to measure the quantity of emulsified asphalt used in each load of slurry. Emulsion stored compartments on all slurry mixing equipment shall be calibrated in (10) ten gallon increments. An accurate measuring device shall be carried on each slurry machine. All slurry mixing machines shall be equipped with a Fines Feeder for the adding of cement or Aluminum Sulfate. In the event the metering devices stop working, the Slurry unit(s) will stop the application process until they are fixed.

The mixer shall thoroughly blend all materials to form a homogeneous mass before leaving the mixer.

SELF-CONTAINED SLURRY, MACHINES. The machine shall be capable of rapid discharge of the mixed materials into a spreader having suitable controls to allow adjustment for variations in pavement grades and slope. The spreader shall be similar to the spreader box as herein before specified. The spreader box may be either an integral part of a self-contained slurry machine or a separate towed unit. The self-contained slurry unit shall be mounted on a truck or other vehicle capable of producing evenly controlled low rates of speed throughout the operation so that the slurry is spread evenly and all cracks are filled.

SLURRY SPREADING EQUIPMENT. Attached to the mixer machine shall be a mechanical type squeegee distributor equipped with flexible material in contact with the surface to prevent loss of slurry for the distributor. It shall be maintained to prevent loss of slurry on varying grades and crown by adjustments to assure uniform spread. There shall be a lateral control device and a flexible strike-off. The box shall be kept clean and the build-up of asphalt and aggregate on the box shall not be permitted. The use and condition of burlap drags or other drags shall be approved by the ENGINEER.

CLEANING EQUIPMENT. Power brooms, power blower, air compressors, water flushing equipment and hand brooms shall be suitable for cleaning the surface and cracks of the old surface. Contractor shall furnish a power street sweeper with operator to clean the asphalt pavement the same day the street is sealed. The sweeper shall have a steel gutter broom and a rear plastic broom, and a three (3) yard minimum capacity hopper. If water is used, cracks will be allowed to dry thoroughly before slurry sealing. Manholes, valve boxes, drop inlets and other service entrances will be protected from the slurry seal by a suitable method. The ENGINEER shall approve the surface preparation prior to sealing.

Surface oil and grease shall be removed or sealed with emulsified gilsonite or equivalent material approved by the ENGINEER before the application of slurry seal.

HAND TOOLS. Hand squeegees, shovels, hand burlap drags and other equipment shall be provided as necessary to perform work.

PROCEDURES. No application of slurry seal shall occur until cleaning, weed removals, crack sealing and other preliminary pavement repairs have been

completed. The surface shall be thoroughly cleaned and swept prior to the application of slurry seal. For street segments not adjacent to Public Schools, the application of slurry shall be scheduled during the weekday, Monday through Friday, and commence after 8:00 A.M. and shall be complete prior to 2:30 P.M. For street segments adjacent to Public Schools, the application of slurry seal shall be scheduled only on Saturday, and shall commence after 8:00 A.M. and shall be complete prior to 3:00 P.M. No slurry shall be applied when the weather forecast indicates a probability of rainfall or when the air or pavement temperature is no higher than 60 º F and falling. Slurry may be applied when both air and pavement temperatures are 60 º F and rising.

The surface of the pavement shall be fogged with water directly preceding the application of the slurry. The slurry mixture shall be of the designated consistency when deposited on the surface and no additional elements shall be added. Total mixing time shall not exceed four (4) minutes. A sufficient amount of slurry shall be carried in all parts of the spreader at all times so that a complete coverage is obtained. Mixing materials shall be prevented from rippling, lumping, balling and segregation of emulsion and aggregate fines from the course aggregate.

Where the completed slurry is not uniform in color, the street shall be treated to eliminate the color variation at the Contractor's expense. The method to treatment shall be approved by the City.

MANHOLE AND WATER VALVE COVERS. All metal manhole and water valve covers shall be protected from the application of slurry seal. After the slurry seal has been applied and cured, the Contractor shall remove all slurry seal material attached to manhole and water valve covers.

PAVEMENT MARKERS. All raised pavement markers shall be removed prior to slurry seal and replaced per Caltrans Standards.

JOINTS. No excessive build-up causing unsightly appearance shall be permitted on longitudinal or transverse joints. Unless otherwise approved, the overlap at the joints will not exceed 2" and shall be feathered; excessive unapproved overlaps will not be paid for. Joints between asphalt pavement and concrete pavement and/or concrete gutters shall be completely and neatly sealed without excessive slop-over onto the concrete; any unsightly and objectionable excess shall be immediately removed. At street intersections and at the beginning and end of work segments, the slurry shall be neatly spread or trimmed to a straight line defined by the near curb lines of the street adjacent to the work.

Approved squeegees or lutes shall be used to spread slurry in areas inaccessible to the machine. Care shall be exercised to insure the maximum rate of application with no excess, and leaving no unsightly appearance. Texture of slurry spread by hand shall match that which was applied by machine. The Contractor shall be responsible for the removal of all excess emulsion spread beyond slurry limits, on driveways, sidewalks, gutters, etc.

SMOOTHNESS. The finished surface of slurry seal shall be at least as smooth as the original pavement surface. Any corrugations on the surface creating vibrations noticeable by passengers in an automobile driving over the slurry seal at legal speeds will result in rejection of the slurry seal construction.

REMOVAL AND RESEALING. Any slurry application that has been rejected will be removed by cold planning to the original pavement. A new slurry seal application shall then be placed on the pavement. Any placement of slurry seal rejected shall be removed and replaced with the cost borne by the Contractor.

PROTECTION OF SLURRY. The Contractor shall provide such flagmen and barricades as required to protect the uncured slurry from vehicular traffic. Any damage to the uncured slurry shall be the responsibility of the Contractor.

TRIAL APPLICATION. The Contractor shall place a test stripe of 60 square yards in designated area. The test section shall be placed by using the same equipment and methods as will be used on the job. Slurry mixture placed in test stripe shall conform to job mix with minor variations to, obtain crack fillings, bond to pavement, and desired skid resistant texture. In the event materials do not meet the requirements for fluidity, non-segregation, or surface texture, a new job mix shall be formulated and tested at the Contractor's expense. Work shall not proceed before approval of design mix and acceptance following the placing of a test stripe.

3.02 PROTECTION:

A. Protect the Work of this section until Substantial Completion.

PART 4 – PAYMENT

Payment for **"Weed Abate, Crack Seal, Remove Existing Striping & Pavement Marking and Construct Slurry Seal Type II"** shall be made at the contract unit price per **Square Foot (SF)**, and shall be based on field measurements. The contract unit Price shall include full compensation for all the aforementioned specifications herein including, weed abatement, crack sealing, AC repair, removing existing striping and pavement markers, slurry seal trial section, and all labor, equipment, materials, supplies as necessary to complete the Type II Slurry Seal work as defined herein and as depicted on the plans. No additional compensation will be allowed therefor.

END OF SECTION

SECTION 32 16 00 - CURBS, GUTTERS, SIDEWALKS, RAMPS, AND DRIVEWAYS

PART 1 – GENERAL

1.01 SUMMARY

A. Provisions of Division 32 apply to this section.

B. Section Includes:

1. Construction of Curbs, Curb & Gutters, Curb Ramps, V Gutter, Wheel Stops and Driveways.

C. Other Applicable Sections

See Section 03 30 53 Miscellaneous Concrete for sidewalk, concrete headers and bands, concrete pavers, and other concrete flat work.

1.02 SUBMITTALS

A. Product Data: Manufacturer's technical data for materials and products.

1.03 QUALITY ASSURANCE

A. Comply with Standard Specifications for Public Works Construction, 2018 edition, as a minimum requirement.

1.04 PROJECT CONDITIONS

A. Information on Drawings does not constitute a guarantee of accuracy or uniformity of concrete conditions over the Project site.

PART 2 – PRODUCTS

2.01 CONCRETE MATERIALS:

A. Provide materials conforming to relevant provisions of the Standard Specifications for Public Works Construction, Section 303 – Concrete and Masonry Construction and Section 201-Concrete, Mortar, and Related Material

PART 3 – EXECUTION

3.01 CONSTRUCTION CURBS, GUTTERS, SIEWALKS, RAMPS AND DRIVEWAYS

A. CURB & GUTTERS

The Contractor shall construct curb and gutter conforming to the City of Costa Mesa Standard Drawing No. 312. Six (6) inches of crushed miscellaneous base, (CMB) shall be required under all new curb and gutter, and compacted to 95 percent relative density. All curb & gutter construction shall include the saw cutting and full AC reconstruction of a slot AC pavement section per the plans adjacent to the curb and gutter. All roots and stumps shall be removed to six (6) inches below subgrade. All other removals in order to construct the new improvements shall be considered as included in the Clearing and Grubbing and Demolition LS bid item.

The concrete class shall be 560-C-3250.

The work shall also include removal and replacement of the interfering portions of existing curb drain pipe that lie in the path of the construction to be performed. Existing curb drain pipe shall be replaced with 3" inside diameter ABS Schedule 40 pipe for 6” and 8” curb. The work required includes the cutting and removal of existing pipe, constructing holes in new curbs where applicable, enlarging holes in the existing curb as required, connecting the upper end of the new pipe to the existing pipe and the lower end to the outside of the curb outlet, and related work as required. All work shall conform to the applicable sections of the Standard Specifications unless otherwise directed.

The work shall also include replacement or relocation of any damaged irrigation lines and sprinkler heads to a condition equal to or better than existing that are damaged from the construction work and not included in the Clearing and Grubbing and Demolition LS bid item. The replacement of the grass area shall conform to the Landscape Architecture Section of these specifications.

Weakened plane joints are required every ten (10) feet and felt paper every 40’. Transitional curb and gutter shall be five (5) feet from one type to the other. No construction joints will be permitted.

Additional removal of existing curb and gutter not covered in the Clearing and Grubbing and Demolition LS bid item shall not result in any damage to adjacent sidewalk, driveway approach or other improvements unless indicated on the plans. The top of curb elevations for the proposed curb and gutter shall match the existing top of curb elevations unless otherwise indicated on the plans. Any damage to adjacent improvements will be repaired at the Contractor’s expense.

Where existing red curb is removed and reconstructed, the Contractor shall paint the newly constructed curb (the curb face and top of curb) red. The paint material

shall be waterbase and shall be Pervo Paint, Red Curb Paint #3123 or approved equal. All work shall comply with Sections 59-1 and 59-6 of the Caltrans' Standard Specifications and the painting shall be completed within 48 hours after the new curb and gutter construction. Paint residual shall not remain on sidewalks, gutter plates, or other places beyond the limits of the curb face and top of curb being painted. Contractor shall remove the paint residual as soon as possible after the painting is completed. The Contractor shall notify the ENGINEER at least two (2) working days prior to commencing work. All work must be performed to the satisfaction of the ENGINEER.

Where curb and gutter are being reconstructed, and the adjacent existing sidewalk is to be protected in place, the new curb height shall vary to join the existing sidewalk.

B. CURB & ROLLED CURB

The Contractor shall construct curb and rolled curb conforming to the City of Costa Mesa Standards and the plans. Six (6) inches of crushed miscellaneous base, (CMB) shall be required under all new curb, and compacted to 95 percent relative density. All curb construction shall include the saw cutting and construct of slot pavement adjacent to the curb. All roots and stumps shall be removed to six (6) inches below subgrade. All existing curb and rolled curb removal shall be considered included in the Clearing and Grubbing and Demolition LS bid item.

The concrete class shall be 560-C-3250.

The work shall also include removal and replacement of the interfering portions of existing curb drain pipe that lie in the path of the construction to be performed. Existing curb drain pipe shall be replaced with 3" inside diameter ABS Schedule 40 pipe for 6" and 8" curb. The work required includes the cutting and removal of existing pipe, constructing holes in new curbs where applicable, enlarging holes in the existing curb as required, connecting the upper end of the new pipe to the existing pipe and the lower end to the outside of the curb outlet, and related work as required. All work shall conform to the applicable sections of the Standard Specifications unless otherwise directed.

The work shall also include replacement or relocation of any damaged irrigation lines and sprinkler heads to a condition equal to or better than existing that are damaged from the construction work and not included in the Clearing and Grubbing and Demolition LS bid item. The replacement of the grass area shall conform to the Landscape Architecture Section of these specifications.

Weakened plane joints are required every ten (10) feet and felt paper every 40'. Transitional curb shall be five (5) feet from one type to the other. No construction joints will be permitted.

Saw cutting shall be accomplished by the use of a power driven saw. The depth of the cut shall be deep enough to provide a clean, straight break without loosening, cracking, or damaging adjoining asphalt or concrete. A clean sawcut edge shall be maintained until new concrete curb is constructed.

All necessary sawcutting of existing concrete Curb or any existing improvements shall be to the lines as required by the ENGINEER. Sawcutting shall be included in the unit price and no further compensation shall be made.

It is Contractor's responsibility to protect all existing adjacent features such as landscaping, irrigation system, utility boxes, etc. in place per Section 300-1.2 of the Standard Specifications. All damages to these items shall be fixed to the satisfaction of the ENGINEER without any additional compensation.

C. CURB RAMP

The construction of the concrete sidewalk adjacent to the new curb ramps shall conform to Section 03 30 53 - MISCELLANEOUS CONCRETE of these Specifications.

The curb ramp improvements shall be in conformance with City of Costa Mesa Standard Drawings, SPPWC Standard Drawings and details shown on the project plans, and applicable sections of the GREEN BOOK. 4-inches of Crushed Miscellaneous Base (CMB) material shall be placed under the sidewalk and curb ramp.

Concrete shall be class 520-C-2500 and match the existing concrete sidewalk color.

Crushed Miscellaneous Base (CMB) material and construction shall conform to Subsection 200 and 301 of the GREEN BOOK and as directed by the ENGINEER. The sieve size shall be ¾-inch (fine).

All sprinkler systems encountered and damaged by the Contractor's operations shall be replaced in kind. Compensation for this work shall be included within the Clearing and Grubbing and Demolition LS bid item.

Contractor shall submit a sample of the detectable warning surface to the ENGINEER for approval, prior to start of construction.

1. Construction of Wheelchair Ramps:

The Contractor shall construct new concrete wheelchair ramps, flares, monolithic curbs, and other miscellaneous concrete construction conforming to Section 303-5 of the Standard Specifications and APWA Standard Drawings with lines and grades to meet existing. In order to meet ADA requirements, cross slope of new sidewalk shall be 2%. Four (4) inches of CMB shall be required under all sidewalks and wheelchair ramps. The Contractor may be directed to construct new concrete

walkways or steps in landscaped areas where required.

All pull boxes; meter boxes; and valve covers shall be adjusted to proposed finish grade and approved by the ENGINEER in the field prior to placement of PCC. The adjustment of said facilities shall be considered as included in the item of work requiring the adjustment.

The Contractor shall sawcut and remove existing asphalt concrete or existing concrete sidewalk within construction limits where encountered for constructing new sidewalk shall be considered as covered under the Clearing and Grubbing and Demolition LS bid item. The remaining asphalt concrete or PCC pavement adjacent to new sidewalk shall be protected in-place and intact. Any damage caused by the Contractor shall be replaced at no cost to the City.

The Contractor shall protect all existing drainage pipes and structures and other existing improvements not designated to be removed in-place and intact.

At all times the Contractor shall provide a safe and walkable temporary sidewalk with a minimum width of 36" clearance adjoining excavated areas within parkway limits for wheelchair and pedestrians to travel around construction areas. If such clearance is not possible, barricading, plating, filling, or other measures shall be required.

The Contractor shall complete the required ADA ramp work within each work area stage prior to beginning a new ADA ramp in the subsequent stage unless directed otherwise by the ENGINEER.

The work shall include the relocation of parking signs to a condition equal to or better than existing. It shall also include the construction of the variable height retaining curb at the back of the curb ramp.

Contractor shall install Detectable Warning Surface on ramps per SPPWC Standard Plan No. 111-5, per CBC 11B-705, per Federal ADA and manufacturers requirements, or as directed by the ENGINEER.

Contractor shall submit a sample of the detectable warning surface to the ENGINEER for approval, prior to the start of construction.

2. Unclassified Excavation

Unclassified excavation shall be considered as included in the Clearing and Grubbing bid item and shall consist of all excavation for the construction of sidewalk and wheelchair ramps. The Contractor shall also cut and remove any tree roots encountered within construction limits to at least six (6) inches below the subgrade, and remove any previously removed tree stumps encountered that was not removed as part of the Clearing and Grubbing and Demolition bid item.

Contractor shall protect and support in-place and intact all existing curb drain lines during excavation and construction.

3. Irrigation Lines and Sprinkler Heads

The Contractor shall cut interfering portions of existing irrigation lines and cap all ends for future reconnection.

All landscape and irrigation work required shall be considered as included in the Landscape Architecture Section of these specifications.

The Contractor may salvage and reuse sprinkler heads that are still in reusable and functional condition.

Any damage beyond the construction limit shall be repaired at the Contractor's expense per Section7-9 of the Standard Specifications.

The Contractor shall modify, relocate or replace and/or extend all encountered irrigation lines or sprinkler heads so as to give full coverage to landscape area.

All repair and replacement of the irrigation system shall be completed in accordance with the Landscape Architecture Section of these specifications.

As determined in the field by the ENGINEER, the Contractor may be directed to extend the existing sprinkler system into the landscaped area between curb and sidewalk and other locations as necessary.

4. Sod and Modified Class "A" Topsoil

All sod replacement and topsoil work within the ramp work limits shall be considered as included in the other work items defined within the Landscape Architecture Section of these specifications.

5. Existing Tie-in Grading

Some areas adjoining to new sidewalk will be lower or higher than new sidewalk grade. At these locations, the Contractor shall be required to re-grade the area from the edge of the new sidewalk to meet existing ground. Also, the Contractor shall fill all low areas to meet new or existing grade by using uncontaminated project excavation materials.

6. Miscellaneous Work

The following miscellaneous work shall be included in the scope of work for the bid items stated:

a. Modifying and/or constructing transitional sidewalk to meet the existing improvements.

b. Protecting and supporting all existing improvements, not designated to be removed, adjoining and adjacent new improvements including, but not limited to, walls, fences, brick work, PCC, etc.

c. Providing forms; excavating, backfilling and compacting form areas.

d. Disposing of all excavated and removed materials (including PCC, AC, CMB, CTB, slurry backfill, dirt, ivies, plants, trees, roots, stumps, branches, grass, bricks, fences, woods, etc.) that are not included in the Clearing and Grubbing bid item.

e. Cutting and replanting existing turf to meet sidewalk.

f. Replacing any broken, cracked, or otherwise damaged water meter boxes and lids prior to placement of sidewalk.

D. DRIVEWAYS

The Contractor shall construct driveway approach as shown on the plans or as directed by the ENGINEER. All work shall conform to Sections 303 of the Standard Specifications and the Project Plans, unless otherwise directed.

The Contractor shall construct new concrete driveway approach construction conforming to Section 303-5 of the Standard Specifications and the Project Plans with lines and grades to meet existing.

The Contractor shall sawcut and remove existing asphalt concrete or existing concrete sidewalk and driveway approach within construction limits where encountered for constructing new driveway approach as part of the Clearing and Grubbing and Demolition LS bid item and as shown on the plans. The remaining asphalt concrete or PCC pavement adjacent to new driveway approach shall be protected in- place and intact.

Any damage caused by the Contractor shall be replaced at no cost to the City.

The Contractor shall protect all existing drainage pipes and structures and other existing improvements not designated to be removed in-place and intact.

At all times the Contractor shall provide a safe and walkable temporary sidewalk with a minimum width of 36” clearance adjoining excavated areas within parkway limits for wheelchair and pedestrians to travel around construction areas. If such clearance is not possible, barricading, plating, filling, or other measures shall be required.

Concrete for driveway approach shall be class 560- C-3250

E. CONCRETE WHEEL STOPS

This work shall include, but not necessarily be limited to, all labor, material and equipment required to install the concrete wheel stop and dowels, furnishing, placing, and anchoring precast concrete wheel stops as indicated on the Plans or established by the ENGINEER. The removal of the existing wheel stops shall be considered as included in the Clearing and Grubbing and Demolition bid item.

Precast concrete wheel stops shall be manufactured by professional pavement products or approved equal.

Precast concrete wheel stops shall be located as shown on the Plans, then secured in place with two anchorage pins per wheel stop. Except for the anchorage pins, all reinforcement within the wheel stops will have a minimum 2-inch cover.

F. CONCRETE V GUTTERS

Contractor shall Construct 3' wide concrete V-Gutter per Detail C and at the location depicted on the Plans.

The concrete class shall be 560-C-3250.

3.02 PROTECTION

A. Protect the Work of this section until Substantial Completion.

3.03 CLEANUP

A. Remove rubbish, debris and waste materials and legally dispose of off the Project site.

PART 4 – PAYMENT

A. General

Payment for all work associated with removal of existing improvements in order to construct the new improvements described herein and as shown on the plans shall be considered as included in the Clearing and Grubbing and Demolition LS bid item and no further compensation will be allowed thereof.

Payment for all work associated with the new sidewalk and other miscellaneous concrete works of improvement not mentioned herein shall be considered as included in the bid items as described in Section 03 30 53 - MISCELLANEOUS CONCRETE of these Specifications and no further compensation will be allowed thereof.

B. Bid Item Descriptions

Payment for **"Construct 6" Curb and Gutter Type (C-6") (W=18") Per City of Costa Mesa Std. DWG No. 312"** shall be made at the contract unit price per **Linear Foot (LF)**, and shall be based on field measurements. The contract unit price shall include full compensation for all the aforementioned specifications herein including, forming, supplying, placing, concrete, base, compaction, sub-base preparation, joint material, tie-in, AC slot pavement and base section tie-in, finish work, and all labor, equipment, materials, supplies as necessary to complete the work as defined herein and as depicted on the plans. No additional compensation will be allowed therefor.

Payment for **"Construct 6" Curb Type A1-6(150)"** shall be made at the contract unit price per **Linear Foot (LF)**, and shall be based on field measurements. The contract unit price shall include full compensation for all the aforementioned specifications herein including, forming, supplying, placing, concrete, base, compaction, sub-base preparation, joint material, tie-in, AC slot pavement and base section tie-in (if required), finish work, and all labor, equipment, materials, supplies as necessary to complete the work as defined herein and as depicted on the plans. No additional compensation will be allowed therefor.

Payment for **"Construct ADA Curb Ramp"** shall be made at the contract unit price per **Each (EA)**, and shall be based on the required ramp limits and details necessary to comply with the ADA requirements and as shown on the plans. The Concrete Sidewalk on either side of the ramp tie-in shall be considered as included in the bid items described under Section 03 30 53 - MISCELLANEOUS CONCRETE of these Specifications. The contract unit price shall include full compensation for all the aforementioned specifications herein including, forming, supplying, placing, concrete, base, compaction, sub-base preparation, joint material, tie-in, AC slot pavement and base section tie-in (if required), curb, retaining curb, finish work, truncated domes per CBC 11B-705, and all labor, equipment, materials, supplies as necessary to complete the work as defined herein, as depicted on the plans, and as required to comply with ADA. No additional compensation will be allowed therefor.

Payment for **"Construct Truncated Domes"** shall be made at the contract unit price per **Each (EA)**, and shall be installed in accordance with the Plans and Specifications and shall include, truncated domes per CBC 11B-705, and all labor, equipment, materials, supplies as necessary to complete the work as defined herein, as depicted on the plans, and as required to comply with ADA. No additional compensation will be allowed therefor.

Payment for **"Construct 3' wide Concrete V-Gutter"** shall be made at the contract unit price per **Linear Foot (LF)**, and shall be based on field measurements. The contract unit price shall include full compensation for all the aforementioned specifications herein including, forming, supplying, placing, concrete, base, compaction, sub-base preparation, joint material, tie-in as required, finish work, and

all labor, equipment, materials, supplies as necessary to complete the work as defined herein and as depicted on the plans and shown on Detail C. No additional compensation will be allowed therefor.

Payment for **"Furnish and Install Concrete Wheel Stop"** shall be made at the contract unit price per **Each (EA)** as installed per these specifications. The contract unit price shall include full compensation for all the aforementioned specifications herein including, furnishing and installing the concrete wheel stops, rebar dowels, and all labor, equipment, materials, supplies as necessary to complete the work as defined herein and as depicted on the plans and shown on Detail B. No additional compensation will be allowed therefor.

Payment for **"Construct Driveway Approach"** shall be made at the contract unit price per **Each (EA)** as constructed per these specifications. The contract unit price shall include full compensation for all the aforementioned specifications herein including, forming, supplying, placing, concrete, base, compaction, sub-base preparation, joint material, tie-in as required, finish work, and all labor, equipment, materials, supplies as necessary to complete the work as defined herein and as depicted on the plans. No additional compensation will be allowed therefor.

Payment for **"Construct 6" thick fill-in concrete over 6" CMB"** shall be made at the contract unit price per **Square Foot (SF)** as constructed per these specifications. The contract unit price shall include full compensation for all the aforementioned specifications herein including, forming, supplying, placing, concrete, 6" CMB, compaction, sub-base preparation, tie-in as required, finish work, and all labor, equipment, materials, supplies as necessary to complete the work as defined herein and as depicted on the plans. No additional compensation will be allowed therefor.

END OF SECTION

SECTION 32 12 16 - ASPHALT PAVING

PART 1 – GENERAL

1.01 SUMMARY

A. Provisions of Division 32 apply to this section.

B. Section Includes:

1. Paving for parking areas as indicated.

1.02 SUBMITTALS:

A. Product Data: Manufacturer's technical data for materials and products.

1.03 QUALITY ASSURANCE:

A. Comply with Standard Specifications for Public Works Construction, 2018 edition, as a minimum requirement.

1.04 PROJECT CONDITIONS:

A. Information on Drawings or in soils report does not constitute a guarantee of accuracy or uniformity of soil conditions over the Project site.

PART 2 – PRODUCTS

2.01 BITUMINOUS MATERIALS:

A. Provide materials of the class, grade, or type indicated on the Drawings, conforming to relevant provisions of the Standard Specifications for Public Works Construction edition 2021, Section 203 - Bituminous Materials, Section 302 – Roadway Surfacing and Section 400 – Alternate Rock Products, Asphalt Concrete, Portland Cement Concrete and Untreated Base Material.

B. Asphalt Concrete Surface Course shall be C2-PG-64-10.

2.02 BASE MATERIALS

A. The base material for the AC pavement areas shall be Crushed Miscellaneous Base (CMB) and shall comply with Section 200-2.4.1 of the Standard Specifications.

B. CMB shall be ¾" course graded

PART 3 – EXECUTION

3.01 CONSTRUCTION OF ASPHALT CONCRETE PAVEMENT:

A. Pavement cold milling and asphalt concrete paving of the class, grade, or type indicated on the Drawings, shall conform to all relevant provisions of the Standard Specifications for Public Works Construction, Section 302 – Roadway Surfacing and Section 400 – Alternate Rock Products, Asphalt Concrete, Portland Cement Concrete and Untreated Base Material.

B. Thickness of Surfacing: Unless otherwise indicated on Drawings or specified, install bituminous surfacing to a compacted thickness of 5 inches, and as indicated on the plans. Cold milling of pavement, where required, shall conform to section 302-1 of the Standard Specifications for Public Works Construction.

C. Asphalt Concrete for slot patching adjacent to PCC improvements shall be C2-PG-64-10 and shall be constructed for the full depth of the slot patch excavation. Slot patch shall be a minimum of 2 foot wide.

D. Asphalt concrete paving for trench repair shall conform to the Trench and Bedding Section detail as shown on the drawings.

E. Surfaces of walls, concrete, masonry, or existing bituminous surfacing indicated to be in direct contact with installed bituminous surfacing shall be cleaned, dried and uniformly coated with an asphaltic emulsion film.

F. Provide adequate protection for concrete, planting areas, and other finish Work adjacent to areas indicated to receive bituminous surfacing.

G. Placing:

1. Do not install bituminous surfacing when atmospheric temperature is below 40 °F; or when fog or other unsuitable weather conditions are present. Temperature of mixture at time of installation shall not be lower than 260 °F in warm weather or higher than 320 °F in cold weather.

2. Where 2-inch or 3-inch thick surfacing is indicated or specified, install surfacing in one course. Where surfacing is indicated or specified 4 inches or more in thickness, except for thickened edges, install bituminous surfacing in courses of approximately equal thickness, each course not exceeding 2-1/2 inches in thickness unless otherwise required by the ENGINEER.

H. Stakes or Screeds: Provide grade or screed stakes spaced not more than 15 feet apart in flow lines with grades of less than one percent. Continuous screeds may be provided instead of stakes.

I. Spreading: Install bituminous surfacing in a manner to cause least possible handling of mixture. In open areas and wherever practicable, install by mechanical means with a self-propelled mechanical spreader. In confined or restricted areas, install mixture with hot shovels and rakes, and smooth with lutes.

J. Provide vertical joints between successive runs. Install joints true to line, grade, and cross section. Lapped joints are not permitted.

K. Rolling:

1. Finish roll with a self-propelled tandem roller weighing at least 8 tons. Break down roll with a self-propelled roller weighing between 1-1/2 tons and 8 tons.

2. Roll in a manner that preserves flow lines and the established finished grades. Break down roll in areas adjacent to flow lines parallel to flow lines. Break down roll after bituminous surfacing is installed without shoving or cracking of mixture under roller. Continue finish rolling until surfacing is unyielding, true to grade, and meets requirements for specified smoothness. Areas inaccessible to finish roller may be finish rolled with breakdown roller or tamped with hot tamping irons and smoothed with hot smoothing irons or hand roller.

3. Where bituminous surfacing abuts concrete, masonry, walks or paving, tamp joint smooth, if necessary, as described above to obtain a uniformly even joint, true to line and grade. Tamp and smooth to properly compact.

4. Compacted bituminous surfacing shall be provided with a bulk specific gravity of at least 2.31 when tested in accordance with ASTM D 1188.

3.02 TOLERANCE

A. Smoothness: Surface of bituminous surfacing after rolling, shall be even, smooth and uniform in texture with no voids or rock pockets, free of roller marks or other irregularities, and not varying by more than 0.03 foot, except at local depressions or raised areas as indicated, when a 10 foot straightedge is placed on surface.

B. Grade: Finished grade shall not vary more than 0.02 foot above or below required grade. Variations within prescribed tolerance shall be compensating so that average grade and cross-section are provided.

3.03 TESTING

A. After first coat of surface seal has been installed and after a 24-hour period, the flood test shall be completed of the bituminous surfacing in presence of the IOR. Repair areas of standing water or puddles and flood test locally; install surface seal and retest as necessary.

3.04 PROTECTION

A. Protect the Work of this section until Substantial Completion.

3.05 CLEANUP

A. Remove rubbish, debris and waste materials and legally dispose of off the Project site.

PART 4 – PAYMENT

Payment for **"Construct 5" thick AC Pavement Over Compacted 8" thick CMB"** shall be made at the contract unit price per **Square Foot (SF)**, and shall be based on field measurements. The cost associated with removing and disposing of the existing AC pavement section in order to construct the new AC pavement and CMB section shall be considered as included in the Clearing and Grubbing and Demolition LS bid item. The contract unit price shall include full compensation for all the aforementioned specifications herein including, furnishing, placing, and compacting AC, Tack Coat, 8" CMB, CMB compaction, sub-base preparation and compaction, AC tie-in to existing AC as required, and all labor, equipment, materials, supplies as necessary to complete the work as defined herein and as depicted on the plans. No additional compensation will be allowed therefor

END OF SECTION

SECTIONS 321723, 321723.13, 321723.23 & 321723.33 - PAVING SPECIALITIES

PART 1 – GENERAL

1.01 SUMMARY:

A. Provisions of the General and Supplementary Conditions and Division 32 apply to this section.

B. Section Includes:

1. Striping, Signing, Markings and Pavement Legends

1.02 QUALITY ASSURANCE

A. Comply with Standard Specifications for Public Works Construction, 2018 edition, as a minimum requirement.

PART 2 - PRODUCTS (NOT USED)

PART 3 – EXECUTION

3.01 STRIPING, SIGNING, MARKINGS & PAVEMENT LEGENDS

GENERAL - The Contractor will be responsible for inventorying all existing striping that will be affected by the work. Existing striping and marking shall be replaced in the existing locations unless otherwise direct by the ENGINEER or as shown in the project plans. The Contractor's inventory shall be presented to the ENGINEER upon request.

All handicap signage should be approved by the ENGINEER before installed.

a. Remove Existing Pavement Markings and Pavement Markers

All raised pavement markers and existing thermoplastic markings shall be removed from the existing pavement prior to placement of new pavement surface coat.

Nothing in these Special Provisions shall relieve the Contractor from the responsibilities established in Subsection 7-10, "Public Convenience and Safety", of the Standard Specifications for Public Works Construction.

b. Temporary Pavement Markings

Temporary pavement markings shall be placed on the parking lot following the final application of the pavement surface coat. The first coat of painted striping and markings shall be placed within 5 working days after final placement of the surface coat.

c. Pavement Striping and Raised Reflective Pavement Markers

The Contractor will furnish and apply traffic stripes and pavement markings to match existing as directed by the ENGINEER. Placement of striping and markings shall conform to the requirements of Section 84 and 85 of the Caltrans Standard Specifications, latest edition, the County of Orange Standard Plans and these Special Provisions.

Painting shall conform to the last two paragraphs of Section 59-1.03, "Application," and Section 59-1.04, "Thinning Paint."

Paint for Traffic Striping and pavement markings shall be low volatile organic compound (VOC) beaded paint.

Paragraphs 1 and 2 of Subsection 84-1.01, "Description," are amended to read: “This work shall consist of applying painted traffic lines and pavement markings at the locations and in accordance with the details shown on the plans or designated by the ENGINEER, and as specified in these Specifications and the Special Provisions.”

The kind of material or paint to be applied will be as designated in the Caltrans Standard Specifications, specified in the Special Provisions, or shown on the plans.

Paragraph 1 of Subsection 84-1.02, "Control of Alignment and Layout," is amended to read: “The Contractor shall perform all layout, alignment and spotting, which will consist of existing strips or control points spaced at 200 feet on tangents and 50 feet on curves and tapers.”

The first sentence of paragraph 4 of Subsection 84-1.03 "Tolerances and Appearance," is amended to read: “Drips, overspray, improper markings and paint material tracked by traffic shall be immediately removed from the pavement surface by methods approved by the ENGINEER.”

Paragraph 2 of Subsection 84-1.04 “Protection from Damage,” is amended to read: “Newly placed traffic stripes and pavement markings shall be protected from damage by public traffic or other causes until the paint is thoroughly dry.

The first sentence of paragraph 1 of Subsection 84-33.02 “Materials,” is amended to read: “Paint and glass beads for traffic stripes and pavement markings will be furnished by the contractor, including paint for cat tracks and dribble lines.

The second sentence of paragraph 2 of Subsection 84-3.03 “Mixing,” is amended to read: “Such mixing shall be at the Contractor’s expense.”

Pavement markers shall conform to the provisions in Section 85, “Pavement Markers,” of the Caltrans Standard Specifications and these “Special Provisions,” and as approved by the ENGINEER.

RPM's shall be placed as part of the second coat of striping. A blue RPM shall be placed in the street at each fire hydrant location per the direction of the ENGINEER

c. Permanent signage

Permanent signage shall include the installation of W2-6 sign and post and the parking signs per CBC 11B-705 per plans.

3.02 CLEANUP:

A. Remove rubbish, debris and waste materials and legally dispose of off the Project site.

PART 4 – PAYMENT

Payment for **"Striping, Signage, Markings and Pavement Markers"** shall be made at the contract unit price per **Lump Sum (LS)**, for various striping, markings, raised pavement markers (RPMs), W2-6 permanent signage, and shall include full compensation for furnishing all labor and materials including temporary pavement striping, adhesives, glass beads and paint, tools, equipment, stencils and incidentals, and pavement markings complete in place, including removal of existing traffic striping and removal of existing pavement markings and RPMs; and for doing the work involved in pavement markings and locating and recording locations of existing legends to the satisfaction of the ENGINEER and no additional compensation will be allowed.

Payment for **"Furnish and Install Parking Sign"** shall be made at the contract unit price per **Each (EA)**, for installing the required signage for the ADA parking spaces, and shall include full compensation for furnishing all labor and materials and completing the work in accordance with the ADA requirements and CBC as shown on the plans.

END OF SECTION

SECTION 33 01 30.86 – UTILITIES

PART 1 – GENERAL

1.01 SUMMARY

A. Provisions of Division 33 apply to this section.

B. Provisions of Section 402 of these Special Provisions apply to the section.

C. Section Includes:

1. Adjust to grade sewer manhole.

1.02 SUBMITTALS:

A. Product Data: Manufacturer's technical data for materials and products.

1.03 QUALITY ASSURANCE:

A. Comply with Standard Specifications for Public Works Construction, 2018 edition, as a minimum requirement and Section 402 of these General Provisions.

1.04 PROJECT CONDITIONS:

A. Information on Drawings does not constitute a guarantee of accuracy or uniformity of concrete conditions over the Project site.

PART 2 – PRODUCTS

2.01 CONCRETE AND MANHOLE MATERIALS:

A. Provide materials conforming to relevant provisions of the Standard Specifications for Public Works Construction edition 2021, Section 303 – Concrete and Masonry Construction and Section 201-Concrete, Mortar, and Related Material and section 301-1.6

PART 3 – EXECUTION

3.01 ADJUST TO GRADE SEWER MANHOLE:

A. Contractor shall adjust existing sewer manholes to grade in conformance to the provisions of section 301-1.6 of the Standard Specifications, and the following additions and revisions, where shown on the plans or as required by the ENGINEER.

Adjustment to grade of manholes shall conform to the provisions of the City of Costa Mesa Standard Plans and Costa Mesa Sanitary District Drawing No. S-105-A.

Work shall include the removal or furnishing of grade rings as necessary to adjust the manhole to grade.

Sewer manholes shall be protected in place and shall be accessible at all times during construction.

Contractor shall notify the City forty-eight hours prior to beginning work. All work adjusting sewer manholes and covers to grade shall be inspected and approved by the City.

The Contractor shall notify affected utility owners at least 5 working days in advance of the need to commence work required prior to paving operations and again for work required after paving operations. The Contractor shall mark locations of utility vaults where utility companies specifically state adjustments shall be made after paving. If it is found to impractical for the utility owner to complete remodeling or adjustment to structures, as evaluated by the ENGINEER, then the Contractor shall be absolved of further responsibility in connection therewith, and the structure shall be adjusted to grade by the utility owner under permit or ordinance procedure established by the CITY for utility cuts in pavement.

Contractor shall Adjust Sewer Cleanout to match finish surface elevation and slope of the new pavement as shown on the Plans or encountered within the construction area. The Contractor shall furnish and install sleeves where needed, and include in the cost of paving. Sewer Cleanouts shall be protected in place and shall be accessible at all times during construction.

3.02 PROTECTION:

A. Protect the Work of this section until Substantial Completion.

3.03 CLEANUP:

A. Remove rubbish, debris and waste materials and legally dispose of off the Project site.

PART 4 – PAYMENT

Payment for **"Adjust to Grade Existing Sewer Manhole"** shall be made at the contract unit price per **Each (EA),** and shall be considered full compensation for the preceding requirements and shall include providing all labor, tools, equipment and materials necessary for doing the work in compliance with the City standards. No other compensation will be allowed.

Payment for **"Adjust to Grade Existing Sewer Cleanout"** shall be made at the contract unit price per **Each (EA),** and shall be considered full compensation for the preceding requirements and shall include providing all labor, tools, equipment and materials necessary for doing the work in compliance with the City standards. No other compensation will be allowed.

Payment for **"Utility Potholing and GPR"** shall be made at the contract unit price per **LUMP SUM (LS),** and shall be considered full compensation for the work as defined within Section 402 of these Special Provisions and shall include providing all labor, tools, equipment and materials, pothole plan, pothole excavation, backfill, compaction, base and AC material, GPR, pothole report, and all other necessary materials for doing the work in compliance with the City standards and Section 402 of the Special Provisions. No other compensation will be allowed.

END OF SECTION

SECTION 03 30 53 - MISCELLANEOUS CONCRETE

PART 1: GENERAL

1.01 DESCRIPTION

A. The General Provisions shall apply to all miscellaneous concrete work operations. Provide labor, materials, tools, transportation, equipment and incidentals necessary to perform work as indicated on the Plans and as herein specified.

B. Related Sections.

Section 03 10 00 - Concrete Formwork
Section 12 93 00 - Site Furnishings and Miscellaneous Materials
Section 32 84 00 - Irrigation

C. The Standard Specifications for Public Works Construction, "Greenbook", 2018 edition, is referenced as if herein contained and the Contractor shall keep a copy at the project site. These Specifications shall supersede conflicts with information given in the "Greenbook", unless otherwise determined by the Engineer.

D. References
Refer to Geotechnical Investigation Document(s)
Refer to American Concrete Institute
Refer to State of California Department of Transportation (Cal Trans) Standard Specifications (DTSS)
Refer to applicable ASTM Specifications

E. Definitions.

1. City: City of Costa Mesa

2. Engineer: City Engineer, or the City Engineer's designated representative.

3. ASTM: American Society of Testing Materials

1.02 QUALITY ASSURANCE

A. Comply with all applicable local, state, federal requirements regarding materials, methods of work, and disposal of excess and waste materials.

B. Manufacturer's directions, specifications and detailed drawings will be followed in all cases where articles used furnish directions covering points not delineated on the Plans or Specifications.

C. The work included in this section will be done to the satisfaction of the Engineer. The decision by the Engineer as to the true construction meaning of the Plans and Specifications will be final.

D. Material quality standards and testing procedures shall be in accordance with all ASTM standards and testing procedures and shall be the latest requirements.

1. All tests shall be made by a testing laboratory acceptable and approved by the Engineer.

2. One mechanical analysis and one decantation test shall be made of the sand and coarse aggregate proposed for the work.

3. Concrete specimens shall be taken when directed by the Engineer. At least one pair of specimens shall be taken from each pour of concrete or from each one-hundred cubic yards of concrete or major fraction thereof. One cylinder from each pair shall be tested at seven (7) days. One from each pair shall be tested at twenty-eight (28) days. Concrete for specimens shall be taken from place of deposit. Specimens shall be prepared and tested in accordance with the latest ASTM specifications.

4. Additional tests shall be made when and as directed by the Engineer. Cost of additional tests shall be borne by Contractor.

5. Should concrete strengths not attain the minimum specified at twenty-eight (28) days, the area of substandard work shall be examined by the Engineer. The defective concrete shall be removed between expansion joint and replaced or the work shall be strengthened in a manner as directed by the Engineer.

6. The cost of all examination and testing of defective material, as well as corrective measures, shall be borne by the Contractor.

E. Reinforcing Steel: All steel shall be Grade 60 billet steel conforming to ASTM A-615.

1.03 SUBMITTALS:

A. Shop Drawings: Submit for concrete slabs showing dimensioned locations and types of construction and expansion joints.

B. Samples: Prepare minimum 4-foot square samples of each required slab finish excluding only monolithic trowel and float finishes. Include a transverse expansion joint, scoring, and edging.

1.04 JOB CONDITIONS

The Contractor shall be responsible for the coordination and proper relation of his work to existing site improvements and utilities and to the work of all trades. The Contractor shall visit the site and be thoroughly familiar with all details of the work and working conditions and verify all dimensions in the field. Protect all existing improvements to remain on and adjacent to the project site during construction. Repair at its sole cost, all damages resulting from its operations or negligence.

PART 2: PRODUCTS

2.01 MATERIALS

A. Concrete flatwork and headers shall have a minimum compressive strength at 28 days of 2,500 psi.

B. Concrete walls have a minimum compressive strength at 28 days of 3,000 psi.

C. Portland Cement shall be Type V, low alkali, and shall conform to ASTM C150.

D. Concrete aggregate shall conform to ASTM C33. All aggregate shall be well graded and selected from a source that has a proven history of non-reactivity. Maximum aggregate size shall be 3/4 inch.

E. Fine aggregate shall consist of washed natural sand having hard, strong and durable particles and which does not contain more than 2% by weight of clay, loam, shale, alkali, organic matter or other deleterious substances.

F. Coarse aggregate shall consist of clean, hard, fine grained, sound crushed rock or gravel, which does not contain more than 5% by weight of flat, chip-like, thin, elongated, friable or laminated pieces. Any piece having a major dimension in excess of two and one-half (2 1/2) times the average thickness and which will adversely affect the strength of the concrete shall not be used.

G. Water shall be clean and free from deleterious amounts of acids, alkalis, and organic materials.

H. Each component of the concrete mix shall be supplied from the same source for the entire project.

2.02 PROPORTIONS AND MIXING

A. The concrete shall be composed of cement, sand and coarse aggregate in the proportions as determined by the testing laboratory. Cost of mix design shall be borne by Contractor.

B. Slump: Adjust quantity of water so concrete at time of placing does not exceed the following slumps when tested according to ASTM C143. Use the minimum water necessary for workability required by part of structure being cast.

Part of Structure	**Maximum Slump Inches**	**Maximum Water-Cement Ratio**
Footings, foundation walls, and mass concrete, not reinforced	4	0.6
Slabs on grade, reinforced and non-reinforced	3	0.45
Reinforced concrete over 8” thick	4	0.5
Reinforced concrete 8” or less thick	4-1/2	0.5
All other concrete	4	0.5

C. The concrete shall be mixed as follows:

1. Each transit mixer shall be equipped with automatic devices for recording the number of revolutions of the drum prior to completing the mixing, with peripheral drum speed of approximately 200 feet per minute.

2. Transit-mix concrete shall be mixed for a period of not less than ten (10) minutes. At least three (3) minutes of the mixing period shall be immediately prior to discharging at the job.

3. Transit-mix concrete shall not be delivered to the work with the total specified amount of water incorporated therein. Two (2) gallons of water per cubic yard shall be withheld, and may be incorporated in the mix, before the concrete is discharged from the mixer truck.

4. The concrete, at time of placing, shall be in such condition that it can be properly placed.

2.03 MISCELLANEOUS CONCRETE

A. Concrete Footings

B. Concrete Flatwork with Topcast Top-Surface Retarder Finish

C. Concrete Flatwork with Heavy Sand Blast Finish

D. Concrete Header (10” wide)

E. Concrete Header (16” wide)

PART 3: EXECUTION

3.01 PLACING CONCRETE

A. Before the placing of any concrete, all forms shall be thoroughly cleaned and wet. Concrete shall be poured into forms immediately after it is mixed, and so that no separation will occur. No concrete which has stood for more than fifteen (15) minutes after leaving the mixer shall be used. Concrete shall be rejected if not placed in final position within ninety (90) minutes after water is first added to the batch.

B. Maximum free drop of concrete shall not be more than 5’-0”. Use tremies in deep sections.

C. The location of all stoppages shall be approved by the Engineer.

D. The flow surface of the freshly poured concrete shall be level whenever any pour is stopped and tight dams shall be built as necessary to accomplish this result. Construction joints shall be made only when unavoidable, and then only at the point determined by the Engineer. Details of such joints shall be as directed by the Engineer.

E. Before the placing of any concrete, the surface of the previously poured concrete shall be wet.

F. Install concrete and cement finish work true to lines, dimensions, levels, and finish with smooth unblemished surfaces for exterior finishes specified on Plans.

G. Remove and replace defective concrete or cement work with new materials. Permission to patch any defective area shall not be a waiver of the right of the City to require complete removal of defective work if patching does not restore quality and appearance of work.

H. No advertising impression, stamp, or mark of any description will be permitted on surface of concrete or cement finish.

3.02 CEMENT FINISH

A. Compact and tamp concrete as specified to bring 3/8" of mortar to surface, wood float to straight edges and screeds, and apply following finishes. Do not use steel or plastic floats of any kind for initial floating operations. Unless otherwise specified, do not apply finishes until surface water disappears and surface is sufficiently hardened. Remove any bleed water and laitance as it appears.

B. The color for concrete paving shall be as shown on the plans.

3.03 EXPANSION AND CONTROL JOINTS

A. Expansion joint material shall be as noted on the Plans.

B. Locate expansion and control joints to least impair the strength and appearance of the structure. In no case place an intersecting construction joint in such a way that two intersecting walks are separated by a construction or control joint at the point of intersection. Transition curves shall be part of a continuous pour of the intersection slab.

1. Expansion joints shall be a maximum of twenty feet (20') apart, with control joints a maximum of ten feet (10') apart. Exception to this are specialty work joints which will be laid out as shown on the Plans.

2. The Contractor shall obtain the Engineer's approval of layout showing proposed location of joints before pouring concrete.

C. Caulking of expansion joints where called for on the Plans shall be done with a non-tracking, multi-part flow type, self-leveling, polyurethane sealant manufactured by Chem-Seat, Grace, 3-H or approved equivalent.

1. Color shall match the color of the concrete where the expansion joint occurs unless shown otherwise on the plans.

2. Caulking shall be done by an experienced applicator in a workmanlike manner, in smooth straight runs, after thoroughly cleaning and priming joints.

3. All work shall be done in strict accordance with manufacturer's printed recommendations. Do not permit traffic to travel over seated joints until sealer has fully cured.

4. A light dusting of fine sand will be required over wet sealer. Contractor to discuss option with City Engineer.

3.04 QUALITY CONTROL

A. Smoothness tolerance exterior cement finish surfaces shall be of such smoothness and evenness that they shall contact the entire length of a 10’ straight edge laid in any direction, with an allowable tolerance of 1/8 inch. Any operations necessary to achieve this result shall be performed by the Contractor at no additional cost to the City.

B. Inspections will be provided as necessary. Call for inspection two (2) working days prior to need.

C. The Contractor shall call for inspection during specific phases of construction. They shall include:

1. All form work prior to pouring.

2. All footings prior to pouring.

3. Subgrade prior to pouring.

4. Drag form approval.

D. Contractor shall notify the Engineer twenty-four (24) hours prior to pouring any concrete.

E. Any work covered prior to inspection shall be opened to view by the Contractor at his expense.

3.05 TESTING

A. Compression tests of concrete shall be made as required by the Building Code except that compression tests of any grade of concrete shall be made whenever the quantity of that grade used in the project exceeds 25 cubic yards. At least two identical cylinders of each grade of concrete shall be taken of each 100 cubic yards of concrete or fraction thereof placed in the work. The cylinders shall be tested in a testing laboratory and test reports submitted to the City.

B. Storage of test cylinders on the site and after delivery to the testing shall be in accordance with ASTM Designation C31.

1. Should the strength by test fail, the mix shall be adjusted so that the resulting concrete shall comply with the minimum requirements, and all additional expense resulting from such adjustment shall be borne by the Contractor.

2. Should the strength of any grade by test fall below minimum, concrete from the defective pours which is in place may be tested by the core method. If such tests show the concrete to be defective, the concrete shall be removed and replaced or adequately strengthened as required under the governing Code. All expenses involved shall be borne by the Contractor.

PART 4: PAYMENT

4.01 CONCRETE FOOTINGS

Payment for concrete footings for various walls, planters, and site furnishings will be considered as included in other items of work and no additional payment will be made therefore.

4.02 CONCRETE FLATWORK WITH TOPCAST TOP-SURFACE RETARDER FINISH

Payment for **"Paving 1a: Concrete Flatwork with Topcast Top-Surface Retarder Finish"** will be made at the contract unit price per **Square Foot (SF)** as set forth in the bid schedule and shall include full compensation for all labor, materials, tools, equipment, and incidentals for doing all work involved to complete in place.

4.03 CONCRETE FLATWORK WITH HEAVY SAND BLAST FINISH

Payment for **"Paving 1c: Concrete Flatwork Heavy Sand Blast Finish"** will be made at the contract unit price per **Square Foot (SF)** as set forth in the bid schedule and shall include full compensation for all labor, materials, tools, equipment, and incidentals for doing all work involved to complete in place.

4.04 CONCRETE HEADER (10" WIDE)

Payment for **"Concrete Header (10" wide)"** will be made at the contract unit price per **Linear Foot (LF)**, as set forth in the bid schedule and shall include full compensation for all labor, materials, tools, equipment, and incidentals for doing all work involved to complete in place.

4.05 CONCRETE BAND (16" WIDE)

Payment for **"Concrete Band (16" wide)"** will be made at the contract unit price per **Linear Foot (LF)**, as set forth in the bid schedule and shall include full compensation for all labor, materials, tools, equipment, and incidentals for doing all work involved to complete in place.

END OF SECTION

SECTION 04 20 00 - CONCRETE MASONRY UNITS

PART 1: GENERAL

1.01 SECTION INCLUDES

A. Concrete masonry units (CMU).

B. Reinforcement, anchorage, and accessories.

1.02 RELATED SECTIONS

A. Section 03 10 00 - Concrete Formwork

B. Section 03 30 53 - Miscellaneous Concrete

C. Section 12 93 00 - Site Furnishings

1.03 REFERENCES

A. ACI 530 - Building Code Requirements for Masonry Structures.

B. ACI 530.1 - Specifications For Masonry Structures.

C. ASTM A 82 - Cold-Drawn Steel Wire for Concrete Reinforcement.

D. ASTM A 123 - Zinc (Hot-Dipped Galvanized) Coatings on Iron and Steel Products.

E. ASTM A 167 - Stainless and Heat-Resisting Chromium-Nickel Steel Plate.

F. ASTM A 525 - Steel Sheet, Zinc Coated, (Galvanized) by the Hot-Dip Process.

G. ASTM A 580 - Stainless and Heat-Resisting Steel Wire.

H. ASTM A 615 - Deformed and Plain Billet Steel Bars for Concrete Reinforcement.

I. ASTM C 55 - Concrete Building Brick.

J. ASTM C 90 - Load-Bearing Concrete Masonry Units.

K. ASTM C 652 - Hollow Brick (Hollow Masonry Units Made From Clay or Shale).

L. IMIAC - International Masonry Industry All-Weather Council: Recommended Practices and Guide Specification for Cold Weather Masonry Construction.

M. UL - Fire Resistance Directory.

1.04 SUBMITTALS

A. Submit under provisions of City specifications.

B. Shop Drawings: Indicate bars sizes, spacings, locations, reinforcement quantities, bending and cutting schedules, supporting and spacing devices for reinforcement and accessories.

C. Product Data: Provide data for masonry units.

D. Samples: Submit CMU samples to illustrate size, color, texture and extremes of color range.

E. Manufacturer's Certificate: Certify that Products meet or exceed specified requirements.

1.05 QUALITY ASSURANCE

A. Perform Work in accordance with the current edition of the California Building Code.

B. Mortar and grout mix design:

1. The Contractor shall employ and pay for, an independent testing laboratory acceptable to the Engineer to design the mortar and grout mixes required.

2. The mixes shall be designed by the testing laboratory to produce mortar and grout of the strengths shown on the Drawings. Refer herein for tests to be used in determining masonry strengths.

1.06 QUALIFICATIONS

A. Manufacturer: Company specializing in manufacturing the Products specified in this section with minimum 5 years experience.

1.07 REGULATORY REQUIREMENTS

A. Conform to applicable code for masonry construction.

PART 2: PRODUCTS

2.01 MATERIALS

A. CMU: Size and Finish noted in detail

C. Portland cement: ASTM C 150, Type I, II or III.

D. Lime: ASTM C 207, Type S.

E. Aggregates:

1. For grout: ASTM C 404. Modify coarse aggregate grading requirements so that not more than 5% pass a No. 8 sieve and 100% passes a 3/8 in. sieve.

2. For mortar: ASTM C 144.

F. Mortar coloring pigments: Chemically inert, color-fast, finely ground limeproof pigment by LM Scofield & Co., or equal, of the color selected to match Engineer approved sample.

G. Admixture for grout: Sika Grout-Aid by the Sika Corp. or equal.

H. Water: Potable and fresh.

I. Reinforcing steel: ASTM A 615, grade shown.

J. Miscellaneous materials: As hereinafter specified and as necessary to complete this work.

2.02 MORTAR AND GROUT MIXING

A. Mix in the proportions designed by testing laboratory.

B. Use admixtures according to their manufacturer's printed instructions. Secure manufacturer or distributor initial supervision by a qualified field representative to assure proper use of admixture.

C. Mix by placing 1/2 of water and sand in operating mixer. Then add cement, lime, admixture and the remainder of sand and water. After all ingredients are in the mixer, mix mechanically for not less than three minutes. Do not hand-mix ingredients.

D. Use grout for placing of consistency as fluid as possible for placing without segregation of constituent parts.

E. Mortar may be retempered with water as required to maintain high plasticity.

F. Retemper on mortar boards only by adding water within a basin formed with the mortar and rework the mortar into the water.

G. Discard mortar and grout which are unused after 1-1/2 hour from initial mixing time.

PART 3: EXECUTION

3.01 SHORES AND CENTERING

A. Design, erect, support, brace and maintain shoring and centering for temporary support of cobble elements.

B. Construct true to required shape, size and form, well braced and made rigid in all parts and capable of supporting and sustaining the loads to which they are subjected.

C. Leave shores and centering in place until cobble can safely carry its own weight and the added loads of construction.

D. Brace Pilaster adequately to withstand all forces they will be subjected to during construction. Walls are not designed to be self-supporting for lateral loads until attached to floor and roof elements.

3.02 WORKMANSHIP

A. Erect pilaster plumb, square, straight and true to indicate lines, position and dimensions, in level courses with joints properly aligned.

B. Use sound, dry, clean cobble units free from cracks when placed in the structure.

C. If it is necessary to move a unit after it as been once set in place, remove the unit from the wall, clean and set in fresh mortar.

D. Do not exceed the tolerances contained in ACI 117 for completed work.

3.03 REINFORCEMENT

Embed reinforcement completely in grout with minimum coverage specified below.

3.04 BONDING

A. For bonding the cobble to the foundation, clean top surface of concrete foundation, remove laitance and expose aggregates before starting masonry construction.

B. Lay-up sides in straight uniform courses.

C. Corners shall have a standard bond by overlapping units and grouting solid.

3.05 JOINTS

A. Lay the starting joint on foundations with full mortar coverage on the bed joint. Keep area where grout occurs free from mortar so that grout will contact the foundation.

B. Mortar surfaces between cobbles shall be smooth and uniform cobble to produce a dense, slightly concave surface well bonded to the cobble on each side where exposed in the Work.

C. Perform tooling when mortar is partially set but still sufficiently plastic to bond. Use a tool which compacts the mortar, pressing excess mortar out of joint rather than dragging it out.

D. Rake out joints which are not right at the time of tooling, point and then tool.

E. Set capping units and bearing plates in a full bed of mortar.

F. Do not wet the cobbles units except that in very dry weather the contact surfaces of the units shall be moistened immediately before laying.

3.06 GROUTING

A. Keep mortar droppings out of or remove from the grout space before grouting.

B. Perform grouting from the inside of the cobble. Vibrate grout after initial absorption of water, but before plasticity is lost, to encase steel and to insure contact. Encase reinforcement in minimum of 1/2 in. of grout between cobble and reinforcement.

3.07 FIELD QUALITY CONTROL

A. The Owner's Testing Agency will test mortar and grout as required by governing [CAC] [Los Angeles Building Code].

B. The Testing Agency shall make the following tests in accord with these Specifications and the requirements of the [Los Angeles Building Code] [CAC]. The minimum acceptable test results are listed below.

C. At the beginning of masonry work, at least 2 test samples of mortar grout shall be taken and prepared for each 50 cu. yds. or fractional part hereof, and continuously stored in most air until tested. The compressive strengths shall meet the minimum

strengths specified. Perform tests in compliance with the following:

D. Compression test strengths:

1. Mortar compression tests: On 2 in. x 2 in. cubes tested in compliance with ASTM C 109.

   a. 7 day: 1800 psi.

   b. 28 day: 3000 psi.

2. Grout compression tests: On cylinders made and cured in compliance with ASTM C 31. Compressive strength shall be determined in compliance with ASTM C 39.

   a. 7 day: 2000 psi.

   b. 28 day: 3300 psi.

E. Additional samples shall be taken whenever any change in materials or job conditions occurs or whenever, in the judgment of the Engineer, such tests are necessary to determine the quality of the material and installed work.

F. In making mortar test specimens, the mortar shall be taken from the unit soon after spreading. After molding, the molds shall be carefully protected by a covering which shall be kept damp for at least 24 hours, after which the specimens shall be stored and tested as required for concrete cylinders.

G. In making grout test specimens, remove molds after the grout has taken its set but before it has hardened. Store cylinders as required for concrete cylinders and test in the vertical position.

H. The compressive strength of masonry work shall be established by preliminary tests made in advance of the operations, using prisms of similar materials under the same conditions and insofar as possible, with the same bonding arrangement, mortar composition and joint thickness as for the structure. In building the prisms, the moisture content of the unit at time of laying, the consistency of the mortar, the workmanship and curing conditions shall be the same as will be used in the structure.

I. Test specimens shall be large enough to approximate the actual conditions in the finished structure, but small enough to facilitate handling and cutting to the size prisms required to fit the testing machines available. All tests shall be made in accord with the [UBC] [CAC].

J. Whenever there is any evidence that materials to be used in masonry construction do not conform to the Specifications, the material shall be tested for compliance before being used in the work.

K. All tests shall be made by the Testing Agency of record.

L. Testing of mortar and grout shall e at the discretion of the Engineer.

3.09 CLEANING

A. Remove grout scum and grout stains from the pilaster and all other surfaces immediately.

B. After pilaster is constructed, do not saturate with water for curing or any other purpose.

C. Where atmosphere is dry, dampen pilaster surface with a very light fog spray for 3 days.

PART 4: PAYMENT

Concrete masonry units will be considered as included on other items of work and no additional payment will be made therefor.

END OF SECTION

SECTION 09 96 23 – NON-SACRIFICIAL ANTI-GRAFFITI COATING

PART 1: GENERAL

1.01 DESCRIPTION

A. Provide all labor, materials, tools, transportation and incidentals to provide and field apply the Non-sacrificial Anti-Graffiti coating as indicated on the Plans and as herein specified.

B. All vendors, suppliers, and manufacturer's representatives and the associated addresses, phone and fax numbers on the Plans and in the Specifications are listed for convenience only. They are subject to change and their inclusion in no way constitutes an endorsement by the City.

C. Related Documents.
Drawings and general provisions of the Contract

1.02 DEFINITIONS

A. General: Standard coating terms defined in ASTM D 16 apply to this Section. Low- sheen refers to a finish with a gloss range between 30 and 40 when measured at a 60-degree meter.

B. General: Standard anti-graffiti properties defined in ASTM D 6578 apply to this Section.

1.03 SUBMITTALS AND SUBSTITUTIONS

A. Submit three (3) sets of a typewritten list of each component of the coating system as specified to the Engineer within twenty-one (21) days after award of contract. This list shall give the name, catalog number, and manufacturer, and shall be accompanied by cut sheets or reproductions of catalog pages for all of the equipment and material to be installed. The submittal shall include a manufacturer's certification that all products supplied comply with the requirements indicated that limit the amount of VOCs in coating products.

B. Approval of substitutions will not relieve the Contractor from complying with the requirements of the Contract Documents, Plans and Specifications.

1.04 QUALITY ASSURANCE

A. The Specifications only indicate the quality and workmanship to be performed rather than a detailed description of the performance of the work. Install said site components, materials and equipment in a functional manner and in which they were intended in the drawings.

B. Applicator Qualifications: Engage an experienced applicator who has completed anti-graffiti coating system applications similar in material and extent to those indicated for Project and whose work has a record of successful in-service performance.

C. Source Limitations: Obtain primers and undercoat materials for each coating system from the same manufacturer as the finish coats.

D. Benchmark Samples (Mockups): Provide a full-coat benchmark finish sample for each substrate required.

E. Duplicate finish of approved sample Submittals. Architect will select one area or surface of each different substrate to represent surfaces and conditions for application. Wall Surfaces: Provide samples on at least 100 sq. ft. (9 sq. m), or as directed by Architect, of wall surface for each different substrate.

F. Apply coatings to each surface as specified. Provide the required sheen of each surface.

G. After finishes are accepted, City Engineer will use the surface to evaluate coating systems of a similar nature.

H. Final approval of coatings will be from benchmark samples.

I. Preinstallation Conference: Conduct conference at Project site to comply with requirements.

J. In the event of any discrepancies between the Plans and the Specifications, the final decision as to which will be followed shall be made by the Engineer, or his designated representative. In the event the installation is contradictory to the direction of the Engineer, the installation shall be rectified by the Contractor at no additional cost to City.

1.05 DELIVERY, STORAGE AND HANDLING

A. Deliver materials to Project site in manufacturer's original, unopened packages and containers bearing manufacturer's name and label with the following information:

Name or title of material.
Product description (generic classification or binder type).
Manufacturer's stock number and date of manufacture.
Contents by volume, for vehicle constituents.
Thinning instructions.
Application instructions.
Handling instructions and precautions.

B. Store materials not in use in tightly covered containers in a well-ventilated area at a temperature range between 40 and 95 deg F. Maintain containers used in storage in a clean condition, free of foreign materials and residue.

C. Protect materials from freezing. Keep storage area neat and orderly. Remove oily rags and waste daily. Take necessary measures to ensure that workers and work areas are protected from fire and health hazards resulting from handling, mixing, and applying coatings.

1.06 PROJECT CONDITIONS

A. Apply coatings only when temperature of surfaces to be coated and surrounding air temperatures are between 45 and 85 deg F.

B. Limitations: Proceed with application only when the following existing and forecasted weather and substrate conditions permit coatings to be applied according to manufacturers' written instructions and warranty requirements.

C. Concrete surfaces and mortar have cured for more than 28 days. Rain is not predicted within 24 hours. Application proceeds more than 24 hours after surfaces have been wet, unless otherwise recommended by manufacturer.

D. Windy conditions do not exist that may cause anti-graffiti coatings to be blown onto vegetation or surfaces not intended to be treated.

E. Do not apply coatings in snow, rain, fog, or mist; when relative humidity exceeds 85 percent; at temperatures less than 5 deg F (3 deg C) above the dew point; or to damp or wet surfaces.

F. Allow wet surfaces to dry thoroughly and attain temperature and conditions specified before proceeding with or continuing coating operation. Work may continue during inclement weather only if areas and surfaces to be coated are enclosed and temperature within the area can be maintained within limits specified by manufacturer during application and drying periods.

1.07 WARRANTY

A. Special Warranty: Manufacturer's standard form in which manufacturer and applicator agree(s) to repair or replace materials that fail to maintain graffiti repellency within specified warranty period.

B. Warranty Period: Ten years from date of Substantial Completion.

PART 2: PRODUCTS

2.01 MATERIAL & MANUFACTURERS

A. Whenever a material or process is delineated or specified by patent, proprietary name or process, or manufacturer’s name, such specifications are used for the purpose of facilitating the description of material or process desired. Approved equals are acceptable.

B. Information pertaining to the product as to the manufacturer, material, model, color, finish, etc. is shown on the plan.

2.02 GENERAL MATERIALS AND MANUFACTURERS

A. Material Compatibility: Provide primers, undercoats, and finish-coat materials that are compatible with one another and substrates indicated under conditions of service and application, as demonstrated by manufacturer based on testing and field experience.

B. Material Quality: Provide manufacturer's highest grade of the various anti-graffiti coatings specified. Materials not displaying manufacturer's product identification are not acceptable.

C. Proprietary Names: Use of manufacturer's proprietary product names to designate materials is not intended to imply that products named are required to be used to the exclusion of equivalent products of other manufacturers. Furnish manufacturer's material data and certificates of performance for proposed substitutions.

D. VOC Classification: Provide anti-graffiti coating materials, including primers, undercoats, and finish-coat materials, that have a VOC classification of 100 g/L or less

2.03 EXTERIOR ANTI-GRAFFITI COATING SYSTEMS

A. Provide the following 3 coat application over exterior cast-in-place concrete; concrete and brick masonry vertical surfaces; and where indicated per plans:

a. Primer: Acrylic/Silicon UV stable bonding primer applied at spreading rate recommended by manufacturer.
   1. SCS-002SP Sealer Prime Waterborne Sealer; Seicoat Corporation 323-263-4575 www.seicoat.com.

b. Intermediate Coat: One component nanotechnological anti-graffiti coating applied at spread rate recommended by manufacturer to a dry film thickness of 1.0. Product must be a Level 1 Antigraffiti coating as specified by ASTM D6578.
   1. GPA-300 Graffiti Proofer; Seicoat Corporation 323-263-4575

c. Finish Coat: One component nanotechnological anti-graffiti coating applied at a spread rate recommended by manufacturer to a thickness of 2.0 mils. Product must be a Level 1 Antigraffiti coating as specified by ASTM D6578.
   1. GPA-300 Graffiti Proofer; Seicoat Corporation 323-263-4575 Product must meet Anti-graffiti test defined in ASTM D 6578.

PART 3: EXECUTION

3.01 EXAMINATION

A. Verify site conditions and surfaces are ready to receive work.

B. Verify that layout and site are compatible.

C. With Applicator present, examine substrates and conditions under which anti-graffiti coatings will be applied, for compliance with coating application requirements.

D. Apply coatings only after unsatisfactory conditions have been corrected and surfaces to receive coatings are thoroughly dry.

E. Start of application is construed as Applicator's acceptance of surfaces within that particular area.

F. Coordination of Work: Review other Sections in which primers or other coatings are provided to ensure compatibility of total systems for various

substrates. On request, furnish information on characteristics of specified finish materials to ensure compatible primers.

3.02 PREPARATION

A. General: Remove plates, machined surfaces, and similar items already in place that are not to be coated. If removal is impractical or impossible because of size or weight of item; provide surface-applied protection before surface preparation and coating.

B. After completing coating operations, reinstall items that were removed; use workers skilled in the trades involved.

C. Cleaning: Before applying anti-graffiti coatings, clean substrates of substances that could impair bond of coatings. Remove oil and grease before cleaning.

D. Schedule cleaning and coating application so dust and other contaminates from cleaning process will not fall on wet, newly coated surfaces.

E. Surface Preparation: Clean and prepare surfaces to be coated according to manufacturer's written instructions for each substrate condition and as specified.

F. Prepare concrete, brick, concrete masonry block, and cast stone surfaces to be coated. Remove efflorescence, chalk, dust, dirt, grease, oils, and release agents. Roughen as required to remove glaze. If hardeners or sealers have been used to improve curing, use mechanical methods to prepare surfaces.

G. Use abrasive blast-cleaning methods if recommended by coating manufacturer.

H. Do not coat surfaces if moisture content exceeds that permitted in manufacturer's written instructions.

I. Material Preparation: Carefully mix and prepare coating materials according to manufacturer's written instructions.

J. Maintain containers used in mixing and applying coatings in a clean condition, free of foreign materials and residue.

K. Stir materials before applying to produce a mixture of uniform density. Stir as required during application.

L. Do not stir surface film into the material. Remove film and, if necessary, strain coating material before using.

M. Use only the type of thinners approved by manufacturer and only within recommended limits.

N. Protect adjoining work, including sealant bond surfaces, from spillage or blow-over of coating system components.

O. Cover adjoining and nearby surfaces of aluminum and glass if there is the possibility of components being deposited on surfaces. Cover live plants and grass.

P. Coordination with Sealants: Do not apply anti-graffiti coatings until sealants for joints adjacent to surfaces receiving coatings have been installed and cured.

Q. Anti-graffiti coating work may precede sealant application only if sealant adhesion and compatibility have been tested and verified using substrate, anti-graffiti coatings, and sealant materials identical to those used in the work.

R. Proceed with installation only after unsatisfactory conditions have been corrected.

3.03 APPLICATION

A. Manufacturer's Field Service: Engage a factory-authorized service representative to inspect the substrate before application of anti-graffiti coatings and to instruct Applicator on the product and application method to be used.

B. General: Apply anti-graffiti coatings according to manufacturer's written instructions.

C. Use applicators and techniques best suited for the material being applied. Do not apply anti-graffiti coatings over dirt, rust, scale, grease, moisture, scuffed surfaces, or conditions detrimental to forming a durable coating film. Coating surface treatments and finishes are indicated in the coating system descriptions. Provide finish coats compatible with primers used. The term "exposed surfaces" includes areas visible when permanent or built-in fixtures, convector covers, grilles, covers for finned-tube radiation, and similar components are in place. Extend coatings in these areas, as required, to maintain system integrity and provide desired protection.

D. Coat surfaces behind movable equipment and furniture the same as similar exposed surfaces. Before final installation, coat surfaces behind permanently fixed equipment or furniture with prime coat only.

E. Scheduling Coating: Apply first coat to surfaces that have been cleaned, pretreated, or otherwise prepared for coating as soon as practicable after preparation and before subsequent surface deterioration.

F. The number of coats and film thickness required is the same regardless of application method.

G. Do not apply succeeding coats until previous coat has cured as recommended by manufacturer. Allow sufficient time between successive coats to permit proper drying.

H. Give special attention to edges, corners, crevices, and similar surfaces to ensure that they receive a dry film thickness equivalent to that of flat surfaces.

I. Application Procedures: Apply coatings according to manufacturer's written instructions.

J. Spray Equipment: Use mechanical methods to apply coating as permitted by manufacturers written instructions and governing regulations.

K. Use spray equipment with orifice size recommended by manufacturer for material and texture required.

L. Minimum Coating Thickness: Apply each material no thinner than manufacturer's recommended spreading rate.

M. Provide total dry film thickness of the entire system as recommended by manufacturer.

N. Prime Coats: Before applying finish coats, apply a prime coat of material, as recommended by manufacturer, to material required to be coated or finished that has not been prime coated by others.

O. Recoat primed and sealed substrates immediately if there is evidence of suction spots or unsealed areas in first coat, to ensure a finish coat with no burn-through or other defects caused by insufficient sealing.

P. Completed Work: Match approved Samples for shade and coverage. Remove, refinish, or recoat work that does not comply with specified requirements.

3.04 CLEANING

A. Immediately clean anti-graffiti coatings from adjoining surfaces and surfaces soiled or damaged by application as work progresses. Repair damage caused by application. Comply with manufacturer's written cleaning instructions.

3.05 PROTECTION

A. Protect work of other trades, whether being coated or not, against damage from coating operation. Correct damage by cleaning, repairing, replacing, and recoating, as approved by Architect, and leave in an undamaged condition.

B. Provide "Wet Paint" signs to protect newly coated finishes. After completing coating operations, remove temporary protective wrappings provided by others to protect their work.

C. At completion of construction activities of other trades, touch up and restore damaged or defaced coated surfaces.

PART 4: PAYMENT

4.01 NON-SACRIFICIAL ANTI-GRAFFITI COATING

Non-Sacrificial Anti-Graffiti Coating will be considered as included on other items of work and no additional payment will be made therefor.

END OF SECTION

SECTION 12 93 00 - SITE FURNISHINGS AND MISCELLANEOUS MATERIALS

PART 1: GENERAL

1.01 DESCRIPTION

A. Provide all labor, materials, tools, transportation and incidentals to provide and install Site Furnishings and Miscellaneous Materials as indicated on the Plans and as herein specified.

B. Related Section.
Section 03 30 53 - Miscellaneous Concrete.

C. The Standard Specifications for Public Works Construction, "Greenbook", 2018 edition, is referenced as if herein contained and the Contractor shall keep a copy at the project site. These Specifications shall supersede conflicts with information given in the "Greenbook", unless otherwise determined by the City.

1.02 QUALITY ASSURANCE

A. Shop Drawings: Provide shop drawings for each component and each item of site furniture. Shop drawings shall indicate layouts, component locations, dimensions, set-backs, details of assembly, anchors, footing details and all appurtenances required to assemble components. Three (3) sets of shop drawings shall be submitted to the City within twenty-one (21) calendar days after award of contract.

B. Product Data: Provide data on all site furniture, equipment and materials, including accessories, utility characteristics, connection requirements and product cut-sheets. Three (3) sets of product data shall be submitted to the City within twenty-one (21) calendar days after award of contract.

C. Manufacturer's Installation Instructions: Provide three (3) sets of the manufacturer's installation instructions to the City within twenty (21) calendar days of award after the contract.

D. All vendors, suppliers, and manufacturer's representatives and the associated addresses, phone and fax numbers on the Plans and in the Specifications are listed for convenience only. They are subject to change and their inclusion in no way constitutes an endorsement by the City.

1.03 DELIVERY, STORAGE AND HANDLING

Store and protect all site furnishings. Contractor shall be responsible for all site furnishings and in the event of missing or stolen items, they shall be replaced at the CONTRACTOR'S sole expense.

1.04 RELATED REQUIREMENTS

A. Obtain all permits (except permanent easements) and licenses and give notice and pay for all fees necessary to complete work under this Section as delineated or specified at no additional cost to City.

B. Manufacturer's directions, specifications and detailed drawings will be followed in all cases where the articles used furnish directions and cover points not delineated on the Plans or in the Specifications.

C. The Specifications only indicate the quality and workmanship to be performed rather than a detailed description of the performance of the work. Install said site furnishings, materials and equipment in such a manner that they will operate efficiently and evenly.

D. In the event of any discrepancies between the Plans and the Specifications, the final decision as to which will be followed shall be made by the Engineer, or his designated representative. In the event the installation is contradictory to the direction of the Engineer, the installation shall be rectified by the Contractor at no additional cost to City.

1.05 REGULATORY REQUIREMENTS

A. The work shall conform to Americans with Disabilities Act (ADA), U.S. Consumer Product Safety Commission-Public Playground Handbook for Safety, California Disabled Access Regulations-Title 24 and the State Play Equipment Guidelines (SB 2733). The Contractor shall be responsible for compliance and provide written documentation for compliance to the Engineer upon installation of all equipment and material governed by said regulations.

B. All work shall conform to the City standards for public construction and any other agency's standards for public construction having jurisdiction over the work.

C. Provide certificate(s) of compliance from authority(s) having jurisdiction over the work. The certificate(s) shall indicate approval of products and their installation. Comply with all applicable local, state, federal requirements regarding materials, methods of work, and disposal of excess and waste materials.

1.06 SAMPLES AND SUBSTITUTIONS

A. All workmanship, equipment, materials, and articles incorporated shall be the best available grade of their respective kind.

B. Provide a sample of each component specified. Accepted samples may be used in the Work, subject to approval by the Engineer.

Submit three (3) sets of a typewritten list of equipment and materials as specified to the Engineer within twenty-one (21) days after award of contract. This list shall give the name, model number, and manufacturer, and shall be accompanied by cut sheets or reproductions of catalog pages for all of the equipment and material to be installed.

C. Approval of substitutions will not relieve the Contractor from complying with the requirements of the Contract Documents, Plans and Specifications. Pay at Contractor's sole expense for all changes caused by approved substitutions which affect other items of work.

PART 2: PRODUCTS

2.01 MATERIAL

Whenever a material or process is delineated or specified by patent, proprietary name or process, or manufacturer's name, such specifications are used for the purpose of facilitating the description of material or process desired. Approved equals are acceptable.

2.02 COMPONENTS

1. Post & Rail Fence With Precast Column
2. Column 'A' (8' Ht. Masonry Column w/ Precast Column Cap)
3. Column 'B' (4.5' Ht. Masonry Column w/ Precast Column Cap)
4. Precast Column 'C'
5. Precast Sphere (60 Inch Dia.)
6. Precast Soccer Ball (36 Inch Dia.)
7. Precast Sphere (22 Inch Dia.)
8. Double Parking Lot Barrier Gates
9. Re-Install Existing Flagpole
10. Bike Rack

11. Pedestal Mounted Bottle Filler With Bi-Level Drinking Fountain

12. 18’ Ht. Ball Barrier Fence (6’ Chain Link Fence with Attached 12’ Netting)

13. Paving 1d: Interlocking Concrete Pavers

PART 3: EXECUTION

3.01 EXAMINATION

A. Verify site conditions and surfaces are ready to receive work.

B. Verify that layout and site are compatible.

3.02 PREPARATION

A. Layout and stake locations of components for approval by Engineer prior to installation.

B. Review layout requirements with other affected work.

3.03 INSTALLATION

A. Install in accordance with City standards and manufacturer’s instruction.

B. Provide concrete footings for site furnishings as detailed on the Plans or as herein specified.

C. Place decomposed granite in moist condition and placed in a minimum 3” layer. Compact with a sod roller. Contractor to submit one cubic foot sample for approval.

3.04 SITE CONDITIONS

Promptly repair damage to facilities caused by construction operations. Cost of repair at Contractor’s sole expense.

PART 4: PAYMENT

4.01 POST & RAIL FENCE WITH PRECAST COLUMN

Payment for post & rail fence with precast column will be made at the contract unit price per linear foot as set forth in the bid schedule and shall include full compensation for all labor, materials, tools, equipment, and incidentals for doing all work involved.

4.02 COLUMN ‘A’ (8’ HT. MASONRY COLUMN W/ PRECAST COLUMN CAP)

Payment for “**Column ‘A’ (8’ Ht. Masonry Column w/ Precast Column Cap)”** will be made at the contract unit price per **Each (EA)** as set forth in the bid schedule and shall include full compensation for all labor, materials, tools, equipment, and incidentals for doing all work involved.

4.03 COLUMN ‘B’ (4.5’ HT. MASONRY COLUMN W/ PRECAST COLUMN CAP)

Payment for “**Column ‘B’ (4.5 Ht. Masonry Column w/ Precast Column Cap)”** will be made at the contract unit price per **Each (EA)** as set forth in the bid schedule and shall include full compensation for all labor, materials, tools, equipment, and incidentals for doing all work involved.

4.04 PRECAST COLUMN ‘C’

Payment for “**Precast Column ‘C’”** will be made at the contract unit price per **Each (EA)** as set forth in the bid schedule and shall include full compensation for all labor, materials, tools, equipment, and incidentals for doing all work involved.

4.05 PRECAST SPHERE (60 INCH DIA.)

Payment for “**Precast Sphere (60 inch dia.)”** will be made at the contract unit price per **Each (EA)** as set forth in the bid schedule and shall include full compensation for all labor, materials, tools, equipment, and incidentals for doing all work involved.

4.06 PRECAST SOCCER BALL (36 INCH DIA.)

Payment for “**Precast Soccer Ball (36 inch dia.)”** will be made at the contract unit price per **Each (EA)** as set forth in the bid schedule and shall include full compensation for all labor, materials, tools, equipment, and incidentals for doing all work involved.

4.07 PRECAST SPHERE (22 INCH DIA.)

Payment for “**Precast Sphere (22 inch dia.)”** will be made at the contract unit price per **Each (EA)** as set forth in the bid schedule and shall include full compensation for all labor, materials, tools, equipment, and incidentals for doing all work involved.

4.08 DOUBLE PARKING LOT BARRIER GATES

Payment for “**Double Parking Lot Barrier Gates”** will be made at the contract unit price per **Each (EA)** as set forth in the bid schedule and shall include full compensation for all labor, materials, tools, equipment, and incidentals for doing all work involved.

4.09 RE-INSTALL EXISTING FLAGPOLE

Payment for “**Re-install Existing Flagpole”** will be made at the **Lump Sum (LS)** contract price as set forth in the bid schedule and shall include full compensation for all labor, materials, tools, equipment, and incidentals for doing all work involved.

4.10 BIKE RACK

Payment for "**Bike Rack"** will be made at the contract unit price per **Each (EA)** as set forth in the bid schedule and shall include full compensation for all labor, materials, tools, equipment, and incidentals for doing all work involved.

4.11 PEDESTAL MOUNTED BOTTLE FILLER WITH BI-LEVEL DRINKING FOUNTAIN

Payment for "**Pedestal Mounted Bottle Filler With Bi-Level Drinking Fountain"** will be made at the contract unit price per **Each (EA)** as set forth in the bid schedule and shall include full compensation for all labor, materials, tools, equipment, and incidentals for doing all work involved.

4.12 18' HT. BALL BARRIER FENCE (6' CHAIN LINK FENCE WITH ATTACHED 12' NETTING)

Payment for "**18' Ht. Ball Barrier Fence (6' Chain Link Fence with Attached 12' Netting)"** will be made at the contract unit price per **Linear Foot (LF)** as set forth in the bid schedule and shall include full compensation for all labor, materials, tools, equipment, and incidentals for doing all work involved.

4.13 PAVING 1d: INTERLOCKING CONCRETE PAVERS

Payment for "**Paving 1d: Interlocking Concrete Pavers"** will be made at the contract unit price per **Square Foot (SF)** as set forth in the bid schedule and shall include full compensation for all labor, materials, tools, equipment, and incidentals for doing all work involved.

END OF SECTION

SECTION 32 31 00 – PVC CHAIN LINK FENCE

PART 1 – GENERAL

1.01 SECTION INCLUDES

A. Poly Vinyl Chloride (PVC) coated chain link fabric with PVC color coated galvanized steel framework and accessories for commercial or industrial applications.

1.02 RELATED SECTIONS

A. Section 03 30 53 - Miscellaneous Concrete
B. Section 03 10 00 - Concrete Formwork

1.03 REFERENCES

A. ASTM A36 Standard Specification for Carbon Structural Steel

B. ASTM A780 Standard Practice for Repair of Damaged and Uncoated Areas of Hot-dip Galvanized
Coatings

C. ASTM B221 Standard Specification for Aluminum and Aluminum Alloy Bars, Rods, Wire Profiles and Tubes

D. ASTM F552 Standard Terminology Relating to Chain Link Fencing

E. ASTM F567 Standard Practice for Installation of Chain Link Fence

F. ASTM F626 Standard Specification for Fence Fittings

G. ASTM F668 Standard Specification for Polyvinyl Chloride (PVC) and Other Organic Polymer-Coated Steel Chain Link Fence Fabric

H. ASTM F900 Standard Specification for Industrial and Commercial Swing Gates

I. ASTM F934 Standard Specification for Standard Colors for Polymer-Coated Chain Link Fence Materials

J. ASTM F1043 Standard Specification for Strength and Protective Coatings on Steel Industrial Chain Link Fence Framework

K. ASTM F1083 Standard Specification for Pipe, Steel, Hot-Dipped Zinc-Coated (Galvanized) Welded, for Fence Structures

L. ASTM F1184 Standard Specification for Industrial and Commercial Horizontal Slide Gates

M. ASTM F1664 Standard Specification for Polyvinyl Chloride (PVC) and Other Conforming Organic Polymer-Coated Steel Tension Wire Used With Chain Link Fence

N. ASTM F1665 Standard Specification for Polyvinyl Chloride (PVC) and Other Conforming Organic Polymer-Coated Steel Barbed Wire Used With Chain Link Fence

O. ASTM F1910 Standard Specification for Long Barbed Tape Obstacles

P. ASTM F1911 Standard Practice for Installation of Barbed Tape

Q. ASTM F2200 Standard Specification for Automated Vehicular Gate Construction

R. UL 325 Door, Drapery, Gate, Louver and Window Operators

S. WLG2445 Chain Link Fence Manufacturers Institute, Chain Link Fence Wind Load Guide for the Selection of Line Posts and Line Post Spacing

1.04 SUBMITTALS

A. Changes in specifications may not be made after the bid date.

B. Shop drawings: Layout of fences and gates with dimensions, details, and finishes of components, accessories, and post foundations.

C. Product data: Manufacturer's catalog cuts indicating material compliance and specified options.

D. Samples: If requested, samples of materials (e.g., fabric, wires, color, and accessories).

1.05 QUALITY ASSURANCE

A. Manufacturer: Company having manufacturing facilities in the United States with 5 years experience specializing in manufacturing of chain link fence products.

B. Fence contractor: Contractor having 5 years experience installing similar projects in accordance with ASTM F567.

C. Tolerances: ASTM current specification and tolerances apply and supersede any conflicting tolerance.

D. Substitutions: Alternate chain link products may be acceptable by the architect as equal if approved in writing ten days prior to bidding provided that the items submitted meet the specifications contained in this document.

E. Single source: To ensure system integrity obtain the chain link system, framework, fabric, fittings, gates and accessories from a single source.

PART 2 - PRODUCTS

2.01 MANUFACTURER

Approved Manufacturer or Manufacture with an equivalent product:
Master Halco, Inc.
Phone (800) 229-5615

2.02 CHAIN LINK FENCE FABRIC

A. Poly Vinyl Chloride (PVC) color coated steel chain link fabric per ASTM F668 Class 2b Fused and adhered to metallic coated steel wire.

B. Size and Height: Refer to details.

C. Selvage of fabric to be knuckled at top and knuckled at bottom.

D. Color of chain link fabric per ASTM F934. Color to be Black

2.03 PVC COLOR COATED (BLACK) STEEL FENCE FRAMEWORK.

A. Steel pipe: ASTM F1043 Group IA, ASTM F1083 standard weight schedule 40 hot-dip galvanized pipe having a zinc coating of 1.8 oz/ft² (550 g/m²) on the outside and 1.8 oz/ft² (550 g/m²) on the inside surface. Exterior of pipe to have F1043 PVC thermally fused color coating, minimum thickness 10 mils (0.254 mm).
Regular Grade: Minimum steel yield strength of 30,000 psi (205 MPa)
Intermediate Strength Grade: Minimum steel yield strength of 50,000 psi (344 MPa)

B. Pipe End and Corner Post – Refer to Details

C. Pipe Line Post - Refer to Details

D. Pipe Rail and Braces – Refer to Details

2.04 FITTINGS

A. All fittings to be PVC thermally fused color coated having a minimum thickness of 0.006" (0.152 mm) per ASTM F626. PVC color to match fabric and framework. Moveable parts, nuts and bolts to be field coated with PVC liquid touch up after installation.

B. Post caps: ASTM F626 galvanized pressed steel, malleable iron, or aluminum alloy weather tight closure cap for tubular posts. Provide one cap for each post. "C" shaped line post without top rail do not require post caps. When top rail is specified provide line post loop tops to secure top rail.

C. Rail ends: Galvanized pressed steel per ASTM F626, for connection of rails to post using a brace band.

D. Top rail sleeves: 7" (178 mm) galvanized steel sleeve per ASTM F626.

E. Wire ties: 9 gauge (0.148") (3.76 mm) galvanized steel wire for attachment of fabric to line posts and rails. Pre-formed hog ring ties to be 9 gauge (0.148") (3.76 mm) galvanized steel or aluminum for attachment of fabric to tension wire. Tie wire and hog rings PVC coated and in compliance with ASTM F626. Color to match fabric color.

F. Brace and tension (stretcher bar) bands: ASTM F626 galvanized 12 gauge (0.105") (2.67mm) pressed steel by 3/4" (19mm) formed to a minimum 300 degree profile curvature for post attachment. Secure bands using minimum 5/16" (7.94 mm) galvanized carriage bolt and nut.

G. Tension (stretcher) galvanized steel bars: One piece lengths equal to 2 inches (50 mm) less than full height of fabric with a minimum cross-section of 3/16" x 3/4" (4.76 mm x 19 mm) per ASTM F626. Provide tension (stretcher) bars where chain link fabric is secured to the terminal post.

H. Truss rod assembly: Galvanized steel minimum 5/16" (7.9mm) diameter truss rod with pressed steel tightener, in accordance with ASTM F626

I. Carriage bolts and nuts: Galvanized of commercial quality

2.05 TENSION WIRE

A. Tension wire: Poly Vinyl Chloride (PVC) coated metallic coated steel tension wire per ASTM F 1664 9 gauge steel core wire, 0.148 (3.76 mm) PVC coating class and color to match chain link fabric

2.06 CHAIN LINK SWING GATES

A. Single Swing Gates – Refer to detail for gate height and opening. Fabricate chain link swing gates in accordance with ASTM F900. Gate frame to be of welded construction. Weld areas to be protected with zinc-rich paint per ASTM A780 then over coated with liquid PVC to match frame. The gate frame members are to be spaced no greater than 8' 0" (2.44 m) apart horizontally or vertically. Exterior members to be 1.900" (48.3 mm) OD pipe, interior members when required shall be 1.660" (42.2 mm) OD pipe. PVC coated pipe to be Grade 1 ASTM F1083 per section 2.03. Chain link fabric to match specification of fence system. Fabric to be stretched tightly and secured to vertical outer frame members using tension bar and tension bands spaced 12" (304.8 mm) on center and tied to the horizontal and interior members 12" (304.8 mm) on center using 9 gauge galvanized steel ties per section 2.04.

B. Hinges, hot dip galvanized pressed steel or malleable iron, structurally capable of supporting gate leaf and allow opening and closing without binding. Non-lift-off type hinge design shall permit gate to swing 180° (3.14 rad)

C. Latch: Galvanized forked or U-Latch type capable of retaining gate in closed position and have provision for padlock. Latch shall permit operation from either side of gate. Provide a separate pipe for locking gate in open position.

D. Double gates: Provide galvanized drop rod with center gate stop pipe or receiver to secure inactive leaf in the closed position. Provide galvanized pressed steel locking latch, requiring one padlock for locking both gate leaves, accessible from either side.

E. Keeper to secure open leafs: Provide galvanized gate hold back keeper for each gate leaf over 5' (1524 mm) wide. Gate keeper shall consist of mechanical device for securing free end of gate when in full open position.

F. Latch, hinges, moveable parts may be field coated with liquid PVC.

G. Gate posts: PVC color coated Grade 1 pipe ASTM F1083 per section 2.03. Refer to details for gate fabric height.

2.07 POST SETTING MATERIALS

A. Concrete: Minimum 28 day compressive strength of 3,000 psi (20 MPa).

PART 3 EXECUTIONS

3.01 SITE EXAMINATION

A. Survey of fence location to be provided by General Contractor.

B. Verify areas to receive fencing are completed to final grade.

3.02 CHAIN LINK FRAMEWORK INSTALLATION

A. Install chain link fence system in accordance with ASTM F567 and manufacturer's instructions.

B. Locate terminal post at each fence termination and change in horizontal or vertical direction of 30° or more.

C. Space line posts uniformly – Refer to details for line post spacing.

D. Concrete set posts: Dig holes in firm, undisturbed or compacted soil. Holes shall have diameter 4 times greater than outside dimension of post, and depths approximately 6" (152 mm) deeper than post bottom. Excavate deeper as required for adequate support in soft and loose soils, and for posts with heavy lateral loads. Set post bottom 36" (914 mm) below surface, unless otherwise noted in details, in firm, undisturbed soil. Place concrete around posts in a continuous pour. Trowel finish around post and slope to direct water away from posts.

E. Check each post for vertical and top alignment, and maintain in position during placement and finishing operations.

F. Bracing: Install horizontal brace and truss assembly at mid-height or above for fences 6' (1829 mm) and over at each fabric connection to the terminal post. The diagonal truss rod is installed at the point where the brace rail is attached to the terminal post and diagonally down to the bottom of the adjacent line post. Place the truss rod in tension by adjusting the turnbuckle.

G. Tension wire: If bottom rail not specified, install tension wires so that it will be located 4" (101.6 m) up from bottom the fabric. If top rail is not specified, install the tension wire so that it will be located 4" (101.6 mm) down from the top of the fabric. Stretch and Install tension wire before installing the chain link fabric and attach it to each post using wire ties.

H. Top rail: Install in lengths of 21' (6.400 m). Connect ends with sleeves forming a rigid connection, allow for expansion and contraction.

I. Center or Mid Rails: Install mid rails between line posts and attach to post using rail end or line rail clamps.

J. Bottom Rails: Install bottom rails between posts and attach to post using rail end or line rail clamps.

K. Touch up any nicks or scratches of the PVC color coating with liquid PVC paint.

3.03 CHAIN LINK FABRIC INSTALLATION

A. Fabric: Install fabric on security side, pull fabric taut; thread the tension bar through fabric and attach to terminal posts with tension bands spaced maximum of 15" (381 mm) on center and attach so that fabric remains in tension after pulling force is released. Install fabric so that it is 2" (50 mm) +/- 1" (25 mm) above finish grade.

B. Secure fabric using wire ties to line posts at 15" (381 mm) on center and to rails and braces 24" (610 mm) on center, and to the tension wire using hog rings 24" (610 mm) on center. Tie wire shall be secured to the fabric by wrapping it two 360 degree turns around the chain link wire pickets. Cut off any excess wire and bend back so as not to protrude so as to avoid injury if a pedestrian may come in contact with the fence.

3.04 CHAIN LINK GATE INSTALLATION

A. Swing gates: Installation of swing gates and gate posts shall be per ASTM F567. Direction of swing shall be as shown on drawings. Gates shall be hung plumb in the closed position with minimal space from grade to bottom of gate leaf. Double gate drop bar receiver shall be set in a minimum concrete footing 6" (152 mm) diameter by 24" (610 mm) deep. Gate leaf holdbacks shall be installed on all double gates and all gate leafs greater than 5' (1524 mm) in width.

B. Horizontal rolling gates: Install horizontal rolling gates and gate posts in accordance with ASTM F567. Horizontal rolling gates shall be plumb in the closed position with minimal ground clearance and slide with an initial force of 40 lbs. (18.14 kg). Double gate drop bar receiver shall be set in a minimum concrete footing 6" (152 mm) diameter by 24" (610 mm) deep.

3.05 SITE CLEAN UP

A. Clean up area adjacent to fence line from debris and unused material created by fence installation.

PART 4: PAYMENT

4.01 CHAIN LINK FENCE – 4' HIGH

Payment for "**Chain Link Fence – 4'"** high will be made at the contract unit price per **Linear Foot (LF)** as set forth in the bid schedule and shall include full compensation for all labor, materials, tools, equipment, and incidentals for doing all work involved to complete in place.

4.02 CHAIN LINK FENCE – 8’ HIGH

Payment for “**Chain Link Fence - 8’ High”** will be made at the contract unit price per **Linear Foot (LF)** as set forth in the bid schedule and shall include full compensation for all labor, materials, tools, equipment, and incidentals for doing all work involved to complete in place.

4.03 GATE - DOUBLE SWING CHAIN LINK, 8' HIGH (12' OPENING)

Payment for “**Gate - Double Swing Chain Link, 8' High (12' Opening)”** will be made at the contract unit price per **Each (EA)** as set forth in the bid schedule and shall include full compensation for all labor, materials, tools, equipment, and incidentals for doing all work involved to complete in place.

4.04 DOUBLE CANTILEVER SLIDING GATES - 8' HT. (CHAIN LINK FABRIC) WITH ELECTRONIC GATE OPENING & CLOSING OPERATORS

Payment for “**Double Cantilever Sliding Gates - 8' Ht. (Chain Link Fabric) With Electronic Gate Opening & Closing Operators”** will be made at the contract unit price per **Lump Sum (LS)** set forth in the bid schedule and shall include full compensation for all labor, materials, tools, equipment, and incidentals for doing all work involved to complete in place.

4.05 ROLLING (CHAIN LINK FENCE) GATE - 8’ HT. (20’ OPENING)

Payment for “**Rolling Chain Link Gate - 8' Ht. (20' Opening)”** will be made at the contract unit price per **Each (EA)** as set forth in the bid schedule and shall include full compensation for all labor, materials, tools, equipment, and incidentals for doing all work involved to complete in place.

END OF SECTION

SECTION 32 84 00 - IRRIGATION

PART 1 - GENERAL

1.01 SUMMARY

A. It is the intent of the Specifications and Drawings that the finished system is complete in every respect and shall be ready for operation satisfactory to the City.

B. The work shall include all materials, labor, services, transportation, and equipment necessary to perform the work as indicated on the Drawings, in these Specifications, and as necessary to complete the contract.

C. Related Sections.

Section 32 90 00 – Landscaping
Section 32 92 23 – Sod

D. The Standard Specifications for Public Works Construction, "Greenbook", 2018 edition, is referenced as if herein contained and the Contractor shall keep a copy at the project site. These Specifications shall supersede conflicts with information given in the "Greenbook", unless otherwise determined by the city.

1.02 CONSTRUCTION DRAWINGS

A. Due to the scale of the Drawings, it is not possible to indicate all offsets, fittings, sleeves, etc. which may be required. Contractor shall carefully investigate the structural and finished conditions affecting all of his work and plan his work accordingly, furnishing such fittings, etc. as may be required to meet such conditions. Drawings are generally diagrammatic and indicative of the work to be installed. The work shall be installed in such a manner as to avoid conflicts between irrigation systems and any obstacles existing or proposed, including but not limited to: building footings, underground utility structures, utility lines, architectural features, trees (new or existing), and buried boulders known or unknown.

B. Do not willfully install the irrigation system as shown on the Drawings when it is obvious in the field that obstructions, grade differences or discrepancies in area dimensions exist that might not have been considered in engineering. Such obstructions or differences shall be brought to the attention of the Engineer as soon as detected. In the event this notification is not performed, pay, at Contractor's sole cost, for any revision necessary.

1.03 QUALITY ASSURANCE

A. Provide at least one English speaking person who shall be present at all times during execution of this portion of the work and who shall be thoroughly familiar with the type of materials being installed and the manufacturer's recommended methods of installation and who shall direct all work performed under this Section.

B. Manufacturer's directions and detailed Drawings shall be followed in all cases where the manufacturer of articles used furnishes directions covering points not shown in the Drawings and Specifications.

C. All local, municipal, and state laws, rules and regulations governing or relating to any portion of this work are hereby incorporated into and made a part of these Specifications, and their provisions shall be carried out by the Contractor. Anything contained in these Specifications shall not be construed to conflict with any of the above rules and regulations of the same. However, when these Specifications and Drawings call for or describe materials, workmanship, or construction of a better quality, higher standard, or larger size than is required by the above rules and regulations, the provisions of these Specifications and Drawings shall take precedence.

D. All materials supplied for this project shall be new and free from any defects. All defective materials shall be replaced immediately at no additional cost to City.

E. Obtain the required licenses and permits including payments of charges and fees, give required notices to public authorities, verify permits secured or arrangements made by others affecting the work of this Section.

1.04 SUBMITTALS

A. Materials List:

1. After award of contract and before any irrigation system materials are delivered to the job site, submit to the Engineer a complete list of all irrigation systems, materials, or processes proposed to be furnished and installed as part of this contract.

2. Show manufacturer's name and catalog number for each item, furnish complete catalog cuts and technical data, furnish the manufacturer's recommendations as to the method of installation.

3. No substitutions will be allowed without prior written acceptance by the Engineer.

4. Manufacturer's warranties shall not relieve the Contractor of it's liability under the guarantee. Such warranties shall only supplement the guarantee.

B. Substitutions:

If the Contractor wishes to substitute any equipment or materials for equipment or materials listed on the irrigation Drawings and Specifications, it may do so by providing the following information to the Engineer for approval.

1. Provide a written statement indicating the reason for making the substitution.
2. Provide catalog cut sheets, technical data, and performance information for each substitute item.
3. Provide in writing the difference in installed price if the item is accepted.

1.05 EXISTING CONDITIONS

A. Verify and be familiar with the locations, size and detail of points of connection provided as the source of water and electrical supply, connection to the irrigation system.

B. Irrigation design is based on the available static water pressure shown on the Drawings. Verify static water on the project prior to the start of construction. Should a discrepancy exist, notify the Engineer authorized representative prior to beginning construction.

C. Prior to cutting into the soil, locate all cables, conduits, sewer septic tanks, and other utilities as are commonly encountered underground and it shall take proper precautions not to damage or disturb such improvements. If a conflict exists between the obstacles and the proposed work, promptly notify the Engineer who will arrange for relocations. Proceed in the same manner if a rock layer or any other such conditions are encountered.

D. Protect all existing utilities and features to remain on and adjacent to the project site during construction. Repair, at its sole cost, all damage resulting from its operations or negligence.

1.06 INSPECTIONS

A. Permit the Engineer to visit and inspect at all times any part of the work and shall provide safe access for such visits.

B. Where the Specifications require work to be tested by the Contractor, it shall not be covered over until accepted by the Engineer. Notify the Engineer, a minimum of 48 hours in advance of where and when the work is ready for testing. Should any work be covered without testing or acceptance, it shall be, if so ordered, uncovered at the Contractor's sole expense.

C. Inspections will be required for the following at a minimum:

1. System layout
2. Pressure test irrigation main line (Six hours at 125 PSI) lateral lines (2 hours at 100 psi).
3. Coverage test for all spray irrigation areas prior to start of weed abatement period. (refer to Section 02900 Landscaping for Weed Abatement Period)
4. Final inspection prior to start of maintenance period
5. Final acceptance

D. Site observations and testing will not commence without the record Drawings as prepared by the irrigation contractor. Record Drawings must be complete and up to date for each site visit.

E. Work that fails testing and is not accepted will be re-tested. Hourly rates and expenses of the Engineer for re-inspection or re-testing will be paid by the Contractor at no additional expense to City.

1.07 STORAGE AND HANDLING

A. Use all means necessary to protect irrigation system materials before, during, and after installation and to protect the installation work and materials of all other trades. In the event of damage, immediately make all repairs and replacements necessary to the acceptance of the Engineer and at no additional cost to the City.

B. Exercise care in handling, loading, unloading, and storing plastic pipe and fittings under cover until ready to install. Transport plastic pipe only on a vehicle with a bed long enough to allow the pipe to lay flat to avoid undue bending and concentrated external load.

1.08 CLEANUP AND DISPOSAL

A. Dispose of waste, trash, and debris in accordance with applicable laws and ordinances and as prescribed by authorities having jurisdiction. Do not bury waste material and debris on the site. Burning of trash and debris will not be permitted. Remove and dispose of rubbish and debris generated by his work and workmen at frequent intervals or when ordered to do so by the Engineer.

B. At the time of completion the entire site will be cleared of tools, equipment, rubbish and debris which shall be disposed of off-site in a disposal area that is fully and legally licensed.

1.09 TURNOVER ITEMS

A. Drawings of Record:

1. Record accurately on one set of Drawings all changes in the work constituting departures from the original Drawings.

2. The changes and dimensions shall be recorded in a legible and workmanlike manner to the satisfaction of the City. Prior to final inspection of work, submit record Drawings to the Engineer.

3. Dimensions from/to permanent points of reference such as buildings, sidewalks, curbs, etc. shall be shown. Data on record Drawings shall be recorded on a day to day basis as the project is being installed. All lettering on Drawings shall be minimum 1/8 inch in size.

4. For systems where a flow sensor has been installed, provide flow sensor gallons per minute (GPM) data for all irrigation control valves.

5. Show locations and depths of the following items:

a. Point of connection (including water P.O.C., master control valves, quick couplers, etc.)

b. Routing of sprinkler pressure lines (dimensions shown at a maximum of 100 feet along routing)

c. Isolation valves

d. Automatic remote control valves

e. Quick coupling valves

f. Routing of control wires

g. Irrigation controllers

h. Location of drip zones, flush valves, and air relief valves

i. Related equipment (as may be directed)

6. Maintain record Drawings on site at all times. Upon completion of work, transfer all as-built information and dimensions to reproducible mylar prints or per the direction of the Engineer.

B. Equipment:

1. Supply the following items:

a. Two (2) wrenches for disassembly and adjustment of each type of sprinkler head used in the irrigation system.

b. Two (2) 30-inch sprinkler keys for manual operation of control valves.

c. Two (2) quick coupler keys with a 1" bronze hose bib, bent nose type with hand wheel and two coupler lid keys.

d. Two (2) valve box cover key or wrench.

e. Four (4) extra sprinkler heads of each size and type.

f. 250 feet of additional drip line and 100 feet blank roll.

g. 200 drip line staples.

2. The above equipment shall be turned over to the Engineer at the final inspection.

1.10 COMPLETION

A. At the time of the pre-maintenance period inspection, the Engineer and governing agencies will inspect the work and, if not accepted, prepare a list of items to be completed by the Contractor. At the time of the post-maintenance period or final inspection the work will be re-inspected and final acceptance will be in writing by the Engineer.

B. The City Engineer shall have final authority on all portions of the work.

C. After the system has been completed, the Contractor shall instruct City's authorized representative in the operation and maintenance of the irrigation system and shall furnish a complete set of operating and maintenance instructions.

D. Without any additional expense to the City, repair any settling of trenches, which may occur during the one-year period following acceptance, to the City's

satisfaction. Repairs shall include the complete restoration of all damage to planting, paving or other improvements of any kind as a result of the work.

E. Program the irrigation controller for the maintenance period/plant establishment to the satisfaction of the Engineer.

1.11 GUARANTEE

A. The entire irrigation system shall be unconditionally guaranteed against all defects and fault of material and workmanship, including settling of backfilled areas below grade, for a period of one (1) year following the filing of the Notice of Completion. The guarantee shall be valid unless existing equipment utilized on the project fails within the guarantee period.

B. Should any problem with the irrigation system be discovered within the guarantee period, and at no additional expense to City, correct it within ten (10) calendar days after receipt of written notice from City. When the nature of the repairs as determined by the City constitute an emergency (i.e. broken pressure line) the City may proceed to make repairs at the Contractor's expense. Any and all damages to existing improvement resulting either from faulty materials or workmanship, or from the necessary repairs to correct same, shall be repaired to the satisfaction of the owner by the Contractor, all at no additional cost to the City.

C. Guarantee shall be submitted on Contractors own letterhead as follows:

GUARANTEE FOR SPRINKLER IRRIGATION SYSTEM

We hereby guarantee that the sprinkler irrigation system we have furnished and installed is free from defects in materials and workmanship, and the work has been completed in accordance with the Drawings and Specifications, ordinary wear and tear and unusual abuse, or neglect excepted. We shall repair or replace any defective material during the period of one year after date of filing of the Notice of Completion and also repair or replace any damage resulting from the repairing or replacing of such defects at no additional cost to the owner. We shall make such repairs or replacements within 10 calendar days following written notification by the owner. In the event of our failure to make such repairs or replacements within the time specified after receipt of written notice from owner, we authorize the owner to proceed to have said repairs or replacements made at our expense and we will pay the costs and charges therefor upon demand.

PART 2 - MATERIALS

2.01 SUMMARY

Use only new materials of the manufacturer, size and type shown on the Drawings and Specifications. Materials or equipment installed or furnished that do not meet City standards will be rejected and shall be removed from the site at no expense to the City.

2.02 PIPE

A. All pressure supply lines downstream of backflow prevention unit shall be Class 315 solvent weld PVC. Piping shall conform to ASTM 1785.

B. All non-pressure lines downstream of the remote control valve shall be Schedule 40 solvent weld PVC conforming to ASTM D1785.

2.03 PLASTIC PIPE AND FITTINGS

A. Pipe shall be marked continuously with manufacturer's name, nominal pipe size, schedule or class, PVC type and grade, National Sanitation Foundation approval, Commercial Standards designation, and date of extrusion.

B. All plastic pipe shall be extruded of an improved PVC virgin pipe compound in accordance with ASTM D2241 or ASTM D1785.

C. All solvent weld PVC fittings shall be standard weight Schedule 40 and shall be injection molded of an improved virgin PVC fitting compound. Slip PVC fittings shall be the "deep socket" bracketed type. Threaded plastic fittings shall be injection molded. All tees and ells shall be side gated. All fittings shall conform to ASTM D2466.

D. All threaded nipples shall be standard weight Schedule 80 with molded threads and shall conform to ASTM D1785.

E. All solvent cementing of plastic pipe and fittings shall be a two-step process, using primer and solvent cement applied per the manufacturer's recommendations. Cement shall be of a fluid consistency, not gel-like or ropy. Solvent cementing shall be in conformance with ASTM D2564 and ASTM D2855.

F. When connection is plastic to metal, female adapters shall be hand tightened, plus one turn with a strap wrench. Joint compound shall be non-lead base teflon paste, tape, or approved equal.

2.04 BACKFLOW PREVENTION UNIT

A. The backflow prevention unit is existing.

2.05 VALVES

A. Gate Valves

1. Gate valves shall be of the manufacturer, size, and type indicated on the Drawings.
2. Gate valves shall be constructed of a bronze body, gate and stem with a malleable iron hand wheel. Gate valves shall have threaded connections.
3. All gate valves shall have a minimum working pressure of not less than 150 psi and shall conform to AWWA standards.

B. Quick Coupler Valves:

1. Quick coupler valves shall be of the manufacturer, size, and type indicated on the Drawings.
2. Quick coupler valves shall be brass with a wall thickness guaranteed to withstand normal working pressure of 150 psi without leakage. Valves shall have 1” female threads opening at base, with two-piece body. Valves shall be operated only with a coupler key designed for that purpose. Coupler key shall be inserted into valve and a positive, watertight connection shall be made between the coupler key and valve.

C. Automatic Control Valves:

1. Automatic control valves shall be of the manufacturer, size, and type indicated on the Drawings.
2. The contractor shall verify with the manufacturer that the solenoids are compatible with the irrigation controller and wiring prior to purchase.
3. Automatic control valves shall be electrically operated.
4. Drip zone valves shall be accompanied with pressure regulators and filters per the manufacturer.

D. Ball Valves

1. Ball valves shall be of the manufacturer, size, and type indicated on the Drawings
2. Manual ball valves shall be PVC w/EPDM O-Rings and socket end connectors.
3. Manual ball valves shall have thermoplastic gear driven operating nut rotates 360° to achieve a 90° turn of the ball.

2.06 VALVE BOXES

A. Valve boxes shall be fabricated from a durable, weather-resistant plastic material resistant to sunlight and chemical action of soils.

B. The valve box cover shall be green in color and secured with a hidden latch mechanism or bolts. Where reclaimed water is being utilized, or planned in the near future, purple “reclaimed water” valve boxes shall be installed.

C. The cover and box shall be capable of sustaining a load of 1,500 pounds.

D. Valve box extensions shall be by the same manufacturer as the valve box.

E. Automatic control valve boxes shall be rectangular and sized to fit the components, see drawings for further information. Valve box covers shall be marked "RCV" with the valve identification number "heat branded" onto the cover in 2 inch high letters / numbers.

F. Gate and Ball valve boxes shall be rectangular and sized to fit the components, see drawings for further information. Valve box covers shall be marked with either "GV" or “BV” heat branded" onto the cover in 2 inch high letters.

G. Quick couplers, drip irrigation flush and air relief valve boxes shall be circular and sized to fit the components, see drawings for further information. Valve box covers shall be marked “QVC” or “FV” or “AR” “heat branded” onto the cover in 2 inch high letters.

2.07 AUTOMATIC CONTROLLER

A. Automatic controller is existing.

2.08 ELECTRICAL

A. All electrical equipment shall be NEMA Type 3, waterproofed for exterior installations.

B. All electrical work shall conform to local codes and ordinances.

2.09 LOW VOLTAGE CONTROL WIRING

A. Remote control wire shall be direct-burial AWG-UF type, size as indicated on the Drawings, and in no case smaller than 14 gauge.

B. Connections shall be Scotchlok 3M DBY Direct Bury Splice Kit.

C. Ground wires shall be white in color. Control wires shall be red (where two or more controllers are used, the control wires shall be a different color for each controller. These colors shall be noted on the "Record Drawings" Plans located on controller door).

2.10 IRRIGATION HEADS

A. Irrigation heads shall be of the manufacturer, size, type, with radius of throw, operating pressure, and discharge rate indicated on the Drawings.

B. Irrigation heads shall be used as indicated on the Drawings.

2.11 DRIP LINE

A. Drip line shall be of the manufacturer, size, type with discharge rate, emitter spacing and operating pressure as indicated on the Drawings.

1. All fittings, flush valves, air relief valves and anchor staples shall be of the same manufacturer as the drip line.

PART 3 - EXECUTION

3.01 SITE CONDITIONS

A. Inspections:

1. Prior to all work of this Section, carefully inspect the installed work of all other trades and verify that all such work is complete to the point where this installation may properly commence.
2. Verify that irrigation system may be installed in strict accordance with all pertinent codes and regulations, the original design, the referenced standards, and the manufacturer's recommendations.

B. Discrepancies:

1. In the event of discrepancy, immediately notify the Engineer.
2. Do not proceed with installation in areas of discrepancy until all discrepancies have been resolved.

C. Grades:

1. Before starting work, carefully check all grades to determine that work may safely proceed, keeping within the specified material depths with respect to finish grade.

2. The Engineer shall accept final grades before work on this Section will be allowed to begin.

D. Field Measurements:

1. Make all necessary measurements in the field to ensure precise fit of items in accordance with the original design. Coordinate the installation of all irrigation materials with all other work.
2. All scaled dimensions are approximate. Check and verify all size dimensions prior to proceeding with work under this Section.
3. Exercise extreme care in excavating and working near existing utilities. Repair damages to utilities, which are caused by Contractor's operations or neglect, at no additional cost to City.

E. Layout:

1. Prior to installation, stake out all pressure supply lines, routing and location of sprinkler heads, valves.
2. Layout irrigation system and make minor adjustments required due to differences between site and Drawings. Where piping is shown on Drawings under paved areas, but running parallel and adjacent to planted areas, install the piping in the planted areas.

F. Water Supply:

Connections to, or the installation of, the water supply shall be at the locations shown on the Drawings. Minor changes caused by actual site conditions shall be made at no additional expense to the City.

3.02 TRENCHING

A. Do NOT trench within 12' of an existing tree without consulting a certified arborist and the City Engineer.

B. Excavations shall be straight with vertical sides, even grade, and support pipe continuously on bottom of trench. Trenching excavation shall follow layout indicated on Drawings to the depths below finished grade and as noted. Where lines occur under paved area, these dimensions shall be considered below subgrade.

C. Provide minimum cover of 24 inches on pressure supply lines.

D. Provide minimum cover of 24 inches for control wires.

E. Provide minimum cover of 12 inches for non-pressure lines.

F. Pipes installed in a common trench shall have a 6-inch minimum space between pipes.

3.03 BACKFILLING

A. Backfill material on all lines shall be the same as adjacent soil free of debris, litter, and rocks over 1/2 inch in diameter.

B. Backfill shall be tamped in 4-inch layers under the pipe and uniformly on both sides for the full width of the trench and the full length of the pipe. Backfill materials shall be sufficiently damp to permit thorough compaction, free of voids. Backfill shall be compacted to 90% relative compaction and shall conform to adjacent grades.

C. Flooding in lieu of tamping is not allowed.

D. Under no circumstances shall truck wheels be used to compact backfill.

E. Provide sand backfill a minimum of 6 inches over and under all piping under paved areas.

3.04 PIPING

A. Piping under existing pavement may be installed by jacking, boring, or hydraulic driving. No hydraulic driving is permitted under asphalt pavement.

B. Cutting or breaking of existing pavement is not permitted.

C. Carefully inspect all pipe and fittings before installation, removing dirt, scale, burrs, and reaming. Install pipe with all markings up for visual inspection and verification.

D. Remove all dented and damaged pipe Sections.

E. All lines shall have a minimum clearance of 6 inches from each other and 12 inches from lines of other trades.

F. Parallel lines shall not be installed directly over each other.

G. In solvent welding, use only the specified primer and solvent cement and make all joints in strict accordance with the manufacturer's recommended methods including wiping all excess solvent from each weld. Allow solvent welds at least

15 minutes setup time before moving or handling and 24 hours curing time before filling.

H. PVC pipe shall be installed in a manner, which will provide for expansion and contraction as recommended by the pipe manufacturer.

I. Center load all plastic pipe prior to pressure testing.

J. All threaded plastic-to-plastic connections shall be assembled using Teflon tape or Teflon paste.

K. For plastic-to-metal connections, work the metal connections first. Use a non-hardening pipe dope an all threaded plastic-to-metal connections, except where noted otherwise. All plastic-to-metal connections shall be made with plastic female adapters.

3.05 CONTROL WIRING

A. Low voltage control wiring shall occupy the same trench and shall be installed along the same route as the pressure supply lines whenever possible.

B. Where more than one wire is placed in a trench, the wiring shall be taped together in a bundle at intervals of 10 feet. Bundle shall be secured to the mainline with tape at intervals of 20 feet.

C. All connections shall be of an approved type and shall occur in a valve box. Provide an 18 inch service loop at each connection.

D. An expansion loop of 12 inches shall be provided at each wire connection and/or directional change, and one of 24 inches shall be provided at each remote control valve.

E. A continuous run of wire shall be used between a controller and each remote control valve. Under no circumstances shall splices be used without prior approval.

3.06 VALVES

A. Automatic control valves, quick coupler, and gate valves shall be installed in the approximate locations indicated on the Drawings. Ball Valves are not shown are drawings, they are to be installed one ball valve per every automatic control valve manifold.

B. Valve shall be installed in shrub areas whenever possible.

C. Install all valves as indicated in the detail Drawings.

D. Valves to be installed in valve boxes shall be installed one valve per box.

3.07 VALVE BOXES

A. Valve boxes shall be installed in shrub areas whenever possible.

B. Each valve box shall be installed on a foundation of 3/4 inch gravel backfill, 3 cubic feet minimum. Valve boxes shall be installed with their tops 1/2 inch above the surface of surrounding finish grade in lawn areas and 2 inches above finish grade in ground cover areas.

3.08 IRRIGATION HEADS

A. Irrigation heads shall be installed as indicated on the Drawings.

B. Spacing of heads shall not exceed maximum indicated on the Drawings.

C. Riser nipples shall be of the same size as the riser opening in the sprinkler body.

3.09 DRIP LINE

A. Do not install drip line until weed abatement has been completed and areas have been accepted for planting.

B. Drip line shall be installed as indicated on the Drawings.

C. Spacing of drip line shall not exceed the maximum indicated on the Drawings.

D. Bury drip line at depth indicated on the Drawings.

E. Install flush valves at opposite end farthest from drip valve.

F. Install air relief valves at high point of system.

G. Staple drip line per the Drawings

3.10 MISCELLANEOUS EQUIPMENT

A. Install all assemblies specified herein according to the respective detail Drawings or Specifications, using best standard practices.

B. Quick coupler valves shall be set approximately 12 inches from walks, curbs, header boards, or paved areas where applicable.

3.11 FLUSHING THE SYSTEM

A. Prior to installation of irrigation heads, the valves shall be opened and a full head of water used to flush out the lines and risers.

B. Irrigation heads shall be installed after flushing the system has been completed.

3.12 ADJUSTING THE SYSTEM

A. Adjust valves, align heads, and check the coverage of each system prior to coverage test.

B. If it is determined by the Engineer that additional adjustments or nozzle changes will be required to provide proper coverage, make all necessary changes or adjustments prior to any planting.

C. The entire system shall be operating properly before any planting operations commence.

D. Automatic control valves shall be adjusted so that the irrigation heads and drip tubing operate at the pressure recommended by the manufacturer.

3.13 TESTING AND OBSERVATION

A. Do not allow or cause any of the work of this Section to be covered up or enclosed until it has been observed, tested and accepted by the Engineer.

B. Notify the Engineer a minimum of 48 hours in advance where and when the work is ready for testing.

C. When both drip and spray irrigation systems are completed, perform a coverage test of each system in its entirety to determine if the water coverage for the planted areas is complete and adequate in the presence of the Engineer.

D. Furnish all materials and perform all work required to correct any inadequacies of coverage due to deviations from the Plans, or where the system has been willfully installed as indicated on the Drawings when it is obviously inadequate, without bringing this to the attention of the Engineer. This test shall be accepted by the Engineer and accomplished before starting any planting.

E. Final inspection will not commence without record Drawings as prepared by the Contractor.

3.14 MAINTENANCE

During the maintenance period adjust and maintain the irrigation system in a fully operational condition providing complete irrigation coverage to all intended plantings.

3.15 COMPLETION CLEANING

Clean-up shall be made as each portion of the work progresses. Refuse and excess dirt shall be removed from the site, all walks and paving shall be broomed, and any damage sustained on the work of others shall be repaired to original conditions.

PART 4 –PAYMENT

4.01 NEW IRRIGATION SYSTEM

Payment for "**New Irrigation System"** will be made at the **Lump Sum (LS)** contract price as set forth in the bid schedule and shall include full compensation for all labor, materials, tools, equipment, and incidentals for doing all work involved.

4.02 EXISTING IRRIGATION ADJUSTMENTS

Payment for "**Existing Irrigation Adjustments"** will be made at the **Lump Sum (LS)** contract price as set forth in the bid schedule and shall include full compensation for all labor, materials, tools, equipment, and incidentals for doing all work involved.

END OF SECTION

SECTION 32 90 00 - LANDSCAPING

PART 1: GENERAL

1.01 DESCRIPTION

A. The general requirements apply to all Landscaping work operations. Provide labor, materials, tools, transportation and all incidentals necessary to perform work as indicated on the Plans and as herein specified.

B. Related Sections.

Section 32 84 00 – Irrigation

C. The Standard Specifications for Public Works Construction, "Greenbook", 2018 edition, is referenced as if herein contained and the Contractor shall keep a copy at the project site. These Specifications shall supersede conflicts with information given in the "Greenbook", unless otherwise determined by the City.

1.02 QUALITY ASSURANCE

A. Comply with all applicable local, state, federal requirements regarding materials, methods of work, and disposal of excess and waste materials.

B. Manufacturer's directions, specifications and detailed drawings will be followed in all cases where articles used furnish directions covering points not delineated on the Plans or Specifications.

C. The work included in this section will be done to the satisfaction of the City and the decision by the City as to the true construction meaning of the Plans and Specifications will be final.

D. All drop slips for landscape materials (including plants, fertilizers, pesticides, seed mixes) shall be given to the Engineer.

1.03 AGRONOMIC SOILS TESTING

A. All soil samples shall be taken in the field by a qualified soil technician from a testing agency registered by the State for agricultural evaluation.

B. Take two (2) samples of site soil at a depth of 6 to 12 inches, within proposed planting area, after completion of grading and prior to weed control and soil preparation. Sample areas shall be selected by the Engineer.

C. Request two (2) tests for fertility and suitability analysis with written recommendations for soil amendment, fertilizer and chemical conditioners, application rates for soil preparation, planting backfill mix and post-maintenance fertilization programs. Soils report recommendations shall take precedence over the amendment and fertilizer application rates specified in this Section.

D. Testing laboratory shall be Soil and Plant Laboratory, Inc., 1594 N. Main, Orange, CA 92667 (714) 282-8777 or Wallace Laboratories, 365 Coral Circle, El Segundo, Ca 90245, Phone (310) 615-0118. Tests shall be paid for by the Contractor.

E. Submit testing laboratory's interpretation, recommendations, and comments to Engineer within 7 days after the completion of rough grading.

F. For bidding purposes, the Contractor shall provide the following soil amendments for soil preparation and backfill mix.

1. Soil preparation per 1,000 s.f. of planting area:

a. 4 cubic yards Nitrolized Redwood Sawdust
b. 200 lbs. Gro Power
c. 20 lbs. Soil Sulphur

2. Backfill Mix:

a. 6 parts by volume on-site soil
b. 4 parts by volume Nitrolized Redwood Sawdust
c. 18 lb. Gro Power per cu. yd. of mix
d. 2 lbs. Iron Sulphate per cubic yard of mix

1.04 ENVIRONMENTAL REQUIREMENTS

A. Do not install landscape materials when ambient temperatures may drop below 45 degrees F (12 degrees C) or above 95 degrees F (39 degrees C).

B. Do not install landscape materials when wind velocity exceeds 30 mph (48 k/hr).

PART 2: PRODUCTS

2.01 REFERENCES

A. ANSI Z60.1 - Nursery Stock.

B. California State Department of Agriculture - Regulations for nursery inspections, rules, and grading.

2.02 TOPSOIL

Topsoil if required in planting areas shall be Class A Topsoil. Topsoil shall be as specified in Section 212-1.1.2 of the Standard Specifications for Public Works Construction.

2.03 PLANT MATERIAL

A. Trees, shrubs, ground cover and vines shall be grown by an established nursery having been in the business of growing trees, shrubs, ground cover a minimum of five (5) years. At the option of the Engineer, plants shall be inspected and tagged at the nursery prior to shipment to the planting site.

1. Trees: All trees shall be of the specified container size and of the species specified.

2. Shrubs: Shrubs shall be of the specified type and size, selected from high quality, well-shaped nursery stock.

3. Flatted Plants: Ground cover plants and other flatted plants shall be grown and remain in the flats until transplanted at the site. Soil that does not crumble with sufficient moisture, normal spacing of plants in the flat and well rooted plants shall be required to ensure the minimum disturbance of the root system at time of transplanting.

4. Grass Plugs: Plugs shall be grown and remain in their containers until transplanted on the site. All plugs shall be planted within eight (8) hours upon arrival.

B. Plant names indicated or listed in the “Plant Legend” on the Plans, conform to the approved names given in “An Annotated Checklist of Woody Ornamental Plants in California, Oregon, and Washington, Manual 4091”, published by the University of California (1979). Except for names not covered therein, the established custom of the nursery shall be followed.

C. Condition of plants shall be in accordance with the California State Department of Agriculture’s regulations for nursery inspections, rules, and grading and shall be symmetrical, typical for variety and species, sound, healthy, vigorous, free from plant disease, insect pests, or their eggs, and shall have healthy normal root systems, well filling their containers, but not to the point of being root bound.

D. Plants shall not be pruned prior to delivery, except as authorized by the City. In no case shall trees be topped before delivery.

E. The size of the plants shall correspond with that normally expected for species and variety of commercially available nursery stock, or as specified on the Plans. The minimum acceptable size of all plants, measured before pruning with the branches in normal position, shall conform with the measurements, if any, specified on the Plans. Plants larger in size than specified may be used with the approval of the City, but the use of larger plants will not serve as the basis for a change order.

F. All plant material shall be subject to the inspection and acceptance of the City before planting. A representative number of plants as determined by the City may be inspected for size and condition of root growth, insects, injuries and defects. Plants not accepted are to be removed from the site immediately and replaced with suitable plants. The City reserves the right to reject entire lots of plants represented by defective samples.

2.04 FERTILIZERS, SOIL CONDITIONING MATERIALS AND WATER

A. General.

1. Fertilizing and soil conditioning materials shall comply with the applicable requirements of the State Food and Agricultural Code. All materials shall be packaged first grade, commercial quality products identified as to source, type of material, weight, and manufacturer's guaranteed analysis. Fertilizing and soil conditioning material shall not contain toxic ingredients or fillers in quantities harmful to human life, animals, or plants.

2. Furnish a Certificate of Compliance stating that the material substantially meets the specifications.

3. Exact fertilizing and conditioning materials and the required composition and quantities shall be determined by agronomic soils test.

B. Commercial Fertilizer.

1. Commercial fertilizer shall be a palletized or granular product having a chemical analysis as specified on the Plans or in the Specifications. Commercial fertilizer shall be free-flowing material delivered in unopened sacks. Material which becomes caked or otherwise damaged shall not be used.

2. Exact composition and type of fertilizer to be determined by the agronomic soils test and will be supplied by the contractor at no additional cost to the City.

C. Nitrogen Stabilized Organic Soil Amendment.

Organic soil amendment shall be redwood sawdust free of shavings or particles of other woods such as fir or pine, supplied in bulk and .5% nitrogen stabilized by standard techniques. An acceptable substitute is nitrogen stabilized fir or cedar sawdust ground to 0-1/4" particle size and 1.0% nitrogen stabilized.

D. Water.

1. Water shall be clean, fresh and free of substances or matter which could inhibit vigorous growth of plants

2. Water shall be supplied at Contractor's sole expense at no additional cost to City through the end of the maintenance period.

2.05 HERBICIDE

A. Non-selective herbicide for weed abatement shall be Round-Up, Rodeo or approved equal.

B. Pre-emergent herbicide shall provide nine (9) month control. .

2.06 MULCH

A. Mulch shall be "Cover ES-2"

Available from or equal to:
Agromin Mulch Company
Contact Greg Jackson
714-475-8672
201 Kinetic Drive
Oxnard CA 93030

B. The mulch shall consist of fibrous, woody bark mixture of varied particle size with the following characteristics:

Percent Passing	Sieve Size
90-100	25.4 mm (1")
80-100	12.7 mm (1/2")
20-60	6.35 mm (1/4")

C. Mulch shall be packaged in bales or bags unless the City approves a bulk source in advance of delivery to the site of the work. The Contractor shall submit one sample of three (3) different mulch materials.

D. The Engineer has the right to reject all samples and request additional samples until a suitable mulch material is approved.

2.07 PRE-EMERGENCE WEED CONTROL

In areas of woody ornamental plants use Ronstar, Weedban, or approved equal.

2.08 SAMPLES

A. Samples of products and materials shall be required by the City. Submittals for inspection shall be stored on the site until furnishing of material is complete.

B. Delivery of products and materials may begin upon acceptance of samples or as directed by the City.

2.09 PLANT TABLETS

A. Plant tablets shall be Scotts Agriform, Growpower or approved equal, 20-10-5 applied at the following rates:

Tablet Size	**21 Gram**					**5 Gram**
Container Size	1 Gallon and 10” pots	5 Gallon	15 Gallon	24” Box	36” Box and Larger	Ground Cover Plants
Application Rates (No. of Tablets)	1	3	8	20	One Tablet per each foot of height	1

PART 3: EXECUTION

3.01 GENERAL

Earthwork and topsoil placement shall include the preparation for and the spreading, densification, cultivation, and raking of topsoil, including fertilization and conditioning.

1. Unless otherwise provided, curbs, walks, irrigation systems, and similar improvements required by the Plans or Specifications shall be constructed following rough grading and before landscaping.

2. Planting holes and backfill shall be as herein specified.

3. Preliminary rough grading and related earthwork, prepare areas for landscaping work to within one-tenth foot (0.1') of finish grade, or to subgrade for Class "A" topsoil if required.

3.02 TOPSOIL PREPARATION AND CONDITIONING

A. General.

1. Planting areas shall be free of weeds and other extraneous materials to a depth of twelve inches (12").

2. Soil shall not be worked when it is so wet or so dry as to cause excessive compaction or the forming of hard clods or dust.

3. The existing soil below subgrade for approved fill shall be scarified to a depth of six inches (6") prior to spreading fill material.

B. Fertilizing and Conditioning Procedures.

1. The planting area shall be brought to finish grade before spreading the fertilizers or conditioning materials specified.

2. The Contractor, at no additional cost to the City, shall make one (1) additional soils test per acre of all planting areas before and upon completion of excavation, backfilling, and grading to determine compliance with fertilizing and conditioning. The Contractor shall coordinate soil testing with the City.

3. Fertilizing and conditioning materials shall be mechanically spread at a uniform rate. The quantities of materials necessary for the planting area shall be at the site and shall be verified by delivery tickets furnished to the Engineer before spreading.

4. After spreading, the fertilizing and conditioning materials shall be uniformly cultivated into the upper six inches (6") of soil by suitable equipment, rototiller or equal, operated in at least two directions approximately at right angles. The resulting soil shall be a friable condition.

5. Fertilizer and soil amendment guidelines under agronomic soils testing shall be used for bidding purposes for planting areas, however, the

Contractor shall amend it as necessary per the soils test report at no additional cost to the City.

3.03 WEED ABATEMENT

A. The weed abatement program shall proceed upon the completion of the following:

1. Installation of all pressure main line, quick coupler valves, irrigation valves, drip irrigation valves, non-pressure spray laterals and irrigation heads have been completed and accepted. (Prior to the installation of the drip line.)

2. After all existing weeds and growth has been removed from the planting areas.

3. After the controller or a temporary controller has been installed.

B. Water all areas four (4) times daily for twenty-one (21) consecutive days and until weed seeds have germinated. Cease watering for three (3) days. Spray a non-selective herbicide (Roundup) to eradicate the germinated weeds. Allow herbicide to kill all weeds. Rake or hoe off all dead weeds to a depth of 1/4 inch below the surface of the soil. If perennial weeds or grasses still exist, re-water four (4) times daily for fourteen (14) consecutive days until new growth appears. Reapply a non-selective herbicide with a dye indicator. Remove weeds after herbicide has had sufficient time to kill.

1. Water turf areas utilizing the irrigation controller.

2. Water all drip zones manually utilizing the quick coupler valves.

3.04 FINISH GRADING

A. After fertilizing and conditioning, the soil shall be watered and allowed to settle to provide a stable surface, not overly densified to the extent that it will prevent aeration and water infiltration. After the soil has dried out to a workable condition, the planting areas shall be regraded, raked, and smoothed to the required grades and contours. Finish surfaces shall be clean and suitable for planting.

B. The finish grade shall be smooth, uniform, and free of abrupt grade changes and depressions to ensure surface drainage.

C. The finish grade below adjacent paving, curbs, or headers shall be one inch (1”) in lawn areas and two inches (2”) in shrub or ground cover areas.

3.05 PLANTING GENERAL

A. All sprinkler/irrigation work shall be inspected and accepted by the City, prior to start of any work of this subsection.

B. Location of utility, structures and lines.

1. Prior to excavation for planting or placing of stakes, locate all utilities, electric cables, conduits, irrigation lines, heads, valves and valve control wires, and all utility lines so that proper precautions may be taken not to damage such improvements.

2. In the event of a conflict between utilities and plant locations, promptly notify the Engineer who will arrange for one or the other to be relocated. If contractor fails to follow this procedure it shall repair all damages resulting from the work at contractor's sole expense.

C. All plants will be inspected by the Engineer prior to planting, including plants previously approved at the nursery. The Contractor shall be responsible for the condition of all plants, planted or otherwise, until acceptance.

D. Quantities.

1. Plant materials shall be furnished in the quantities and/or spacing as shown or noted for each location, and shall be of the species, kinds, sizes, etc., as symbolized, and/or described in the Plant Legend, as indicated on the Plans.

2. Verify all sizes and quantities on the Plans. Promptly report any discrepancy to the Engineer.

E. Substitution.

1. Any plant material or any development materials specified by trade name or equal, shall be according to these Plans and Specifications.

2. Installation and use of substitute items shall not be made until the Contractor is in receipt of written approval from the Engineer. Substitution proposals for plant material must be accompanied by written proof of non-availability within a five hundred mile radius of the project site for material originally specified and proof that material was ordered in a timely manner upon award of contract.

F. Protection and Storage.

1. Regularly water all nursery stock in containers and place them in a cool area protected from sun and drying winds.

2. Do not allow plants to dry out before or while being planted. Keep exposed roots moist by means of wet sawdust, peat moss or burlap at all times during planting operations. Do not expose roots to the air except while being placed in the ground. Wilted or diseased plants, whether in place or not, will not be accepted and shall be replaced at the Contractor's sole expense.

3. Plugs: All plugs shall be kept moist and placed in a shady area prior to planting. DO NOT ALLOW PLUGS TO DRY OUT.

G. Moisten prepared surface immediately prior to installing plant material.

H. Install plant material immediately after delivery to site, within 24 hours after harvesting to prevent deterioration.

I. Water landscaped areas immediately after installation.

J. Layout and Plant Location.

1. Planting areas, borders and boundaries, will be surveyed and staked by the Contractor and approved by the Engineer.

2. Detailed layout within the planting areas shall be performed by the Contractor and approved by the Engineer prior to planting.

3. Locate first row of plants in areas designated for center to center spacing of plants shall be located at one-half of designated spacing from the edge of the area.

3.06 TREE AND SHRUB PLANTING

A. Planting Holes. Planting holes shall be approximately square for container grown plants. The holes shall be twice the width of the plant container or ball, unless otherwise shown on the Plans. The holes shall be one-and-half times the depth of the root ball, or as shown on the Plans. The hole shall be larger, if necessary, to permit handling and planting without injury or breakage of the root ball or root system. Any plant having a broken or cracked root ball before or during planting shall not be planted.

B. Underground Obstructions. In the event that underground construction work or obstructions are encountered in the planting operation, alternate locations for

plant material will be selected by the City. Operation shall be done at no extra cost to the City.

C. Planting Procedures.

1. The following material shall be thoroughly blended and used as a backfill mix.

   6 parts by volume on-site soil
   4 parts by volume Nitrogen Stabilized Organic Amendment
   1 lbs. 16-20-0 per cubic yard of mix
   2 lbs. Iron Sulfate per cubic yard of mix

   The actual material and amounts, as determined by the agronomic soils test, shall be supplied by the Contractor at no additional cost to the City.

   No mixing for individual planting holes is permitted. Mix planting soil prior to backfilling and stockpile at the site. Iron sulfate shall not contact cement surfaces because severe staining could occur; repair or replace stained cement at Contractor's sole cost.

2. Remove all plants from their containers and set so that, when settled, they bear the same relation to the required grade as they bore to the natural grade before being transplanted. Plant each plant in the center of the pit and backfill with prepared soil. Compact the backfill mix around the ball or roots. Do not use soil in muddy condition for backfilling. Do not fill around trunks or stems. Cut off all broken or frayed roots.

3. Thoroughly water each plant when the hole is one-half filled.

4. After watering, backfill the remainder of the hole and tamp the soil in place until the surface of the backfill is level with the surrounding area and the crown of the plant is at the finished grade of the surrounding area.

5. After backfilling, a basin shall be constructed around each plant. Each basin shall be of a depth sufficient to hold at least six inches (6") of water. Basins shall be the same size as the container size of each individual plant. The basins shall be constructed of amended backfill material.

6. Set the plant tablets to be used with each plant on the top of the root ball so the required number of tablets to be used in each hole can be easily verified. Bury tablets upon approval by the Engineer.

7. Immediately after planting, apply water to each tree and shrub by means of a hose. Apply water in a moderate stream in the planting hole until the

material about the roots is completely saturated from the bottom of the hole to the top of the ground.

8. Apply water in sufficient quantities and as often as seasonal conditions require to keep the planted areas moist at all times, well below the root system of grass and plants.

9. Basins around shrubs and trees in slopes shall be permanently maintained. In turf areas, basins shall be maintained ***thirty (30) days*** following tree planting. They shall be removed at that time, unless otherwise directed by the Engineer.

D. Pruning. Pruning shall be limited to the minimum necessary to remove injured twigs and branches, and to compensate for loss of roots during transplanting, but never to exceed one-third of the branching structure. Upon approval of the Engineer, pruning may be done before delivery of plants, but not before plants have been inspected and approved.

E. Staking. All trees shall be staked per the planting details on the Plans. Staking shall be done immediately after planting.

3.07 GROUND COVER PLANTING

A. Soil preparation and fine grading shall be completed prior to ground cover planting.

B. Ground cover shall be planted in moist soil and spaced as indicated on the Plans.

C. Each plant shall be planted with its proportionate amount of flat soil to minimize root disturbance. Soil moisture shall be such that the soil does not crumble when removing plants.

D. Following planting, ground cover areas shall be regraded to restore smooth finish grade and to ensure proper surface drainage. Mulch shall be spread over the planted areas. Watering shall begin immediately following mulching.

E. When necessary to prevent plant damage from pedestrian traffic during the initial growing stage, erect temporary protective fencing to be removed at the end of the maintenance period.

F. Contractor shall hand water with a watering hose all grass plugs individually and immediately following planting. Apply enough water to saturate soil. After 3 weeks, hand water plugs every other day and after 4 weeks hand water plugs every 2 days.

G. All grass plugs shall be planted in-ground eight (8) hours after being delivered to the site. Any plugs not planted within 8 hours after being delivered shall be rejected and replaced with new and fresh plugs at no cost to the City.

3.08 MULCHING

Mulch trees, shrubs and ground cover areas after planting with three inches (3") of mulch.

3.10 MAINTENANCE AND PLANT ESTABLISHMENT

A. Maintenance period will be a minimum of ninety (90) days after "Date of Acceptance of Installation" of all planting areas. Request in writing from the Engineer notification of the date of the start of the maintenance period. At the acceptance of all planting areas, request in writing from the Engineer notification of the date of the completion of the maintenance period. The maintenance period shall not officially begin or end without written notification from the Engineer.

B. Construction fencing shall remain until after the maintenance period is complete or as directed by the Engineer.

C. Maintain all planted areas on a continuous basis as they are completed during the progress of the work and during the establishment and maintenance period, and shall continue to maintain them until final acceptance in accordance with the following.

1. Water, weed, fertilize, mow, edge, prune, spray and apply topdressing as necessary to promote a healthy growing condition. All planted areas shall be kept free of debris and shall be weeded and cultivated at intervals not to exceed ten (10) days. Keep project neat and attractive throughout the maintenance period.

2. Apply herbicides for weed control, as needed or directed by City, in accordance with manufacturer's instructions and applicable laws and regulations. Pre-emergent herbicide shall be required in all planter, shrub and ground cover areas. Remedy damage resulting from the use of herbicides.

3. Exterminate rodents and insects as required and in accordance with applicable laws and regulations. Remedy damage from use of insecticides.

4. Adjust the irrigation system to sufficiently saturate root zone without rotting trees, shrubs, and ground cover.

5. Repair or replace any damaged item caused by vehicles, vandals, bicycles, or foot traffic during the maintenance period.

6. All planted areas, unless otherwise specified will receive the following fertilization program: Fertilize with "Gro-Power Plus" at 30 lbs./1,000 s.f. every ***thirty (30) calendar days*** (twice during the maintenance period), or as indicated by the agronomic soils test. Apply "Gro-Power Controlled Release Nitrogen" ***five (5) calendar days*** before the end of the maintenance period, or as indicated by the agronomic soils test. The Contractor shall adhere to fertilization requirements of the soils tests at no additional cost.

D. Maintenance period shall be extended if plant material is not in a healthy growing condition. When all maintenance work has been completed to the satisfaction of the Engineer, the Engineer will issue to the Contractor a written notice of completion of maintenance.

3.11 INSPECTION

A. All inspections herein specified shall be made by the City. Request inspection at least forty-eight (48) hours in advance of the time the inspection is required. Requested inspections, subsequently canceled without twenty-four (24) hours notice, will be billed to the Contractor.

B. Inspection is required for, and not necessarily limited to, the following parts of the work.

1. At completion of the incorporation of soil amendments and fine grading.

2. Prior to digging plant pits for trees and shrubs.

3. During backfilling of plant pits with amended backfill.

4. Final inspection at the end of the maintenance period.

PART 4: PAYMENT

4.01 SOIL PREPARATION AND FINE GRADING

Payment for "**Soil Preparation and Fine Grading"**, will be made at the contract unit price per **Square Foot (SF)** as set forth in the bid schedule and shall include full compensation for all labor, materials, tools, equipment, and incidentals for doing all work involved to complete in place.

4.02 WEED ABATEMENT

Payment for "**Weed Abatement"** will be made at the contract unit price per **Square Foot (SF)** as set forth in the bid schedule and shall include full compensation for all labor, materials, tools, equipment, and incidentals for doing all work involved to complete in place.

4.03 TREE – 36" BOX

Payment for "**Tree - 36" Box"** will be made at the contract unit price per **Each (EA)** as set forth in the bid schedule schedule and shall include full compensation for all labor, materials, tools, equipment, and incidentals for doing all work involved to complete in place.

4.03 SHRUB - #15 CONTAINER

Payment for "**Shrub - #15 Container"** will be made at the contract unit price per **Each (EA)** as set forth in the bid schedule schedule and shall include full compensation for all labor, materials, tools, equipment, and incidentals for doing all work involved to complete in place.

4.03 SHRUB - #5 CONTAINER

Payment for "**Shrub - #5 Container"** will be made at the contract unit price per **Each (EA)** as set forth in the bid schedule schedule and shall include full compensation for all labor, materials, tools, equipment, and incidentals for doing all work involved to complete in place.

4.03 SHRUB - #1 CONTAINER

Payment for "**Shrub - #1 Container"** will be made at the contract unit price per **Each (EA)** as set forth in the bid schedule schedule and shall include full compensation for all labor, materials, tools, equipment, and incidentals for doing all work involved to complete in place.

4.03 DAMAGED TURF REPLACEMENT

Payment for "**Damaged Turf Replacement"** will be made at the contract unit price per **Square Foot (SF)** as set forth in the bid schedule schedule and shall include full compensation for all labor, materials, tools, equipment, and incidentals for doing all work involved to complete in place.

4.04 WOOD MULCH (3" THICK)

Payment for "**Wood Mulch (3" thick)"** will be made at the contract unit price per **Cubic Yard (CY)** as set forth in the bid schedule and shall include full compensation for all labor, materials, tools, equipment, and incidentals for doing all work involved to complete in place.

4.05 PRE-EMERGENCE WEED CONTROL

Pre-Emergence weed control will be considered as included in other items of work and no additional payment will be made therefor.

4.06 (90) DAY MAINTENANCE

Payment for "**(90) Day Maintenance"** will be made at the **Lump Sum (LS)** contract unit price as set forth in the bid schedule and shall include full compensation for all labor, materials, tools, equipment, and incidentals for doing all work involved to complete in place.

END OF SECTION

SECTION 32 92 23- SOD

PART 1: GENERAL

1.01 DESCRIPTION

A. The General Provisions shall apply to all Sod work operations. Provide all labor, materials, tools, transportation, equipment and incidentals necessary to perform work as indicated on the Plans and as herein specified.

B. Related Sections.

1. Section 32 90 00 Landscaping

2. Section 32 84 00 Irrigation

C. The Standard Specifications for Public Works Construction, "Greenbook" (SSPWC) 2018 edition, is referenced as if herein contained and the Contractor shall keep a copy at the project site. These specifications shall supersede conflicts with information given in the Standard Specification, unless otherwise determined by the Engineer.

D. Definitions.

1. City: City of Costa Mesa

2. Engineer: City Engineer, or the City Engineer's designated representative.

E. All vendors, suppliers, and manufacturer's representatives and the associated addresses, phone and fax numbers on the Plans and in the Specifications are listed for convenience only. They are subject to change and their inclusion in no way constitutes an endorsement by the City.

1.02 QUALITY ASSURANCE

A. Comply with all applicable local, state, federal requirements regarding materials, methods of work, and disposal of excess and waste materials.

B. Grower's directions, specifications and detailed drawings will be followed in all cases where articles used furnish directions covering points not delineated on the Plans or Specifications.

C. The work included in this section will be done to the satisfaction of the Engineer. The decision by the Engineer as to the true construction meaning of the Plans and Specifications will be final.

D. All drop slips for sod fertilizers shall be given to the Engineer.

1.03 ENVIRONMENTAL REQUIREMENTS

A. Do not install sod when ambient temperatures may drop below 45 degrees F (12 degrees C) or above 95 degrees F (39 degrees C).

B. Do not install sod when wind velocity exceeds 30 mph (48 k/hr).

PART 2: PRODUCTS

2.01 REFERENCES

A. ANSI Z60.1 - Nursery Stock.

B. California State Department of Agriculture - Regulations for nursery inspections, rules, and grading.

2.02 SOD

A. Sod shall be Celebration 'Big Rolls" or approved equivalent grown by an established sod nursery having been in the business of growing sod a minimum of five (5) years. Sod shall be free of turf disease, insects, or weeds, and capable of healthy, vigorous growth.

B. Sod shall be grown in a blown sand medium. It shall be cut with a 1/2" to 3/4" thickness of soil that completely covers the root zone. Sod shall be wide cut, big roll. The sod shall arrive vigorous and have a lush appearance, uniform texture and dark green color throughout with no dead or dying edge. The sod shall be sufficiently dense to bear handling and placement without tearing.

C. Nylon mesh in sod will not be accepted.

D. Sod may be obtained from:

A-G Sod Farms
30932 Palm Avenue
Nuevo, CA 92567
Phone: (800) 233-5254

2.03 FERTILIZERS, SOIL CONDITIONING MATERIALS AND WATER

A. General.

1. Fertilizing and soil conditioning materials shall comply with the applicable requirements of the City's Standards and Specifications. All materials shall be packaged first grade, commercial quality products identified as to source, type of material, weight, and manufacturer's guaranteed analysis. Fertilizing and soil conditioning material shall not contain toxic ingredients or fillers in quantities harmful to human life, animals, or plants.

2. The Contractor shall furnish to the Engineer the Certificate of Compliance stating that the material substantially meets the City's specifications.

3. Exact fertilizing and conditioning materials and the required composition and quantities shall be determined by the agronomic soils test.

B. Commercial Fertilizer.

1. Commercial fertilizer shall be a palletized or granular product having a chemical analysis as specified on the Plans or in the Specifications. Commercial fertilizer shall be free-flowing material delivered in unopened sacks. Material which becomes caked or otherwise damaged shall not be used.

2. Pre-planting fertilizer composition to be 6-20-20. Post-planting composition shall be 6-20-20XB. Fertilizer shall provide one pound of P and K per 1,000 square feet. Nitrogen shall not exceed 1/3 pound per 1,000 square feet. Exact composition and type to be determined by agronomic soil test.

3. Fertilizer available from:

J.R. Simplot
Lathrop, CA 95330
Phone: (209) 858-2511, Fax: (209) 858-2519

C. Water.

1. Water shall be clean, fresh and free of substances or matter which could inhibit vigorous growth of plants.

2. Water shall be supplied at Contractor's expense at no additional cost to the City through the end of the maintenance period.

PART 3: EXECUTION

3.01 FERTILIZING

A. Two to three days prior to sodding, fertilize with J.R. Simplot Best 6-20-20 at one pound of P and K per 1,000 square feet. Exact quantity shall be determined by the agronomic soil test.

Adequately irrigate after application.

B. Fifteen days after sod installation is complete, fertilize as above with J. R. Simplot Best 16-20-20XB.

3.02 INSTALLING SOD

A. Soil conditioning and fine grading shall be completed before sodding. No heavy equipment shall operate over the subgrade after grading is completed.

B. The subgrade shall be moist but not wet when sod is laid. Sod shall be laid with closely fitted joints, and the ends of the trips shall be staggered. Openings shall be plugged with sod.

C. Within two hours after installing sod and before rolling, the sod shall be adequately irrigated with a minimum of 1/2" of water. All seams and joints shall then be rolled until the sod is well bonded to the subgrade.

D. The area shall then be watered thoroughly with 2 to 4 inches of water to penetrate the subsoil at least 8 inches. Watering shall be repeated as necessary to keep the sod moist until rooted into the subgrade. Sodded areas shall be protected against foot traffic until the sod is well established.

3.03 MAINTENANCE

A. Maintenance period will be a minimum of ***ninety (90) days*** after Date of Acceptance by the City of all sod installation.

B. Maintenance includes:

1. Water, weed, fertilize, mow, edge and spray as necessary to promote a healthy growing condition. Keep project neat and attractive throughout the maintenance period.

2. Apply herbicides for weed control, as needed or directed by City, in accordance with manufacturer's instructions. Remedy damage resulting from the use of herbicides.

3. Exterminate rodents and insects as required.

4. Adjust irrigation system scheduling to sufficiently saturate root zone.

5. Repair or replace any damaged item caused by vehicles, vandals, bicycles, or foot traffic during the maintenance period.

6. (During growing season) fertilize turf every four weeks with one pound of nitrogen per 1,000 square feet in a complete fertilizer product (4-1-4 ratio).

C. Maintenance period may be extended if turf grass and other plant material is not in a healthy growing condition. When all maintenance work has been completed to the satisfaction of the Engineer, the Contractor will be released through written notification by the Engineer.

D. Mow turf a minimum of two (2) times a week with the first mowing to be completed ***seven (7) days*** after installation of sod. Maintain a mowing height of 3/8" to 3/4" inches. Do not cut more than 1/3 of grass blade at any one mowing. Grass shall be mowed with a sharp power driven reel mower. Clippings shall be collected and removed.

PART 4: PAYMENT

4.01 DAMAGED TURF REPLACEMENT

Payment for "**Damaged Turf Replacement"** will be made at the contract unit price per **Square Foot (SF)** as set forth in the bid schedule and shall include full compensation for all labor, materials, tools, equipment, and incidentals for doing all work involved.

4.02 SOD MAINTENANCE

Payment for SOD MAINTENANCE will be included under Section 32 90 00 Landscaping and no additional payment will be made therefor.

END OF SECTION

(SECTION 03 10 00 - CONCRETE FORMWORK

PART 1: GENERAL

1.01 SECTION INCLUDES

A. Formwork for cast-in place concrete, with shoring, bracing and anchorage.

B. Form accessories.

C. Form stripping.

1.02 RELATED SECTIONS

A. Section 03 20 00 - Concrete Reinforcement.

B. Section 03 30 00 - Cast-in-Place Concrete.

1.03 REFERENCES

A. ACI 301 - Structural Concrete for Buildings.

B. ACI 318 - Building Code Requirements for Reinforced Concrete.

C. ACI 347 - Recommended Practice for Concrete Formwork.

1.04 DESIGN REQUIREMENTS

A. Design, engineer and construct formwork, shoring and bracing to conform to design and code requirements; resultant concrete to conform to required shape, line and dimension.

1.05 SUBMITTALS FOR REVIEW

A. Section 01 30 00 - Submittals: Procedures for submittals.

1.06 QUALITY ASSURANCE

A. This section not used

1.07 MOCK-UP

A. This section not used

1.08 DELIVERY, STORAGE, AND PROTECTION

A. This section not used.

PART 2: PRODUCTS

2.01 WOOD FORM MATERIALS

A. Forms for exposed concrete surfaces:

Plywood, metal, metal-framed/plywood faced, or FRP which will provide continuous, flat or curved as applicable, smooth exposed concrete surfaces. Furnish in largest practicable sizes to minimize number of joints and to conform to joint system shown on Drawings, where indicated.

B. Forms for concealed concrete surfaces: Plywood, lumber, metal, or other acceptable material. Provide lumber dressed on at least 2 edges and one side for tight fit.

2.02 PREFABRICATED FORMS

A. Provide Form Liner By “Symons” or approved equal as specified on Architectural drawings. Use according to manufacturers instructions and directions. Refer to “Symons” Former Liner Application Guide.

2.03 FORMWORK ACCESSORIES

A. This section not used.

PART 3: EXECUTION

3.01 EXAMINATION

A. Verify lines, levels and centers before proceeding with formwork. Ensure that dimensions agree with drawings.

3.02 FORM TYPES

A. General: Comply with the applicable provisions of ACI 347, Guide to Formwork for Concrete, and APA Design/Construction Guide, Concrete Forming.

B. The design and construction of forms and shorings is the Contractor's responsibility but shall comply with specified requirements.

C. Form contact surfaces shall be clean, free from dents, holes and other imperfections.

D. Establish and maintain benchmarks, lines and controls necessary to achieve specified tolerances. Take an accurate survey of the form location just prior to concrete pour.

E. Concrete surfaces which will remain exposed in the Work:

1. Fill voids, fastener heads, and other imperfections in form contact surfaces with body putty sanded smooth.
2. Seal joints between plywood panels flush with compound specifically designed to seal forms, or other approved material to prevent concrete paste leakage.
3. Provide sharp, clean corners at form intersecting planes, without visible edges and offsets. Back joints with additional studs or girts.
4. Form recesses and projections with smooth finish materials and install in forms with sealed joints to prevent displacement.
5. Drill holes accurately in forms to fit ties used. Prevent leakage of concrete around tie holes. Do not drive ties through undersized or improperly prepared holes.
6. Kerf backside of wood inserts used for forming keyways, reglets, recesses and similar treatments, to allow wood to swell without spalling concrete, and to assure easy removal.

F. Re-use of forms:

1. Form materials may be re-used if they produce finished surfaces equal to finished surfaces where new form materials are used.
2. Before re-use, thoroughly clean, recondition in every respect, suitable for their re-use purpose.

3.3 FORM CONSTRUCTION

A. Construction:

1. Rigidly support and construct forms to the lines, surfaces and profiles necessary to produce concrete of the design indicated.
2. Construct forms to be removable without prying against concrete.
3. Make forms tight, without cracks or holes, to prevent leakage of mortar or loss of fine particles from concrete.
4. Cover or fill holes that are not used, and cracks that have opened up, flush with adjacent surfaces.

3.4 APPLICATION - FORM RELEASE AGENT

A. Thoroughly clean forms and coat with release agent prior to initial use (except when mill-oiled) and before each reuse.

B. Apply formcoating in compliance with its manufacturer's printed instructions and coverage rates.

C. Coat steel forms with a non-staining, rust-preventative material. Rust-stained steel formwork is not acceptable.

D. Provide a coating of uniform thickness. Do not allow excess form-coating material to accumulate in forms or to come into contact with in-place concrete against which fresh concrete will be placed.

E. Apply form coating before reinforcement is placed.

3.5 INSERTS, EMBEDDED PARTS, AND OPENINGS

A. Provide formed openings where required for items to be embedded in passing through concrete work.

B. Locate and set in place items which will be cast directly into concrete.

C. Coordinate with work of other sections in forming and placing openings, slots, reglets, recesses, sleeves, bolts, anchors, other inserts, and components of other Work.

E. Install accessories in accordance with manufacturer's instructions, straight, level, and plumb. Ensure items are not disturbed during concrete placement.

F. Provide temporary ports or openings in formwork where required to facilitate cleaning and inspection. Locate openings at bottom of forms to allow flushing water to drain.

G. Close temporary openings with tight fitting panels, flush with inside face of forms, and neatly fitted so joints will not be apparent in exposed concrete surfaces.

3.6 FORM CLEANING

A. Clean forms as erection proceeds, to remove foreign matter within forms.

B. Clean formed cavities of debris prior to placing concrete.

C. Flush with water or use compressed air to remove remaining foreign matter. Ensure that water and debris drain to exterior through clean-out ports.

3.7 FORMWORK TOLERANCES

A. Cast-in-place concrete shall not exceeding the tolerances specified in Section 03 30 00, except support form facing material to limit deflection to L/360 between supports for concrete exposed to view, and L/270 for all other concrete.

3.8 FIELD QUALITY CONTROL

A. Not used.

3.9 FORM REMOVAL

A. Remove forms only after concrete has developed sufficient strength to not be damaged by form removal operation, and to safely sustain its own weight and superimposed loads, as determined by testing field cured concrete cylinders, but not sooner than specified in ACI 347.

B. Take care when removing forms that concrete surfaces are not marred or gouged, that corners are true, sharp and unbroken. Do not pry against concrete when removing forms.

C. Cut-off nails flush in concealed concrete surfaces. Cut back tie wires and nails in exposed concrete surfaces at least 1-1/2 in. Remove rod and cone ties and separators or similar devices and pull inward away from finished surfaces.

PART 4: PAYMENT

Payment for the aforementioned applicable specifications for Concrete Formwork related to the storage building shall be considered as included within the Lump Sum (LS) price bid for Storage Building, 5-units (890 SF).

END OF SECTION

SECTION 03 20 00 - CONCRETE REINFORCEMENT

PART 1: GENERAL

1.01 SECTION INCLUDES

A. Reinforcing steel bars, wire fabric and accessories for cast-in-place concrete.

1.02 RELATED SECTIONS

A. Section 03 10 00 - Concrete Formwork.

B. Section 03 30 00 – Cast In Place Concrete.

C. Section 03 35 00 - Concrete Floor Finishing.

1.03 REFENCENCE

A. ACI 301 - Structural Concrete for Buildings.

B. ACI 318 - Building Code Requirements For Reinforced Concrete.

C. ACI SP-66 - American Concrete Institute - Detailing Manual.

D. ASTM A 82 - Cold Drawn Steel Wire for Concrete Reinforcement.

E. ASTM A 184 - Fabricated Deformed Steel Bar Mats for Concrete Reinforcement.

F. ASTM A 185 - Welded Steel Wire Fabric for Concrete Reinforcement.

G. ASTM A 496 - Deformed Steel Wire Fabric for Concrete Reinforcement.

H. ASTM A 497 - Welded Deformed Steel Wire Fabric for Concrete Reinforcement.

I. ASTM A 615 - Deformed and Plain Billet Steel Bars for Concrete Reinforcement.

J. ASTM A 616 - Rail Steel Deformed and Plain Bars for Concrete Reinforcement.

K. ASTM A 617 - Axle Steel Deformed and Plain Bars for Concrete Reinforcement.

L. ASTM A 704 - Welded Steel Plain Bar or Rod Mats for Concrete Reinforcement.

M. ASTM A 706 - Low-Alloy Steel Deformed Bars for Concrete Reinforcement.

N. ASTM A 767 - Zinc-Coated (Galvanized) Bars for Concrete Reinforcement.

O. ASTM A 775 - Epoxy-Coated Reinforcing Steel Bars.

P. ASTM D 3963 - Epoxy-Coated Reinforcing Steel.

Q. AWS D1.4 - Structural Welding Code for Reinforcing Steel.

R. AWS D12.1 - Welding Reinforcement Steel, Metal Inserts and Connections in Reinforced Concrete Construction.

S. CRSI - Concrete Reinforcing Steel Institute - Manual of Practice.

T. CRSI 63 - Recommended Practice For Placing Reinforcing Bars.

U. CRSI 65 - Recommended Practice For Placing Bar Supports, Specifications and Nomenclature.

1.04 SUMITTALS

A Shop Drawings:

1. Shop drawings are required for reinforcement deviating from that shown on the Drawings.
2. Submit bar drawings and schedules with the corresponding placing diagrams. Drawings shall be complete for any specific area of Project when submitted.
3. Copies of mill reports and test data for reinforcing steel sampled and tested, prior to starting this work.

1.05 QUALITY ASSURANCE

A. Welders' Certificates: Submit Manufacturer's Certificates, certifying welders employed on the Work, verifying AWS qualification within the previous 12 months.

B. The Contractor shall ensure that the material delivered for use is that represented by the mill reports and obtain copies of mill reports, examine them, certify whether the material represented complies with Specifications requirements, and make distribution of reports as required. Report chemical composition of each heat, as determined by ladle analysis.

C. Where materials proposed for use cannot be identified, pay for an approved testing laboratory to make one series of tests (tensile and bend) from each 2.5 tons, or

fraction thereof, of each size and kind of reinforcing steel. Include 2 samples, minimum, of sufficient length to allow tests to be made on the as-rolled bar.

1.06 HANDLING

A. Comply with the combined recommendations of AWS and the electrode manufacturer for storage of electrodes. Do not use electrodes that have been wetted.

B Deliver reinforcement to the site bundled, tagged and marked; handle to prevent damage to material. Use metal tags indicating size, length and other markings shown on placement drawings. Maintain tags after bundles are broken.

PART 2: PRODUCTS

2.01 REINFORCEMENT

A. Reinforcing steel: ASTM A 615, grade indicated on Drawings.

B. Reinforcing mesh: ASTM A 185. Provide welded wire fabric in flat sheets, not rolls.

2.02 ACCESSORIES

A. Welding electrodes: AWS A5.1 E70XX Series, low hydrogen, having a minimum yield point of 60,000 psi.

B. Tie wire: ASTM A 82, 16 gage (minimum) annealed steel wire.

C. Supports for reinforcement: Bolsters, chairs, spacers, and other devices for spacing, supporting, and fastening reinforcing bars and welded wire fabric in place. Use wire-bar-type supports complying with CRSI specifications.

D. For slabs-on-grade, use supports with sand plates or horizontal runners where base material will not support chair legs, or precast concrete block chairs with embedded wire ties.

E. For exposed-to-view concrete surfaces, where legs of supports are in contact with forms, provide supports with legs that are plastic protected (CRSI, Class 1) or stainless steel protected (CRSI, Class 2).

F. Over waterproof membranes and vapor barriers, use precast concrete chairs to prevent puncturing of membrane.

2.03 FABRICATION

A. General: Except as modified by the Drawings and the Specifications, comply with Chapter 7 of CRSI Manual of Standard Practice for fabrication of reinforcing steel.

B. Bending and forming:

1. Fabricate steel bars, wire and fabric of indicated sizes, lengths and gages, and accurately form to shapes indicated by methods that will not injure the materials.
2. Heating reinforcement for bending is prohibited. Do not install bars with unscheduled kinks or bends.

C. Tolerances: Comply with ACI 117.

PART 3: EXECUTION

3.01 INSPECTION

A. Verify conditions and measurements affecting the work of this Section at site. Make sure that detrimental conditions are corrected before proceeding with installation.

B. Placement of reinforcing steel shall be inspected prior to concrete pour.

3.02 PLACEMENT

A. Placement inspection: Place reinforcement under the continuous inspection of the Engineer or his designated representative.

B. Cleaning: Clean reinforcement of loose mill scale, excessive rust, oil, and other coating that might destroy or reduce its bond before placing it.

C. Placing: Comply with the listed reference standards as applicable.

1. ACI 315, Manual of Standard Practice for Detailing Reinforced Concrete Structures.
2. CRSI, Manual of Standard Practice.
3. AWS D1.4, Structural Welding Code - Reinforcing Steel.

D. Spacing of reinforcement: Space reinforcement to maintain the proper distance and clearance between parallel bars and between bars and forms.

E. Floor system reinforcement: Do not place until concrete in walls and columns has been placed and forms and projecting steel have been thoroughly cleaned.

F. Splices:

1. Do not splice reinforcing bars except where indicated. Bars shall be in contact, unless noted otherwise on the Drawings, at lapped splices and shall be firmly wired together before placing concrete.
2. Extend stubs and dowels required to receive and engage subsequent work a sufficient length to develop the strength of the bar. Place dowel and stub bars in the forms and secure against displacement during placing of concrete.

G. Clearance: Maintain clear distances between reinforced steel and face of concrete indicated on the Drawings.

3.03 WELDING

A. Welding: Comply with the requirements of AWS D1.4. Before welding, determine the weldability of reinforcing bars by laboratory chemical analysis of the steel. Only steel conforming to the chemical requirements specified in AWS D1.4 may be welded.

B. Welded splices: Use full penetration butt welds made by the electric-arc method unless indicated otherwise.

C. Use only welders who have passed the AWS standard qualification tests within the previous year.

D. Weld splices shall develop 125% of the specified yield strength of the reinforcing bars, or of the smaller bar in transition splices.

E. Clean bars of oil, grease, dirt and other foreign substances, and flame-dry before welding.

F. Prepare ends of bars in compliance with AWS D1.4. Preheat bars before welding.

PART 4: PAYMENT

Payment for the aforementioned applicable specifications for Concrete Reinforcement related to the storage building shall be considered as included within the Lump Sum (LS) price bid for Storage Building, 5-units (890 SF).

END OF SECTION

SECTION 03 30 00 - CAST-IN-PLACE CONCRETE

PART 1: GENERAL

1.01 SECTION INCLUDES

A. Cast-in-place concrete for footings.

B. Floors and slabs on grade.

C. Control, expansion and contraction joint devices associated with concrete work, including joint sealants.

1.02 RELATED SECTIONS

A. Section 03100 - Concrete Formwork: Formwork and accessories.

B. Section 03100 - Concrete Formwork: Embedded items in formed concrete.

C. Section 03100 - Concrete Formwork: Placement of joint device anchors in formwork.

D. Section 03200 - Concrete Reinforcement.

E. Section 03346 - Concrete Floor Finishing.

F. Section 05805 - Expansion Joint Assemblies.

G. Section 07900 - Joint Sealers.

1.03 REFERENCES

A. ACI 211.1 - Selecting Proportions for Normal, Heavyweight, and Mass Concrete.

B. ACI 211.2 - Selecting Proportions for Structural Lightweight Concrete.

C. ACI 301 - Structural Concrete for Buildings.

D. ACI 302 - Guide for Concrete Floor and Slab Construction.

E. ACI 304 - Recommended Practice for Measuring, Mixing, Transporting and Placing Concrete.

F. ACI 305R - Hot Weather Concreting.

G. ACI 306R - Cold Weather Concreting.

H. ACI 308 - Standard Practice for Curing Concrete.

I. ACI 318 - Building Code Requirements for Reinforced Concrete.

J. ASTM B 221 - Aluminum and Aluminum-Alloy Extruded Bars, Rods, Wire, Shapes, and Tubes.

K. ASTM C 33 - Concrete Aggregates.

L. ASTM C 94 - Ready-Mixed Concrete.

M. ASTM C 150 - Portland Cement.

N. ASTM C 260 - Air Entraining Admixtures for Concrete.

O. ASTM C 330 - Light Weight Aggregates For Structural Concrete.

P. ASTM C 494 - Chemical Admixtures for Concrete.

Q. ASTM C 618 - Fly Ash and Raw or Calcinated Natural Pozzolan for Use as a Mineral Admixture in Portland Cement Concrete.

R. ASTM C 948 - Test Method for Dry and Wet Bulk Density, Water Absorption and Apparent Porosity of Thin Sections of Glass-Fiber-Reinforced Concrete.

S. ASTM D 994 - Preformed Expansion Joint Filler for Concrete (Bituminous Type).

T. ASTM D 1190 - Concrete Joint Sealer, Hot-Poured Elastic Type.

U. ASTM D 1751 - Preformed Expansion Joint Fillers for Concrete Paving and Structural Construction (Non-extruding and Resilient Bituminous Types).

V. ASTM D 1752 - Preformed Sponge Rubber and Cork Expansion Joint Fillers for Concrete Paving and Structural Construction.

1.04 SUBMITTALS

A. Product Data: Provide data on joint devices, attachment accessories and admixtures.

B. Samples: Product samples need not be submitted to the Engineer if the item to be used is listed in the specifications, however, the supplier or manufacture cut-sheets for all specified items is required for submittal.

1.05 QUALITY ASSURANCE

A. Perform Work in accordance with ACI 301.

B. Acquire cement and aggregate from same source for all work.

D. Conform to ACI 305R when concreting during hot weather.

PART 2: PRODUCTS

2.01 CONCRETE MATERIALS

A. Portland cement: ASTM C 150, Type I or II low alkali. Do not change brand or type of cement without Engineer's written approval.

B. Aggregates: Submit pit source and characteristics of each type aggregate to the Engineer prior to designing mixes.

C. Hardrock aggregates: ASTM C 33 graded so that coarse aggregate nominal size is not larger than 1/5 of the narrowest dimension between form faces; nor 3/4 of the minimum clear spacing between individual reinforcing bars or bundles of bars, whichever is less, but never greater than 3/4 in. in any dimension for slabs 4 in. thick or less; 1-1/2 in. at all other locations.

D. Lightweight aggregates: ASTM C 330, from approved sources.

E. Water: Clean and not detrimental to concrete.

2.02 ADMIXTURES

A. May be used only with the Engineer's approval.

B. Submit manufacturer's data for products proposed for use to the Engineer.

2.03 ACCESSORIES

A. Bonding Agent: Weldcrete by Larsen Products Corp. or Proweld by Protex Industries Inc.

B. Structural adhesive: ASTM C 881, 2-component material suitable for use on dry or damp surfaces. Provide material "Type," "Grade," and "Class" to suit project requirements.

1. Rezi-Weld 1000 by WR Meadows.
2. Thiopoxy by WR Grace.
3. Sikadur Hi-Mod by Sika Chemical Corp.
4. Patch and Bond Epoxy by The Burke Co.

C. Vapor retarder: One of the following.

1. Rufco 300 by Raven Industries, Inc.
2. Fiberweb 200 by Fiberweb International Corp.
3. Moistop by Fortifiber Corp.
4. Griffolyn T-65 by Reef Industries, Inc.

D. Sand: Clean sand, free from excessive dirt, debris, organic matter and fines smaller than No. 200 sieve size.

E. Sealing material: Mastic, adhesive or pressure-sensitive adhesive tape recommended by the vapor barrier manufacturer.

F. Sealer: One of the following.

1. Cure-Hard by WR Meadows.
2. Ashford Formula by Curecrete Chemical Co.
3. Lapidolith by Sonneborn.
4. Seal Hard by L&M Construction Chemicals, Inc.
5. Samiseal 50 by Master Builders Co.

G. Curing Compound:

1. Liquid membrane-forming compound containing a fugitive dye, conforming to ASTM C 309, Type I, guaranteed not to affect the bond, adhesion, or effectiveness of finishes and surface treatment specified herein to be applied to concrete.
2. Curing compound used on exposed concrete surfaces shall be non-discoloring, fast drying and shall be conclusively demonstrated not to darken or yellow with age.
3. Curing compound for use on concrete floors to receive adhered covering shall be specially formulated for such use and shall be certified by the manufacturer not to inhibit the bonding qualities of flooring adhesives.

2.04 JOINT DEVICES AND FILLER MATERIALS

A. Joint sealant and back-up rod: As specified in Section 07900.

B. Expansion joint materials:

1. Joint filler: Use in combination with plastic joint cap made by Greenstreak, Quaker Plastic Corp., WR Meadows, or equal.

a. Homex Expansion Joint by Homasote Co., or equal non-bituminous product compatible with sealant specified in Section 07900.

2.05 SOURCE QUALITY CONTROL

A. This section not used

2.06 CONCRETE MIX

A. Mix design:

1. Employ a testing laboratory, acceptable to the Engineer, to design structural concrete mixes required for the Project to provide:

a. Concrete of the compressive strength indicated on the Drawings.
b. Adequate workability and proper consistency to permit concrete to be worked readily into the forms and around reinforcement without segregation and excessive bleeding.
c. Other requirements noted on the Drawings and specified herein.

3. Determine proper proportions for design mixes in compliance with ACI 211 or ACI 318.

4. Determine proper water-cement ratio by preliminary test made in compliance with ASTM C 192.

5. Proportion and design mixes shall result in concrete slump(s) at point of placement not exceeding the maximum recommended by ACI 301 and as accepted in the mix design.

6. Tests shall be conducted in compliance with ASTM C 39.

7. Submit reports showing results of sieve analysis, mix design and results of compression tests.

8. Make test specimens from not less than 3 batches of each design mix.

9. The trial batch strength for each mix shall exceed indicated f'c by 25% or a lesser amount based on standard deviations of strength test records according to ACI 318.

10. Do not start concrete production until mixes have been reviewed and are acceptable to the Engineer.

11. For each batch, weigh the fine and coarse aggregate separately, measure cement and water separately and introduce separately into the mix so that proportions can be accurately controlled and easily checked.

12. Do not change proportions established by the accepted mix design without the Engineer's written approval.

B. Cement: If concrete develops less than required minimum strength, adjust mix proportions and increase the amount of cement, as necessary.

C. Water: Do not exceed predetermined amount of water because of slowness of discharge from mixer or any other reason, but reduce water to minimum necessary to produce concrete that will work readily into corners and angles of forms and around reinforcements, without segregation of materials and without free water collecting on the surface.

D. Aggregates: Reasonable variations in grading will be allowed by the Engineer because of characteristics of available materials and the need for workability and strength.

E. Concrete mixing:

1. Mixing and delivery shall comply with ASTM C 94, these Specifications, and Building Code requirements.

2. The Engineer or his designated representative will perform check sieve analysis of the aggregates being used, check compliance with mix design and the cement being used against mix design; check that water has been removed from the drum before adding mix ingredients for the following load and shall witness the loading of mixing trucks.

3. In addition to the requirements of ASTM C 94 section 16.1, provide the following information on delivery tickets signed by an authorized representative of the batching plant with each mixer truck of concrete delivered to the site.

a. Type and brand of cement.
b. Cement content per cu. yd., of concrete.
c. Maximum size of aggregate.
d. Total water content expressed as water/cement ratio.

e. Time batched.

4. Deliver batch tickets to Inspector at the site when concrete is delivered.
5. Maintain equipment in proper operating condition, with drums cleaned before charging each batch. Schedule rates of delivery in order to prevent delay of placing the concrete after mixing, or holding dry-mixed materials too long in the mixer before the addition of water and admixtures.
6. Remove all materials, including water remaining in the ready-mix truck drum, completely before ingredients for the following loads are introduced in the drum.
7. Do not use concrete which has not been placed 30 minutes after leaving the mixer, or concrete that is not placed within 60 minutes after water is introduced into the mix.

PART 3: EXECUTION

3.01 EXAMINATION

A. Verify site conditions.

B. Verify requirements for concrete cover over reinforcement.

C. Verify that anchors, seats, plates, reinforcement and other items to be cast into concrete are accurately placed, positioned securely, and will not cause hardship in placing concrete.

3.02 PREPARATION

A. Prepare previously placed concrete by cleaning with steel brush and applying bonding agent in accordance with manufacturer's instructions.

B. In locations where new concrete is dowelled to existing work, drill holes in existing concrete, insert steel dowels and pack solid with non-shrink grout.

C. Coordinate the placement of joint devices with erection of concrete formwork and placement of form accessories.

3.03 PLACING CONCRETE

A. Place concrete in accordance with ACI 301.

B. Notify Engineer a minimum 24 hours prior to commencement of concrete pour.

C. Ensure reinforcement, inserts, embedded parts, formed expansion and contraction joints are not disturbed during concrete placement.

D. Install vapor retarder under interior slabs on grade. Lap joints minimum 6 in. and seal laps and perimeters using continuous beads or strips of sealing material applied to bottom layer; apply top layer and press sufficiently to assure complete contact.

E. Repair vapor retarder damaged during placement of concrete reinforcing. Repair with vapor retarder material; lap over damaged areas minimum 6 in. and seal watertight.

F. Spread 2 in. thick layer of damp sand over vapor retarder sheeting and work to fill voids; leave in stable condition with finished surfaces reasonably uniform at established grade.

G. Separate slabs on grade from vertical surfaces with joint filler.

H. Extend joint filler from bottom of slab to within 1/4 in. of finished slab surface. Conform to Section 07900 for finish joint sealer requirements.

I. Install joint devices in accordance with manufacturer's instructions.

J. Install construction joint devices in coordination with floor slab pattern placement sequence. Set top to required elevations. Secure to resist movement by wet concrete.

K. Install joint device anchors. Maintain correct position to allow joint cover to be flush with floor and wall finish.

L. Install joint covers in longest practical length, when adjacent construction activity is complete.

M. Apply sealants in joint devices in accordance with Section 07900.

N. Maintain records of concrete placement. Record date, location, quantity, air temperature, and test samples taken.

O. Place concrete continuously between predetermined expansion, control, and construction joints.

P. Do not interrupt successive placement; do not permit cold joints to occur.

3.04 SEPARATE FLOOR TOPPINGS

A. Prior to placing floor topping, roughen substrate concrete surface and remove deleterious material. Broom and vacuum clean.

B. Place required items to be cast in.

C. Apply bonding agent to substrate in accordance with manufacturer's instructions.

3.05 CONCRETE FINISHING

A. Finish concrete floor surfaces to requirements of Section 03346.

B. Steel trowel surfaces which are scheduled to be exposed.

3.06 CURING AND PROTECTION

A. Immediately after placement, protect concrete from premature drying, excessively hot or cold temperatures, and mechanical injury.

B. Maintain concrete with minimal moisture loss at relatively constant temperature for period necessary for hydration of cement and hardening of concrete.

C. Cure floor surfaces in accordance with ACI 308.

D. Spraying: Spray water over floor slab areas and maintain wet for 7 days.

3.07 EXECUTION - HORIZONTAL SURFACES

A. Cure floor surfaces in accordance with ACI 308.

C. Spraying: Spray water over floor slab areas and maintain wet for 14 days.

3.08 EXECUTION - VERTICAL SURFACES

A. Cure surfaces in accordance with ACI 308.

B. Spraying: Spray water over surfaces and maintain wet for 7 days.

3.09 FIELD QUALITY CONTROL

A. This section not used.

3.10 PATCHING

A. Allow Engineer to inspect concrete surfaces immediately upon removal of forms.

B. Excessive honeycomb or embedded debris in concrete is not acceptable. Notify Engineer upon discovery.

C. Patch imperfections as in accordance with ACI 301.

3.11 DEFECTIVE CONCRETE

A. Defective Concrete: Concrete not conforming to required lines, details, dimensions, tolerances or specified requirements.

B. Repair or replacement of defective concrete will be determined by the Engineer.

C. Do not patch, fill, touch-up, repair, or replace exposed concrete except upon express direction of Engineer for each individual area.

PART 4: PAYMENT

Payment for the aforementioned applicable specifications for Cast-in Place Concrete related to the storage building footings and concrete slab as shown on the plans shall be considered as included within the Lump Sum (LS) price bid for Storage Building, 5-units (890 SF). Additionally, the grading, backfill, compaction, and other site work related to the building pads and footings shall be considered as included in the LS price bid for the building and no further payment will be allowed therefor.

END OF SECTION

SECTION 03 35 00 - CONCRETE FLOOR FINISHING

PART 1: GENERAL

1.01 SECTION INCLUDES

A. Concrete finishes. This Section supplements Section 03 30 00.

B. Surface treatment with concrete hardener, sealer, and slip resistant coatings.

1.02 RELATED SECTIONS

A. Section 03 30 00 - Cast-in-Place Concrete: Prepared concrete floors ready to receive finish; control and formed expansion and contraction joints and joint devices.

B. Section 07 95 00 - Expansion Control

C. Section 07 90 00 - Joint Sealers.

1.03 REFERENCES

A. ACI 301 - Structural Concrete for Buildings.

B. ACI 302 - Guide for Concrete Floor and Slab Construction.

C. ASTM E 1155 - Determining Floor Flatness and Levelness Using the F-Number System (Inch-Pound Units).

1.04 SUBMITTALS

A. Submit complete manufacturer's data, including installation instructions where applicable, for the following items before proceeding with this work.

B. Curing and curing/hardening compounds.

C. Curing paper.

D. Bonding agents.

E. Patching and surfacing compounds.

F. Abrasive aggregates.

G. Expansion joint filler.

1.05 MAINTENANCE DATA

A. Submit maintenance Data: Provide data on maintenance renewal of applied coatings.

1.06 QUALITY ASSURANCE

A. Not used.

1.07 HANDLING/JOB CONDITIONS

A. Comply with the provisions of the same Articles in Section 03 30 00.

B. In addition protect adjacent surfaces from staining and damage by covering them with impermeable coverings securely taped in place.

PART 2: PRODUCTS

2.01 MATERIALS

A. Concrete materials: As specified in Section 03 30 00.

B. Water: Fresh, clean, and free of oil and other materials injurious to concrete.

C. Expansion joint materials:

1. Joint filler: Homex Expansion Joint by Homasote Co. or equal non-bituminous product compatible with sealant specified in Section 07 90 00. Use in combination with plastic joint cap made by Greenstreak or equal.
2. Joint sealant and back-up rod: As specified in Section 07 90 00.

D. Curing and protection paper: Non-staining paper equal to "SK-10" by Fortifiber Corp. or equal.

2.02 CONCRETE MIX FOR COLORED CONCRETE

A. Not used.

PART 3: EXECUTION

3.1 PREPARATION

A. Expansion joints:

1. Set premolded expansion joint strip below finished surface with a slightly tapered, dressed, wood strip, temporarily secured to top of expansion strip to provide space for sealant, or use an approved extruded plastic strip.
2. Install expansion joints in straight or curved lines as indicated.
3. After concrete finishing operations are completed, and concrete is cured, fill void formed by the strip with sealant as specified in Section 07 90 00. Provide joints where indicated and in all cases where concrete flatwork abuts vertical elements such as walls, columns and curbs.

3.02 GENERAL REQUIREMENTS

A. Finish concrete surfaces to produce a uniform appearance throughout area involved and throughout adjacent areas with the same treatment.

B. Where concrete finishing occurs adjacent to finished metal and similar surfaces, particularly where serrated or indented surfaces occur, remove all traces of cement film before allowing concrete to harden.

C. Use no troweling machines within 12 in. of electrical junction and outlet boxes set to finish flush with concrete floors.

D. Float and trowel such areas by hand with wood floats and steel trowels, using caution so that concrete is finished flush with box cover and matches adjacent surfaces.

E. Concrete finish will be considered defective and shall be repaired, when the results are acceptable to the Engineer, or removed and replaced with proper work conforming to Contract Documents, at no additional cost to Agency, when:

1. It does not match approved samples.
2. It is not true to lines and planes.
3. It is not properly troweled and surfaced as required, and varies in excess of 1/8 in. along a 10 ft. straightedge (except for surfaces to receive a topping slab).
4. Is scuffed or has a rough surface, except where required.
5. Does not connect properly to adjoining work.
6. Does not slope to drains.
7. Is not properly cured.

3.03 MARKINGS

A. At expansion joints and elsewhere as indicated, provide markings with a rounded edging or marking tool, to a 1/4 in. radius. In textured work, edge and mark with a combination edging and smoothing tool approximately 1-1/2 in. wide.

B. Where indicated, provide cut markings sawn into surface of cured concrete with a diamond tipped or other abrasive saw within 12 hours after placing slabs. Coordinate this work with the work of other Sections to avoid damage to adjacent vertical or horizontal surfaces.

C. Make marking lines straight, or curved where required by the Drawings, equally spaced and parallel to adjacent lines and walls, edges and other construction, and of uniform depth and cross section, with intersections accurately formed.

3.04 BUILT-IN ITEMS

A. Set items furnished under this or other Sections and finish to floor fixtures and other floor features as indicated. Adjust finish to properly connect and fit to other work. Slope floor to drain where indicated.

B. Floor drains and other items furnished and installed under other Sections: Finish concrete surface flush with rims unless detailed otherwise.

C. Exercise particular care with respect to drains to ascertain that they are installed at proper elevations to permit drainage. Do not proceed until corrective work has been performed and accepted.

3.05 FINISHING FORMED SURFACES

A. General:

1. Remove fins, laitance and loose materials from concrete surfaces when forms are removed.
2. Repair honeycombs, rock pockets, sand runs, spalls and other damaged surfaces by removing the damaged or unsatisfactory area to sound concrete, with slightly undercut edges, and filling-in with the same mix as the adjacent concrete minus the coarse aggregate.
3. Fill-in tie holes with the same mix as the adjacent concrete minus the coarse aggregate.
4. Tamp and float, or trowel patches flush with adjacent surface and to match adjacent concrete texture.

B. Rough form finish:

1. Provide as-cast rough form finish to formed concrete surfaces that are to be concealed in the finish work or by other construction, unless otherwise indicated.
2. Standard rough form finish shall be the concrete surface having the texture imparted by the form facing material used, with tie holes and defective areas repaired and patched, and fins and other projections exceeding 1/4 in. in height rubbed down or chipped off.

C. Smooth form finish:

1. Provide as-cast smooth form finish for formed concrete surfaces that are to be exposed-to-view, or that are to be covered with a material applied directly to the concrete, or a material bonded to the concrete such as waterproofing, dampproofing, painting and similar system.
2. Provide smooth form finish by selecting form material to impart a smooth, hard, uniform texture and arranging the orderly and symmetrical with a minimum of seams. Repair and patch defective areas with all fins or other projections completely removed and smooth.

D. Smooth rubbed finish:

1. Provide smooth rubbed finish to scheduled concrete surfaces which have received smooth form finish treatment, not later than the day after form removal.
2. Moisten concrete surfaces and rub with carborundum brick or other abrasive until a uniform color and texture is produced. Do not apply cement grout other than that created by the rubbing process.

E. Grout cleaned finish:

1. Provide grout cleaned finish to scheduled concrete surfaces which have received smooth form finish treatment.
2. Combine one part Portland cement to 1-1/2 parts fine sand by volume, and mix with water to consistency of thick paint. Blend standard Portland cement and white Portland cement, amounts determined by trial patches, so that the final color of dry grout will closely match adjacent concrete surfaces.
3. Thoroughly wet the concrete surface and apply grout uniformly by brushing or spraying immediately to the wetted surfaces. Scrub surface with cork float or stone to coat surface and fill surface holes. Remove excess grout by scraping, followed by rubbing with clean burlap and remove any visible grout film. Keep grout damp during setting period by means of fog spray at least 36 hours after final rubbing. Complete any area in the same day it is started, with the limits of any area being natural breaks in the finished surface.

H. Curing:

1. Wet the tops and exposed portions of formed concrete and keep moist until forms are removed.
2. If forms are removed before 14 days after concrete is cast, coat concrete with curing compound as specified for flatwork below.

3.06 COMPACTING AND FLOATING FLATWORK

A. Bring slabs with monolithic finish to proper level using screeds and strike off with a straightedge. Remove excess water and laitance.

B. Compact and consolidate to embed coarse aggregates.

C. Float and test surfaces with a 10 ft. straightedge and eliminate high and low spots to comply with tolerances specified.

D. From this point, use the methods and tools necessary to produce surface finish specified.

E. Use continuous screeds of such type and construction and so spaced and located as to produce surface tolerances specified.

3.07 SPECIAL PLACING REQUIREMENTS FOR COLORED CONCRETE

A. Not used

3.08 TOLERANCES

A. Maximum Variation of Surface Flatness For Exposed Concrete Floors: 1/8 in. in 10 ft.

3.09 METHODS OF FINISHING AND CURING

A. Keep concrete continuously moist for 14 days minimum. Leave paper in place as temporary protection as long as possible.

3.10 MOISTURE CONTROL

A. In addition to finishing requirements specified, use a water fog spray to reduce plastic shrinkage cracks during flatwork finishing operations when conditions of low humidity and high temperature exist.

B. Immediately after wet concrete has been leveled, or sloped as required, and the shiny film of moisture disappears, start fog spraying and continue until final troweling, by applying a light film of moisture with an atomizing type sprayer.

C. Use frequent light applications of moisture rather than excessive amounts at any one time. Adjust the amount and frequency of fog spray as required by variable conditions of weather, wind, temperature and humidity.

3.11 FLATWORK FINISHES

A. Integral smooth steel trowel finish: Use for surfaces to receive carpet, resilient flooring, and surfaces which have no other specific finish specified.

B. Trowel surface until the slabs are finished to a smooth, hard, burnished surface.

C. Consolidate the concrete surface by final hand troweling operation, free of trowel marks, uniform in texture and appearance, and with surface plane tolerance specified. Grind smooth surface defects which would telegraph through applied floor covering system.

3.12 ADJUST AND CLEAN

A. Protect exposed concrete work as necessary to prevent damage resulting from impact or from subsequent work or rubbish.

B. Protect adjacent work from damages by this work with heavy kraft paper or polyethylene film.

C. Maintain protection in effective condition for as long as need for protection exists.

D. Control use of water within the building so that no damage to previously installed work or existing structures and finish occurs.

PART 4: PAYMENT

Payment for the aforementioned applicable specifications for Concrete Floor Finishing related to the storage building shall be considered as included within the Lump Sum (LS) price bid for Storage Building, 5-units (890 SF) and no further payment will be allowed therefor.

END OF SECTION

SECTION 04 20 00 - CONCRETE MASONRY UNITS

PART 1: GENERAL

1.01 SECTION INCLUDES

A. Concrete masonry units (CMU).

B. Reinforcement, anchorage, and accessories.

1.02 RELATED SECTIONS

A. Section 03 20 00 - Concrete Reinforcement: Reinforcing steel for concrete work including dowels in footings.

1.05 REFERENCES

A. ACI 530 - Building Code Requirements for Masonry Structures.

B. ACI 530.1 - Specifications For Masonry Structures.

C. ASTM A 82 - Cold-Drawn Steel Wire for Concrete Reinforcement.

D. ASTM A 123 - Zinc (Hot-Dipped Galvanized) Coatings on Iron and Steel Products.

E. ASTM A 167 - Stainless and Heat-Resisting Chromium-Nickel Steel Plate.

F. ASTM A 525 - Steel Sheet, Zinc Coated, (Galvanized) by the Hot-Dip Process.

G. ASTM A 580 - Stainless and Heat-Resisting Steel Wire.

H. ASTM A 615 - Deformed and Plain Billet Steel Bars for Concrete Reinforcement.

I. ASTM B 370 - Copper Sheet and Strip for Building Construction.

J. ASTM C 55 - Concrete Building Brick.

K. ASTM C 90 - Load-Bearing Concrete Masonry Units.

L. ASTM C 652 - Hollow Brick (Hollow Masonry Units Made From Clay or Shale).

M. IMIAC - International Masonry Industry All-Weather Council: Recommended Practices and Guide Specification for Cold Weather Masonry Construction.

N. UL - Fire Resistance Directory.

1.06 SUBMITTALS

A. Shop Drawings: Indicate bars sizes, spacings, locations, reinforcement quantities, bending and cutting schedules, supporting and spacing devices for reinforcement and accessories.

B. Product Data: Provide data for masonry units.

C. Samples: Submit four samples of decorative block units to illustrate color, texture and extremes of color range.

D. Manufacturer's Certificate: Certify that Products meet or exceed specified requirements.

1.07 QUALITY ASSURANCE

A. Perform Work in accordance with the current edition of the California Building Code.

B. Mortar and grout mix design:

1. The Contractor shall employ and pay for, an independent testing laboratory acceptable to the Engineer to design the mortar and grout mixes required.

2. The mixes shall be designed by the testing laboratory to produce mortar and grout of the strengths shown on the Drawings. Refer herein for tests to be used in determining masonry strengths.

1.08 QUALIFICATIONS

A. Manufacturer: Company specializing in manufacturing the Products specified in this section with minimum 5 years experience.

1.09 REGULATORY REQUIREMENTS

A. Conform to applicable code for masonry construction.

PART 2: PRODUCTS

2.01 MATERIALS

A. CMU: Medium weight load-bearing units, conforming to ASTM C 90, Grade N-1, except for special shapes. All units from the same plant. CMUs which will remain exposed shall have a uniform texture and color. Provide special shapes such as open-end units and channel blocks, as required by job conditions.

B. Masonry units shall have cured for not less than 28 days when placed in structure.

C. Masonry units shall have a maximum linear shrinkage of 0.06% from saturated to oven dry condition, when tested according to methods published in the Quality Control Standards of CMA.

D. Decorative Block Units: ASTM C 90, color as selected.

E. Portland cement: ASTM C 150, Type I, II or III.

F. Lime: ASTM C 207, Type S.

G. Aggregates:

1. For grout: ASTM C 404. Modify coarse aggregate grading requirements so that not more than 5% pass a No. 8 sieve and 100% passes a 3/8 in. sieve.

2. For mortar: ASTM C 144.

H. Mortar coloring pigments: Chemically inert, color-fast, finely ground limeproof pigment by LM Scofield & Co., or equal, of the color selected to match Engineer's approved sample.

I. Admixture for grout: Sika Grout-Aid by the Sika Corp. or equal.

J. Water: Potable and fresh.

K. Reinforcing steel: ASTM A 615, grade shown.

L. Miscellaneous materials: As hereinafter specified and as necessary to complete this work.

2.02 MORTAR AND GROUT MIXING

A. Mix in the proportions indicated on the Drawings.

B. Use admixtures according to their manufacturer's printed instructions. Secure manufacturer or distributor initial supervision by a qualified field representative to assure proper use of admixture.

C. Mix by placing 1/2 of water and sand in operating mixer. Then add cement, lime, admixture and the remainder of sand and water. After all ingredients are in the mixer, mix mechanically for not less than three minutes. Do not hand-mix ingredients.

D. Use grout for placing of consistency as fluid as possible for placing without segregation of constituent parts.

E. Mortar may be retempered with water as required to maintain high plasticity.

F. Retemper on mortar boards only by adding water within a basin formed with the mortar and rework the mortar into the water.

G. Discard mortar and grout which are unused after 1-1/2 hour from initial mixing time.

PART 3: EXECUTION

3.01 SHORES AND CENTERING

A. Design, erect, support, brace and maintain shoring and centering for temporary support of masonry elements.

B. Construct true to required shape, size and form, well braced and made rigid in all parts and capable of supporting and sustaining the loads to which they are subjected.

C. Leave shores and centering in place until masonry can safely carry its own weight and the added loads of construction.

D. Brace CMU walls adequately to withstand all forces they will be subjected to during construction. Walls are not designed to be self-supporting for lateral loads until attached to floor and roof elements.

3.02 WORKMANSHIP

A. Erect masonry plumb, square, straight and true to indicate lines, position and dimensions, in level courses with joints properly aligned.

B. Use special units as required to form bond beams, openings and offsets, and maintain a proper bond throughout entire length of wall.

C. Fractional parts of masonry units are prohibited in the work where whole units can be used. Chinking of interstices with fragments and bats is prohibited.

D. Use sound, dry, clean masonry units free from cracks when placed in the structure.

E. Cut units accurately to fit openings for other work. Cut and patch holes neatly and accurately.

F. If it is necessary to move a unit after it as been once set in place, remove the unit from the wall, clean and set in fresh mortar.

G. Where necessary to cut CMU in order to conform to adjacent construction and/or to indicated joint pattern, saw blocks with masonry saw to produce a straight, sharp edge without spalling or other defects. Cut units as required to maintain uniform joint widths throughout.

H. Do not exceed the tolerances contained in ACI 117 for completed work..

3.03 REINFORCEMENT

A. When a foundation dowel does not line up with a vertical core, do not slope more than 1 horizontal in 6 vertical. Grout dowels into a core in vertical alignment, even though it is in an adjacent cell to the vertical wall reinforcement.

B. Embed reinforcement completely in grout with minimum coverage specified below.

3.04 BONDING

A. For bonding the masonry to the foundation, clean top surface of concrete foundation, remove laitance and expose aggregates before starting masonry construction.

B. Lay-up walls in straight uniform courses with regular running bond.

C. Corners shall have a standard masonry bond by overlapping units and grouting solid.

3.05 JOINTS

A. Lay the starting joint on foundations with full mortar coverage on the bed joint. Keep area where grout occurs free from mortar so that grout will contact the foundation.

B. Mortar joints shall be straight, clean and uniform in width. Tool with a round bar to produce a dense, slightly concave surface well bonded to the block on each side where masonry will remain exposed in the Work. Masonry which will be concealed from view shall have joints struck flush.

C. Perform tooling when mortar is partially set but still sufficiently plastic to bond. Use a tool which compacts the mortar, pressing excess mortar out of joint rather than dragging it out.

D. Rake out joints which are not right at the time of tooling, point and then tool.

E. Unless otherwise detailed, make joints 3/8 in. thick with full mortar coverage on face shells and on the webs surrounding cells to be filled.

F. Butter vertical head joints well for a thickness equal to the face shell of the unit and shove these joints tightly so that the mortar bonds well to both units.

G. Set lintels, capping units and bearing plates in a full bed of mortar.

H. Do not wet the masonry units except that in very dry weather the contact surfaces of the units shall be moistened immediately before laying.

3.06 GROUTING

A. Keep mortar droppings out of or remove from the grout space before grouting.

B. Perform grouting from the inside of the masonry. Vibrate grout after initial absorption of water by the CMU, but before plasticity is lost, to encase steel and to insure contact with masonry cells. Encase reinforcement in minimum of 1/2 in. of grout between block and reinforcement.

C. Vertical cells to be filled shall have vertical alignment to maintain a continuous unobstructed cell area. Grout beams over opening in one continuous operation.

D. Grout bolts and anchors inserted in the wall solidly so that there is a minimum of 1 in. of grout between the bolt and the masonry unit.

E. Grout unit masonry in heights of 4 ft. or less, unless high lift grout procedures are submitted to, and accepted by the Architect and/or Engineer, and the Contractor reimburses the Agency for the added inspection costs.

3.07 HOLLOW METAL FRAMES

A. Locate frames accurately, erect plumb and anchor securely to floor. Brace in position prior to start of masonry erection.

B. Frames are specified to be furnished with adjustable anchors. Adjust anchors to coincide with horizontal joints in masonry.

C. Fill frames solid with mortar or grout as erection progresses.

D. Provide temporary wood spreaders from jamb to jamb to ensure that jambs do no bow in or distort from straight line as frames are filled with mortar.

E. Provide temporary shores to support heads of metal frames and prevent deflection from superimposed loads during erection.

3.08 FIELD QUALITY CONTROL

A. The Engineer or his representative will test mortar and grout as required by governing Building Code.

B. Special inspection is required unless noted otherwise on Structural Drawings.

C. The Engineer shall make the following tests in accord with these Specifications and the requirements of the governing Building Code. The minimum acceptable test results are listed below.

D. At the beginning of masonry work, at least 2 test samples of mortar grout shall be taken and prepared for each 50 cu. yds. or fractional part hereof, and continuously stored in most air until tested. The compressive strengths shall meet the minimum strengths specified. Perform tests in compliance with the following:

E. Compression test strengths:

1. Mortar compression tests: On 2 in. x 2 in. cubes tested in compliance with ASTM C 109.

a. 28 day: 1800 psi.

2. Grout compression tests: On cylinders made and cured in compliance with ASTM C 31. Compressive strength shall be determined in compliance with the UBC.

a. 28 day: 2500 psi.

F. Additional samples shall be taken whenever any change in materials or job conditions.

G. In making mortar test specimens, the mortar shall be taken from the unit soon after spreading. After molding, the molds shall be carefully protected by a covering which shall be kept damp for at least 24 hours, after which the specimens shall be stored and tested as required for concrete cylinders.

H. In making grout test specimens, remove molds after the grout has taken its set but before it has hardened. Store cylinders as required for concrete cylinders and test in the vertical position.

I. The compressive strength of masonry work shall be established by preliminary tests made in advance of the operations, using prisms of similar materials under the same conditions and insofar as possible, with the same bonding arrangement, mortar composition and joint thickness as for the structure. In building the prisms, the moisture content of the unit at time of laying, the consistency of the mortar, the workmanship and curing conditions shall be the same as will be used in the structure.

J. Test specimens shall be large enough to approximate the actual conditions in the finished structure, but small enough to facilitate handling and cutting to the size prisms required to fit the testing machines available. All tests shall be made in accord with the current governing building codes.

K. Ultimate compressive strength of the prisms shall be 2000 psi minimum.

L. Whenever there is any evidence that materials to be used in masonry construction do not conform to the Specifications, the material shall be tested for compliance before being used in the work.

M. All tests shall be made by the Agency's Testing firm..

N. If cores are removed from portions of the structure for testing, the holes shall be drypacked or otherwise repaired as instructed and the finish surfaces restored to original condition. In exposed finished concrete block surfaces, this shall require the removal of all block cut or otherwise damaged by the coring operation and the replacement of complete new CMU as approved.

O. If the member or portion of the structure fails to pass the tests, the Contractor shall make such changes or modifications as are necessary to provide strength required by the applicable codes as approved by the Code Authority.

P. All testing and replacement shall be paid for in accord with the Contract requirements.

3.09 CLEANING

A. Remove grout scum and grout stains from the CMU walls and all other surfaces immediately.

B. After CMU wall is constructed, do no saturate with water for curing or any other purpose.

C. Where atmosphere is dry, dampen CMU wall surface with a very light fog spray for 3 days.

PART 4 PAYMENT

Payment for the aforementioned applicable specifications for Concrete Masonry Units related to the storage building shall be considered as included within the Lump Sum (LS) price bid for the Storage Building, 5-units (890 SF) and no further payment will be allowed therefor.

END OF SECTION

SECTION 05 50 00 - METAL FABRICATIONS

PART 1 GENERAL

1.1 SECTION INCLUDES

A. Shop fabricated ferrous metal items.

1.2 FURNISH THE FOLLOWING FOR INSTALLATION BY OTHER TRADES

A. Abrasive stair nosings.

B. Other miscellaneous items not mentioned, but shown on the Drawings.

1.3 RELATED SECTIONS

A. Section 09 90 00 - Painting: Paint finish.

B. Section 03 30 00 - Cast-In-Place Concrete: Placement of metal fabrications in concrete.

C. Section 04 20 00 - Concrete Masonry Units: Placement of metal fabrications in CMU.

1.4 REFERENCES

A. AAMA 603.8 - Performance Requirements and Test Procedures for Pigmented Organic Coatings on Extruded Aluminum.

B. AAMA 605.2 - Specification for High Performance Organic Coatings on Architectural Extrusions and Panels.

C. AAMA 606.1 - Specifications and Inspection Methods for Integral Color Anodic Finishes for Architectural Aluminum.

D. AAMA 607.1 - Specifications and Inspection Methods for Clear Anodic Finishes for Architectural Aluminum.

E. AAMA 608.1 - Specification and Inspection Methods for Electrolytically Deposited Color Anodic Finishes for Architectural Aluminum.

F. ANSI A14.3 - Ladders, Fixed, Safety Requirements.

G. ASTM A 36 - Structural Steel.

H. ASTM A 53 - Hot-Dipped, Zinc-coated Welded and Seamless Steel Pipe.

I. ASTM A 123 - Zinc (Hot-Dip Galvanized) Coatings on Iron and Steel Products.

J. ASTM A 153 - Zinc Coating (Hot-Dip) on Iron and Steel Hardware.

K. ASTM A 283 - Carbon Steel Plates, Shapes, and Bars.

L. ASTM A 307 - Carbon Steel Bolts and Studs, 60,000 psi Tensile Strength.

M. ASTM A 500 - Cold-Formed Welded and Seamless Carbon Steel Structural Tubing in Round and Shapes.

N. ASTM A 501 - Hot-Formed Welded and Seamless Carbon Steel Structural Tubing.

O. ASTM B 26 - Aluminum-Alloy Sand Castings.

P. ASTM B 85 - Aluminum-Alloy Die Castings.

Q. ASTM B 177 - Chromium Electroplating on Steel for Engineering Use.

R. ASTM B 209 - Aluminum and Aluminum-Alloy Sheet and Plate.

S. ASTM B 210 - Aluminum-Alloy Drawn Seamless Tubes.

T. ASTM B 211 - Aluminum-Alloy Bar, Rod, and Wire.

U. ASTM B 221 - Aluminum-Alloy Extruded Bar, Rod, Wire, Shape, and Tube.

V. AWS A2.0 - Standard Welding Symbols.

W. AWS D1.1 - Structural Welding Code.

X. SSPC (Steel Structures Painting Council) - Steel Structures Painting Manual.

1.5 SUBMITTALS

A. Submit under the provisions specified by the owner.

B. Shop Drawings: Indicate profiles, sizes, connection attachments, reinforcing, anchorage, size and type of fasteners, and accessories. Include erection drawings, elevations, and details where applicable.

C. Indicate welded connections using standard AWS A2.0 welding symbols. Indicate net weld lengths.

1.6 QUALIFICATIONS

A. Prepare structural calculations, signed by a California-licensed structural engineer, to demonstrate Code compliance for railings.

B. Welders Certificates: Certifying welders employed on the Work, verifying AWS qualification within the previous 12 months.

1.7 QUALITY ASSURANCE

A. Qualifications for welding work: Qualify welding procedures and welding operators in compliance with AWS "Qualification" requirements of AWS D1.1.

B. Verify that welders to be employed in this work have satisfactorily passed AWS qualification tests.

B. If recertification of welders is required, retesting will be Contractor's responsibility.

D. Engineering responsibilities:

1. Certain metal assemblies are not fully detailed on the Drawings which indicate desired profile and design intent.
2. It is the Contractor's responsibility to engineer, fabricate and install these assemblies, and their connections, to conform to the profiles indicated and other requirements of the Contract Documents, and to satisfy applicable Codes. These connections shall not cause torsional stresses in supporting members.
3. If required by the Building Department, the Contractor shall obtain its approval and pay fees incurred thereby before start of installation.

PART 2 PRODUCTS

2.1 MATERIALS - STEEL

A. Steel Sections: ASTM A 36.

B. Steel Tubing: ASTM A 500, Grade B.

D. Wire rod for grating cross bars: ASTM A 510.

E. Plates: ASTM A 283

F. Pipe: ASTM A 53, Grade B

G. Uncoated structural steel sheet: Product type (manufacturing method), quality, and grade, as follows.

H. Cold-rolled structural steel sheet: ASTM A 611, Grade A, unless otherwise required by design loading.

I. Hot-rolled structural steel sheet: ASTM A 570, Grade 30, unless otherwise required by design loading.

J. Uncoated steel sheet: Commercial quality, product type (method of manufacture) as follows.

K. Cold-rolled steel sheet:

1. ASTM A 366.
2. Rolled steel floor plate (Checkered): ASTM A 786, Pattern No. 1, 4 or 5. Use same pattern throughout the Project.

L. Hot-rolled steel sheet: ASTM A 569.

M. Galvanized steel sheet:

1. Structural quality: ASTM A 446, grade A, G90 designation, unless another grade required for design loading.
2. Commercial quality: ASTM A 526, G 90 coating designation.

N. Fasteners:

1. Drilled-in expansion anchors: Expansion anchors complying with FS FF-S-325, Group VIII expansion anchors, Type I internally threaded tubular expansion anchors; and machine bolts complying with FS FF-B-575, Grade 5, by Hilti, Inc., ITW Ramset/Red Head, Star Expansion Co., or The Rawlplug Co., Inc.
2. Shot pins: FS FF-P-395 by Hilti, Inc. or ITW Ramset/Red Head.

O. Concrete inserts:

1. Threaded or wedge type galvanized ferrous castings, either malleable iron complying with ASTM A 47, or cast steel complying with ASTM A 27.
2. Provide bolts, washers, and shims as required, hot-dip galvanized in compliance with ASTM A 153.

P. Bolts, Nuts, and Washers: ASTM A 325 galvanized to ASTM A 153 for galvanized components.

Q. Welding Materials: AWS D1.1; type required for materials being welded.

R. Ladder rungs: Solid slip-resistant rungs; Slip-Not Round Ladder Rung by WS Molnar Co., Rugged Rungs by Safe-Walk, Inc., or Mebac by IKG Borden.

S. Shop and Touch-Up Primer and Paint:

1. Shop primer for ferrous metal: Manufacturer or fabricator standard, fast-curing, lead-free, universal modified alkyd primer selected for compatibility with finish paint systems specified in Section 09 90 00, and complying with performance requirements of FS TT-P645.
2. Galvanizing repair paint: Tneme-Zinc 90-97 by Tnemec Co., Amercoat 68HS by Ameron Protective Coating Division, or MZ-4 by Valspar Corp.
3. Bituminous paint: Cold-applied asphalt mastic complying with SSPC Paint 12, but containing no asbestos fibers.

2.2 MATERIALS - ALUMINUM

G. Bolts, Nuts, and Washers: galvanized to ASTM A 153.

H. Welding Materials: AWS D1.1; type required for materials being welded.

2.3 MANUFACTURED ITEMS

A. This section is not used.

2.4 FABRICATION

A. Fit and shop assemble items in largest practical sections, for delivery to site.

B. Fabricate items with joints tightly fitted and secured.

C. Continuously seal joined members by continuous welds.

D. Grind exposed joints flush and smooth with adjacent finish surface. Make exposed joints butt tight, flush, and hairline. Ease exposed edges to small uniform radius.

E. Exposed Mechanical Fastenings: Flush countersunk screws or bolts; unobtrusively located; consistent with design of component, except where specifically noted otherwise.

F. Supply components required for anchorage of fabrications. Fabricate anchors and related components of same material and finish as fabrication, except where specifically noted otherwise.

2.5 FABRICATION TOLERANCES

A. Squareness: 1/16 in. maximum difference in diagonal measurements.

B. Maximum Offset Between Faces: 1/16 in.

C. Maximum Misalignment of Adjacent Members: 1/16 in.

D. Maximum Bow: 1/16 in. in 48 in.

E. Maximum Deviation From Plane: 1/16 in. in 48 in.

2.6 FINISHES - STEEL

A. Prepare surfaces to be primed in accordance with SSPC SP 2.

B. Clean surfaces of rust, scale, grease, and foreign matter prior to finishing.

C. Do not prime surfaces in direct contact with concrete or where field welding is required.

D. Prime paint items with two coats.

E. Non-structural Items: Galvanized after fabrication to ASTM A 123. Provide minimum 2.0 oz./sq. ft. galvanized coating.

PART 3 EXECUTION

3.1 EXAMINATION

A. Verify that field conditions are acceptable and are ready to receive work.

3.2 PREPARATION

A. Clean and strip primed steel items to bare metal where site welding is required.

B. Supply steel items required to be cast into concrete or embedded in masonry with setting templates to appropriate sections.

3.3 INSTALLATION

A. Install items plumb and level, accurately fitted, free from distortion or defects.

B. Provide for erection loads, and for sufficient temporary bracing to maintain true alignment until completion of erection and installation of permanent attachments.

C. Field weld components indicated on Drawings.

D. Perform field welding in accordance with AWS D1.1.

E. Obtain approval prior to site cutting or making adjustments not scheduled.

F. After erection, prime welds, abrasions, and surfaces not shop primed or galvanized, except surfaces to be in contact with concrete.

3.4 ERECTION TOLERANCES

A. Maximum Variation From Plumb: 1/4 in. per story, non-cumulative.

B. Maximum Offset From True Alignment: 1/4 in.

C. Maximum Out-of-Position: 1/4 in.

PART 4 PAYMENT

Payment for the aforementioned applicable specifications for Metal Fabrication related to the storage building shall be considered as included within the Lump Sum (LS) price bid for Storage Building, 5-units (890 SF) and no further payment will be allowed therefor.

END OF SECTION

SECTION 06 16 00 - FRAMING AND SHEATHING

PART 1: GENERAL

1.01 SECTION INCLUDES

A. Structural roof framing.

B. Roof sheathing.

C. Preservative treatment of wood.

D. Miscellaneous framing and sheathing.

1.02 RELATED SECTIONS

A. Section 04 22 00: Concrete Masonry Units.

1.03 REFERENCES

A. AHA (American Hardboard Association) A135.4 - Basic Hardboard.

B. ALSC (American Lumber Standards Committee) - Softwood Lumber Standards.

C. ANSI A208.1 - Mat-Formed Wood Particleboard.

D. APA (American Plywood Association).

E. AWPA (American Wood Preservers Association) C1 - All Timber Products - Preservative Treatment by Pressure Process.

F. AWPA (American Wood Preservers Association) C20 - Structural Lumber Fire Retardant Treatment by Pressure Process.

G. NFPA (National Forest Products Association).

H. RIS (Redwood Inspection Service).

I. WCLIB (West Coast Lumber Inspection Bureau).

J. WWPA (Western Wood Products Association).

1.04 SUBMITTALS

A. Product samples need not be submitted to the Engineer if the item to be used is listed in the specifications, however, the supplier or manufacture cut-sheets for all specified items is required for submittal.

B. Product Data: Provide technical data on insulated sheathing, wood preservative materials, and application instructions.

C. Manufacturer's Certificate: Certify that Products conform to specified requirements.

1.05 QUALITY ASSURANCE

A. Perform Work in accordance with the following agencies:

1. Lumber Grading Agency: Certified by ALSC.

2. Plywood Grading Agency: Certified by APA.

B. In lieu of grade stamping exposed to view lumber and plywood, submit manufacturer's certificate certifying that products meet or exceed specified requirements.

PART 2: PRODUCTS

2.01 LUMBER MATERIALS

A. Framing lumber:

1. S4S grade-marked Douglas Fir/Larch, of the grades and sizes indicated on the Drawings, manufactured and graded according to WCLIB or WWPA rules.

2. Sizes indicated are nominal. Actual sizes shall conform to PS 20.

3. Lumber up to 2 in. thick shall be seasoned to a moisture content of 19% or less and be stamped "S-Dry." Lumber over 2 in. thick can be shipped unseasoned and stamped "S-Green."

4. For exposed framing lumber provide material complying with the following requirements:

a. Definition: Exposed framing refers to dimension lumber that is not concealed by other construction and is indicated to receive a stained or natural finish.

b. Grading: Material hand-selected at factory from lumber of species and grade indicated below that complies with "Appearance" grade requirements of ALSC National Grading Rule; issue inspection certificate of inspection agency for selected material.

5. Unless otherwise indicated, provide lumber of same species and grade as indicated for structural framing.

B. Grade stamp:

1. Provide lumber with each piece factory-marked with grade stamp of inspection agency evidencing compliance with grading rule requirements and identifying grading agency, grade, species, moisture content at time of surfacing, and mill.

2. For lumber which will remain exposed, furnish pieces with grade stamp applied to ends or back of each piece; or omit grade stamp entirely and provide certificates of grade compliance issued by inspection agency.

2.02 SHEATHING MATERIALS

A. Plywood sheathing: APA grade-stamped Douglas fir plywood of the grades indicated on the Drawings and complying with US Product Standard PS-1. Plywood used as a substrate for elastomeric coating must be tongue & grooved.

2.03 FACTORY WOOD TREATMENT

A. Lumber and plywood in contact with concrete or masonry and at other locations required by Code shall be pressure treated in compliance with AWPA C-2 for lumber, and AWPA C-9 for plywood, using water-borne preservatives (LP-2).

B. Kiln-dry to 15% moisture content after treatment. Each piece of wood shall be stamped by the wood preservative applicator to indicate and identify its treatment.

2.04 ACCESSORIES

A. Builder's rough hardware: Verify that fasteners for pressure-treated wood will not corrode due to treatment materials used in the manufacture or present at time of use when in the presence of moisture. Use hot-dip galvanized or stainless steel fasteners where carpentry will remain exposed to the weather.

B. Nails and staples: Size and type complying with Code unless otherwise indicated. Use annular or screw nails for floor sheathing.

C. Bolts, washers, lag bolts and wood screws: Galvanized or cadmium-plated steel of standard manufacture.

D. Metal framing accessories:

1. Code approved galvanized or cadmium-plated steel joist hangers, framing anchors, fasteners and other such connection devices of standard manufacture and of the types indicated. Use offset and skewed hangers, as required.

2. Nails to be used with framing accessories shall be those furnished by the manufacturer with the framing accessories.

3. Anchor bolts: ASTM A 307, non-headed type.

PART 3: EXECUTION

3.01 FRAMING

A. Set structural members level and plumb, in correct position.

B. Make provisions for erection loads, and for sufficient temporary bracing to maintain structure safe, plumb, and in true alignment until completion of erection and installation of permanent bracing.

C. Place horizontal members, crown side up.

D. Construct load bearing framing members full length without splices.

3.02 SHEATHING

A. Secure roof sheathing with longer edge perpendicular to framing members and with ends staggered and sheet ends over bearing.

B. Fully engage tongue and groove edges.

PART 4: PAYMENT

Payment for the aforementioned applicable specifications for Framing and Sheathing related to the storage building shall be considered as included within the Lump Sum (LS) price bid for Storage Building, 5-units (890 SF) and no further payment will be allowed therefor.

END OF SECTION

SECTION 07 62 00 - SHEET METAL FLASHING AND TRIM

PART 1: GENERAL

1.01 SECTION INCLUDES

A. Overflow scuppers.

B. Gravel stops.

C. Gutters, conductor heads and downspouts.

D. Copings.

E. Pitch pans.

F. Roof drain lead flashings.

G. Flashing collars for roof screen supports.

H. Air intake louver.

I. Elevator shaft gravity roof vents.

J. Prefabricated counterflashing assemblies and curbs.

K. Prefabricated sheet metal roof expansion joint covers.

L. All other flashings and sheet metal items shown or required to make the building weathertight and not specified in other Sections.

1.02 RELATED SECTIONS

B. Section 07 90 00 - Joint Sealers.

C. Section 09 90 00 - Painting: finish painting.

1.03 REFERENCES

A. AISI (American Iron and Steel Institute) - Stainless Steel - Uses in Architecture.

B. ASTM A 167 - Stainless and Heat-Resisting Chromium-Nickel Steel Plate.

C. ASTM A 525 - Steel Sheet, Zinc Coated, (Galvanized) by the Hot-Dip Process.

D. ASTM B 32 - Solder Metal.

E. ASTM B 209 - Aluminum and Alloy Sheet and Plate.

F. ASTM B 370 - Copper Sheet and Strip for Building Construction.

G. ASTM B 486 - Paste Solder.

H. ASTM D 226 - Asphalt-Saturated Organic Felt Used in Roofing and Waterproofing.

I. ASTM D 4586 - Asphalt Roof Cement, Asbestos-Free.

J. CDA (Copper Development Association) - Contemporary Copper, A Handbook of Sheet Copper Fundamentals, Design, Details and Specifications.

K. CDA - Copper Roofing - A Practical Handbook.

L. FS O-F-506 - Flux, Soldering, Paste and Liquid.

M. NRCA (National Roofing Contractors Association) - Roofing Manual.

N. SMACNA - Architectural Sheet Metal Manual.

1.04 SUBMITTALS

A. Manufacturer's data: Submit printed specifications, installation instructions and general recommendations for installation of prefabricated assemblies.

B. Shop drawings: Submit the following.

1. Large scale, dimensioned shop drawings for all sheet metal work showing details of fabrication and installation, methods of joining and fastening, and all other pertinent data.

2. For interface between flashings with different profiles, and conditions difficult to illustrate in 2-dimension, furnish isometric drawings.

3. Detail interface with adjacent materials.

1.05 QUALITY ASSURANCE

A. Reference standard: The applicable provisions of the Architectural Sheet Metal Manual published by Sheet Metal and Air Conditioning Contractors National Association, Inc. (SMACNA) govern the work of this Section, except as noted.

B. Fabricator and Installer: Company specializing in sheet metal flashing work with 5 years experience.

C. Design criteria:

1. Design (within the dimensional limitations indicated), engineer, fabricate and install to meet Code requirements.

2. Obtain the Building Department's approval of the shop drawings and structural calculations before submitting.

1.06 PRE-INSTALLATION CONFERENCE

A. Convene one week prior to commencing work of this section.

1.07 DELIVERY, STORAGE, AND HANDLING

A. Stack preformed [and prefinished] material to prevent twisting, bending, or abrasion, and to provide ventilation. Slope metal sheets to ensure drainage.

B. Prevent contact with materials which may cause discoloration or staining.

1.08 COORDINATION

B. Coordinate all work with the other trades.

PART 2: PRODUCTS

2.01 MATERIALS

A. Sheet steel: Commercial quality carbon steel sheets complying with ASTM A 526, except A 527 for lock-forming; hot-dip galvanized to comply with ASTM A 525, G 90; 24 gage minimum unless otherwise indicated.

B. Sheet steel: Stainless steel, ASTM A 167, dead soft, fully annealed, AISI No. 2D non-reflective finish, 0.015 in. thick unless noted otherwise.

C. Zinc-alloy: ASTM B 69, not less than 95% zinc, 0.6% Copper and 0.14% titanium; standard (soft) temper), cold-rolled, 0.032 in. thick.

D. Copper: ASTM B 370, cold-rolled, 16 oz./sq. ft., CDA 2B finish.

E. Aluminum:

1. Sheet aluminum: ASTM B 209.
2. Aluminum extrusions: ASTM B 229.

F. Sheet lead for roof drains: 4 lbs./sq. ft., ASTM B 29 desilverized pig lead.

G. Nails:

1. For attaching sheet steel to wood: Large flat head "stronghold" type roofing nails with barbed point, formed of hot-dip galvanized steel of sufficient length to penetrate a minimum of 1 in. into the wood nailer.

2. For attaching sheet steel to concrete: 1-1/4 in. x 8d hot-dip galvanized hardened steel nails with lead washers.

H. Sheet metal fasteners: Hot-dip galvanized steel rivets, screws and bolts.

I. Sheet metal fasteners: Stainless steel rivets, screws and bolts.

J. Fasteners for copper: Copper or bronze nails, rivets and bolts.

K. Solder and flux: 50-50 lead/tin solder complying with ASTM B 32, used with a non-corrosive flux.

L. Solder and flux: Complying with ASTM B 32, as recommended by the stainless steel producer, used with a non-corrosive rosin flux over tinned surfaces.

M. Stainless steel welding rods: Type recommended by the stainless steel producer.

N. Insect screens: 14 x 18 mesh, 0.063 in. diameter aluminum wire crimped screen material.

O. Strainer units for conductor heads: Removable bee-hive design fabricated from 0.062 in. diameter galvanized steel wire or wire mesh with openings not more than 1/2 in.

P. Sealant and back-up: As specified in Section 07 90 00.

Q. Roofing cement: Asphalt base complying with ASTM D 2822, Type I.

2.02 PREFABRICATED ASSEMBLIES

A. Counterflashing assemblies: Springlok Flashing System by Fry Reglet Corp., or equal by Keystone Flashing Co., or CF Cheney Flashing Co., formed of 24 gage galvanized sheet steel, of the profiles shown on the Drawings, complete with factory-formed internal and external corners, and end closures.

B. Gravity roof vents: Extruded and cold-formed aluminum assemblies by Bristol Fiberlite Industries or equal. Provide with insect screen in removable aluminum steel frame. Refer to Drawings for model number.

C. Sheet metal curbs:

1. Of the sizes and profiles indicated, by Thybar Corp., Pate Co. or Custom Curb, Inc., with an 18 gage galvanized steel shell and base plate fully welded, factory installed insulation, and continuous wood nailer.

2. Reinforce curb as required to safely support the equipment thereon.

D. Extruded aluminum copings:

1. Custom extrusions formed to the profiles and dimensions indicated in the longest possible length. Make curved sections of uniform profile without causing grain separation.

2. Miter and weld corners with adjacent joints a minimum of 2 ft. from the corner. Make all joints with concealed splice plates.

3. Fabricate so that when assembled the fasteners will be concealed from public spaces.

2.03 FABRICATION

A. General:

1. Shop fabricate flashings and sheet metal work to comply with profiles and sizes indicated on the Drawings and standard SMACNA detail plates of the "Architectural Sheet Metal Manual."

2. Form sheet metal on bending brake with straight, sharp edges. Shape, trim, and hand seam sheet metal on bench; keep job site forming to a minimum.

3. Comply with metal producers' recommendations for tinning, soldering, and cleaning flux from metal.

4. Fabricate with joints and corners accurately machined, filed and fitted, and rigidly framed together and connected.

B. Tinning and soldering:

1. Tin edges on both sides of sheet steel to be soldered.

2. Perform soldering slowly, thoroughly heating seams and completely sweating solder through full width of seams.

C. Exposed edges: Neatly double back sheet metal 1/2 in. to stiffen edges and to provide a finished appearance.

D. Provisions for attachment to structure: Furnish supports, hangers, bracing, anchors and other devices shown, specified or necessary for reinforcement and proper attachment of flashings and sheet metal to building.

PART 3: EXECUTION

3.01 INSPECTION

A. Verify conditions and measurements affecting the work of this Section at site. Make sure that detrimental conditions are corrected before proceeding with installation.

3.02 GENERAL REQUIREMENTS

A. Comply with manufacturer's instructions and recommendations for handling and installing prefabricated sheet metal assemblies.

B. Install counterflashing assemblies at a constant height above the roof.

C. Make sure that counterflashing is securely anchored into reglet by friction, or provide lead wedges spaced 2 ft. o.c. maximum.

D. Use manufacturer's standard splice plates and preformed corners for a weathertight assembly.

E. Install curbs and gravity roof vents level and square with tight, waterproof joints; attach securely to deck.

F. Coordinate this work with other trades whose work penetrates, intersects and adjoins flashings and sheet metal work, to permit the correct sequencing and the watertightness of the assemblies.

3.03 INSTALLATION

A. General:

1. Comply with the approved shop drawings and SMACNA Architectural Sheet Metal Manual recommendations for installation.

2. Attach this work securely to supporting construction, plumb, level, with tight, flush joints.

3. Install with lines, arises, and angles sharp and true.

4. Fold exposed edges neatly to form a 1/2 in. hem on the concealed side; hem all exposed edges, unless otherwise indicated.

5. Assemble work so that face of metal in contact have hairline joints, except where required for expansion or fitting.

6. Conceal fastenings and reinforcement where they would be visible by the public and the building occupants.

B. Soldering: Clean material and tin prior to soldering. Solder with heavy coppers properly tinned before use.

1. Solder slowly. Heat the seams thoroughly, and completely fill with solder.

2. Make exposed soldering on finish surfaces neatly, full flowing and smooth.

3. Wash acid flux with a soda solution after soldering and remove soldering flux on exposed surfaces.

C. Nailing:

1. Confine nailing of sheet metal generally to sheet metal having a maximum width of 18 in. Nailing of flashings shall be confined to one edge only.

2. Space nails evenly not over 12 in. o.c., and approximately 1/2 in. from edge.

3. Face nailing is not permitted.

4. Where sheet metal is applied to surfaces other than wood, furnish detailed shop drawings showing locations of required sleepers and nailing strips.

D. Cleats:

1. Provide cleats for sheet metal 18 in. and over in width. Space cleats evenly not over 12 in. o.c.

2. Make cleats not less than 2 in. wide x 3 in. long, and of the same material and thickness as the sheet metal being installed.

3. Secure one end of the cleat with 2 nails and the cleat folded back over the nail heads. Lock the other end into the seam. Pre-tin cleats for soldered seams.

E. Bolts, rivets, and screws:

1. Install bolts, rivets, and screws where indicated or required.

2. Provide compatible washers to protect surface of sheet metal and to provide a watertight connection.

F. Dissimilar material protection:

1. Protect sheet metal in contact with dissimilar metals, concrete, masonry and plaster with a heavy coating of bituminous paint, approved separation tape, or building felt or paper.

2. Set copings and other sheet metal assemblies supported by pressure-treated wood on building paper or felt attached to the wood nailer.

G. Seams:

1. General: Make seams straight, and uniform in width and height with no solder showing on the face.

2. Flat-lock seams: Finish not less than 3/4 in. wide made in the direction of water flow.

3. Lap seams: Finish soldered seams not less than 1 in. wide. Overlap seams not soldered not less than 3 in.

4. Loose-lock expansion seams: No less than 3 in. wide, designed to provide minimum 1 in. movement within the joint. Fill joint completely with sealant applied at not less than 1/8 in. thick bed.

5. Standing seams: Not less than 1 in. high, double locked without solder.

H. Expansion and contraction:

1. Provide for thermal and building movement without overstressing the material, breaking connections or producing wrinkles and distortion in finished surfaces. Make sheet metal installations weathertight at all locations.

2. Provide expansion and contraction joints at not more than 40 ft. intervals, except that where the distance between the last expansion joint and the end of the continuous run is more than half the required interval spacing, provide an additional joint. Where expansion and contraction joints are exposed to view.

3. Exposed surfaces shall be free from visible wave, warp, and buckle.

4. Vulcanize joints of the roof expansion joint covers and lap the sheet metal portion, after sealing for watertightness.

I. Completed work: Completed flashings and sheet metal work shall be watertight, free of tool marks, dents, scratches and other damages, with joints and corners accurately machined, filed and fitted, and rigidly framed together and connected.

PART 4: PAYMENT

Payment for the aforementioned applicable specifications for Sheet Metal Flashing and Trim related to the storage building shall be considered as included within the Lump Sum (LS) price bid for Storage Building, 5-units (890 SF) and no further payment will be allowed therefor.

END OF SECTION

SECTION 07 90 00 - JOINT SEALERS

PART 1: GENERAL

1.01 SECTION INCLUDES

A. This Section includes joint sealants for the following locations:

1. Exterior joints in vertical surfaces and non-traffic horizontal surfaces as indicated below:

   a. Joints between architectural precast concrete units.
   b. Control and expansion joints in unit masonry.
   c. Joints of stonework, except those set with mortar.
   d. Joints between different materials listed above.
   e. Perimeter joints between materials listed above and frames of doors and glazed assemblies.
   f. Other joints as indicated and required to make the building weathertight.

2. Interior joints in vertical surfaces and horizontal non-traffic surfaces as indicated below:

   a. Control and expansion joints on exposed interior surfaces of exterior walls.
   b. Perimeter joints of exterior openings where indicated.
   c. Joints between tops of non-load-bearing unit masonry walls and underside of cast-in-place concrete slabs and beams.
   d. Tile control and expansion joints.
   e. Vertical control joints on exposed surfaces of interior unit masonry and concrete walls and partitions.
   f. Perimeter joints between interior wall surfaces and frames of interior doors, windows, and elevator entrances.
   g. Perimeter joints of toilet fixtures.
   h. Other joints as indicated.

1.02 RELATED SECTIONS

A. Section 04 20 00: Sealants required in conjunction with Concrete masonry.

1.03 REFERENCES

A. ASTM C 790 - Use of Latex Sealing Compounds.

B. ASTM C 804 - Use of Solvent-Release Type Sealants.

C. ASTM C 834 - Latex Sealing Compounds.

D. ASTM C 919 - Use of Sealants in Acoustical Applications.

E. ASTM C 920 - Elastomeric Joint Sealants.

F. ASTM D 1056 - Flexible Cellular Materials - Sponge or Expanded Rubber.

G. ASTM D 1565 - Flexible Cellular Materials - Vinyl Chloride Polymers and Copolymers (Open-Cell Foam).

H. SWRI (Sealant, Waterproofing and Restoration Institute) - Sealant and Caulking Guide Specification.

1.04 SUBMITTALS

A. Manufacturer's data sheets and published instructions for each type of sealant, backing, bond breaker, and other accessory materials, together with statement that the proposed materials comply with these Specifications.

B. Sealant manufacturer's certification that sealants, backing rods, and other materials proposed for use in the application of sealants, are chemically compatible with the materials which will come in contact with the sealants and will not cause deterioration, premature aging and staining of adjacent materials, or the sealants.

C. Product samples need not be submitted to the Engineer if the item to be used is listed in the specifications, however, the supplier or manufacture cut-sheets for all specified items is required for submittal.

D. Cured samples of the various types and colors of materials proposed for use, approximately 12 in. long, mounted on hardboard backing. Note that final color selection of sealants for exterior locations will be made at the job site as specified below.

1.05 QUALITY ASSURANCE

A. Uniformity: All sealants used in or on the exterior walls of the building shall be made by the same manufacturer.

B. Installer's qualifications: Firm with a minimum 5 years of experience with joint sealant applications similar in material, design, and extent to that indicated for Project that have resulted in construction with a record of successful in-service performance.

C. Color selection:

1. Final color selection of sealants to be used for exterior locations will be made by the Engineer from job-applied samples on in-place materials.

2. Locations and extent of these samples will be selected by the Engineer, but length of sealant joints will not exceed 20 ft. for vertical surfaces and 10 ft. for horizontal surfaces.

1.06 HANDLING

A. Store sealant containers in a protected location in compliance with their manufacturer's printed instructions until their use. Do not store at temperature higher than 80 deg. F.

B. Do not use sealants whose shelf life has expired.

1.07 JOB CONDITIONS

A. Do not install sealants under adverse weather conditions, or when temperatures are beyond manufacturer's recommended limits.

B. Proceed with the installation only when forecasted weather conditions are favorable for proper sealant cure and development of early bond strength.

C. Where joint width is affected by ambient temperature variations, install sealants only when temperatures are in the lower third of manufacturer's recommended installation temperature range, so that sealant will not be subjected to excessive elongation and bond stress at low temperatures.

1.08 WARRANTY

A. Warrant sealants against defective materials and work- manship for 5 years after Substantial completion.

B. Warranty shall further state that installed sealants are warranted against the following:

1. Water leakage through sealed joints.

2. Adhesive or cohesive failure of sealant.

3. Staining of adjacent surfaces caused by migration of sealants or primer.

4. Chalking or visible color change of the cured sealants.

C. Make repairs during the warranty period at no cost to the Agency.

PART 2: PRODUCTS

2.01 MATERIALS

A. Colors: Match sealant color to color of adjacent materials as closely as possible using colors selected from the manufacturer's standard palette, as approved by the Engineer.

B. Compatibility: Verify that selected sealants will not cause staining, degradation and premature aging of the adjacent surfaces and the sealant itself when in contact with these surfaces.

C. Bulk sealants:

1. For interior and exterior horizontal application subject to pedestrian or vehicular traffic:
One of the following with a cured Shore A hardness of 35 minimum.

   a. Mameco International, Inc.: Vulkem 227.
   b. Pecora Corp.: Dynatred.
   c. Tremco Mfg. Co.: THC-900/901.
   d. Sika Corp.: Sikaflex-2c SL.
   e. Bostick Construction Products Div.: Chem-Calk 550 or 950.

2. For all other exterior applications:

   a. General Electric Corp.: Silpruf.
   b. Dow Corning Corp.: 790 or 795.
   c. Pecora Corp.: 890 or 895.
   d. Tremco Corp.: Spectrem I or Spectrem II.

3. For interior damp, wet and semi-wet locations, other than floors, such as toilet rooms where a mildew-resistant sealant is required: Provide white sealant, unless otherwise noted.

   a. General Electric Corp.: 1700.

b. Dow Corning Corp.: 786.
c. Sonneborn Building Products: Sonolastic OmniPlus.
d. Pecora Corp.: 898.
e. Tremco: Proglaze.

4. Acoustical sealant:

a. Pecora Corp.: BA-98.
b. US Gypsum Co.: Sheetrock Acoustical Sealant.
c. Tremco, Inc.: Acoustical Sealant.
d. WW Henry Co.: Henry 313.

5. For interior stone veneer: Same as specified for exterior vertical surfaces.

6. For all other interior vertical applications:

a. Tremco: Acrylic Latex 384.
b. Pecora Corp.: AC-20.
c. Sonneborn Building Products: Sonolac.

D. Tape sealants:

1. Norton Specialties Plastics Div.: Norseal 730 or 770.

2. Protective Treatments Inc.: PTI 606.

3. Or equal.

E. Miscellaneous materials:

1. Joint cleaner, primer and sealer: As recommended by the sealant manufacturer, for the surfaces to be cleaned, primed or sealed.

2. Bond breaker tape: Polyethylene or other plastic tape recommended by the sealant manufacturer to prevent 3-sided adhesion where backer rod cannot be used. Use self-adhering tape wherever possible.

F. Sealant backer rod:

1. Compressible rod stock formed of closed-cell polyethylene foam, polyethylene jacketed polyurethane foam, butyl rubber foam, neoprene foam or other flexible, permanent, durable non-absorptive material recommended by the sealant manufacturer.

2. Provide size and shape of rod which will control the joint depth for sealant placement, break bond of sealant at bottom of joint, form optimum shape of sealant bead on back, and provide a highly compressible backer to minimize the possibility of sealant extrusion when joint is compressed.

PART 3: EXECUTION

3.01 INSPECTION

A. Verify conditions and measurements affecting the work of this Section at site. Make sure that detrimental conditions are corrected before proceeding with installation.

3.02 JOINT PREPARATION

A. Surface cleaning of joints: Clean out joints immediately before installing sealants to comply with recommendations of joint sealant manufacturer and the following.

B. Remove foreign material from joint substrates that could interfere with adhesion of sealant, including dust, paints (except for permanent, protective coatings tested and approved for sealant adhesion and compatibility by sealant manufacturer), old joint sealants, oil, grease, waterproofing, water repellents, water, surface dirt, and frost.

C. Clean concrete, masonry, unglazed surfaces of ceramic tile, and similar porous joint substrate surfaces by brushing, grinding, blast cleaning, mechanical abrading, or a combination of these methods to produce a clean, sound substrate capable of developing optimum bond with joint sealants. Remove loose particles remaining from above cleaning operations by vacuuming or blowing out joints with oil-free compressed air.

D. Remove laitance and form release agents from concrete.

E. Clean metal, glass, glazed surfaces of ceramic tile, and other non-porous surfaces with chemical cleaners or other means that do not stain, harm substrates, or leave residues capable of interfering with adhesion of joint sealants.

F. Do not proceed with sealant installation over surfaces that have been painted, lacquered, waterproofed or treated with water-repellent or other coating unless specifically approved in writing by the sealant manufacturer.

G. Use masking tape or other protection to limit coverage of sealant to joints to be sealed. Remove tape immediately after tooling without disturbing joint seal.

3.03 INSTALLATION

A. Comply with sealant manufacturer's printed instructions and ASTM C 1193, except where more stringent requirements are specified herein. At the Engineer's option, ASTM C 1193 may also be used for rejection of unacceptable installations.

B. Prime or seal surfaces when recommended by the sealant manufacturer; when the manufacturer's instructions on priming are optional, prime the surface. Do not allow primer/sealer to spill or migrate onto adjacent surfaces.

C. Install backer rod for all sealants, except (a) for exterior sealants subject to traffic (verify that joint filler in paving is installed at the proper depth), (b) where the size of joint prevents the insertion of a backer rod, and (c) where recommended otherwise by the sealant manufacturer.

D. Install backer rods with blunt or rounded tools to avoid puncturing the material.

E. Do not twist, stretch or braid the backer rod.

F. Install bond breaker tape where space limitation does not permit use of a backer rod.

G. Employ only proven installation techniques which will ensure that sealants are installed in uniform, continuous ribbons without gaps or air pockets and with complete "wetting" of the rabbet surfaces equally on opposite sides.

H. Fill rabbets to a slightly concave surface just below adjacent surfaces.

I. Where horizontal joints occur between horizontal and vertical surfaces, fill joints to form a slight cove to prevent trapping moisture and dirt.

J. Immediately after sealant application and prior to beginning of skinning or curing, tool all sealants using tooling agents that will not discolor sealants or adjacent surfaces and are approved by sealant manufacturer.

K. Install sealants as recommended by the sealant manufacturer but within the following general limitations, measured at the center (thin) section of the bead.

L. For sidewalks, pavements and similar joints subject to traffic and other abrasions and indentation exposures: Fill joints to a depth equal to 75% of joint width, but not less than 3/8 in. deep or more than 5/8 in. deep.

M. For normal moving joints not subject to traffic: Fill joints to a depth equal to 50% of joint width, but not less than 1/4 in. deep or more than 1/2 in. deep.

N. Size sealant tape to be at least twice the size of the joint to be sealed, unless recommended otherwise by the manufacturer.

O. Do not allow sealants or other compounds to overflow, spill or migrate into voids of adjacent construction.

P. Remove excess sealant spillage promptly as this work progresses. Clean adjacent surfaces by recommended means to remove sealant, but not damage the surfaces.

3.04 CURING/PROTECTING

A. Cure sealants in compliance with their manufacturer's printed instructions to obtain high early bond strength, internal cohesive strength and durability.

B. Protect sealants during and after curing period from contact with contaminating substances or from damage resulting from construction operations or other causes so that they are without deterioration or damage at time of Substantial Completion.

C. If, despite such protection, damage or deterioration occurs, cut-out and remove damaged or deteriorated joint sealants immediately so that and installations with repaired areas are indistinguishable from original work.

PART 4: PAYMENT

Payment for the aforementioned applicable specifications for Joint Sealers related to the storage building shall be considered as included within the Lump Sum (LS) price bid for Storage Building, 5-units (890 SF) and no further payment will be allowed therefor.

END OF SECTION

SECTION 07 95 00 - EXPANSION CONTROL

PART 1: GENERAL

1.01 SECTION INCLUDES

A. Expansion joint assemblies for floor surfaces.

1.02 PRODUCTS FURNISHED BUT NOT INSTALLED UNDER THIS SECTION

A. Section 03 10 00 - Concrete Formwork: Placement of joint assembly frames in formwork.

1.03 RELATED SECTIONS

A. Section 03 30 00 - Cast-in-Place Concrete: Expansion and contraction joints in exterior concrete joints and junction of concrete slab-on-grade and perimeter walls.

B. Section 07 90 00 - Joint Sealers: Expansion and control joint finishing utilizing a sealant and bond breaker.

1.04 REFERENCES

A. No references this section.

1.05 SUBMITTALS

A. Shop Drawings: Indicate joint and splice locations, miters, layout of the work, affected adjacent construction, anchorage locations.

B. Product Data: Provide joint assembly profiles, profile dimensions, anchorage devices available colors and finish.

C. Product samples need not be submitted to the Engineer if the item to be used is listed in the specifications, however, the supplier or manufacture cut-sheets for all specified items is required for submittal.

1.06 FIELD MEASUREMENTS

A. Verify that field measurements are as instructed by the manufacturer.

PART 2: PRODUCTS

2.01 MANUFACTURERS

A. BoMetals, Inc. or equivalent

2.02 MATERIALS

A. Resilient Filler: Extruded vinyl.

2.03 FABRICATION

A. Joint Covers: resilient vinyl filler strip, designed to permit plus or minus 50 percent joint movement with full recovery, flush mounted.

B. Provide joint components in single length wherever practical. Minimize site splicing.

2.04 FINISHES

A. Floors: Mill finish.

C. Resilient Filler Exposed to View: Gray.

PART 3: EXECUTION

3.01 EXAMINATION

A. Verify that joint preparation and affected dimensions are acceptable.

3.02 PREPARATION

A. Provide anchoring devices for installation.

B. Provide templates and rough-in measurements.

3.03 INSTALLATION

A. Install components and accessories in accordance with manufacturer's instructions.

B. Align work plumb and level, flush with adjacent surfaces.

C. Rigidly anchor to substrate to prevent misalignment.

3.04 PROTECTION OF FINISHED WORK

A. Do not permit traffic over unprotected floor joint surfaces until materials have completely cured, General Contractor shall be responsible for maintaining a continuous protective surface.

B. Provide removable surface protection to protect finish surface at all times until new surfaces have completely cured and are ready to except traffic.

PART 4: PAYMENT

Payment for the aforementioned applicable specifications for Expansion Control related to the storage building shall be considered as included within the Lump Sum (LS) price bid for Storage Building, 5-units (890 SF) and no further payment will be allowed therefor.

END OF SECTION

SECTION 09 90 00 - PAINTING

PART 1: GENERAL

1.01 SECTION INCLUDES

A. Surface preparation and field application of paints and coatings.

1.02 REFERENCES

A. ASTM D 16 - Definitions of Terms Relating to Paint, Varnish, Lacquer, and Related Products.

B. ASTM D 2016 - Test Method for Moisture Content of Wood.

C. AWWA (American Water Works Association) - C204 - Chlorinated Rubber-Alkyd Paint Systems for the Exterior of Above Ground Steel Water Piping.

D. AWWA (American Water Works Association) - D102 - Painting Steel Water Storage Tanks.

E. NACE (National Association of Corrosion Engineers) - Industrial Maintenance Painting.

F. NPCA (National Paint and Coatings Association) - Guide to U.S. Government Paint Specifications.

G. PDCA (Painting and Decorating Contractors of America) - Painting - Architectural Specifications Manual.

H. SSPC (Steel Structures Painting Council) - Steel Structures Painting Manual.

1.03 DEFINITIONS

A. Conform to ASTM D 16 for interpretation of terms used in this Section.

1.04 SUBMITTALS

A. Materials:

1. Submit copies of a complete materials list, identified by manufacturer's name and product label or stock number.

2. Prepare list in the form of a repetition of the specified paint finishes, with the addition of the specific product intended for each coat.

B. Color samples:

1. Submit 8-1/2 in. x 11 in. samples of each color for painted finishes.

2. For transparent finishes, submit the samples on wood specie which will be used for the Project; 12 in. for lumber and 12 in. square for veneered panels.

D. Certification: Submit duplicate copies of manufacturer's affidavit with each shipment of materials delivered to the job site certifying that each material furnished complies with specified requirements.

1.05 QUALIFICATIONS

A. Manufacturer: Company specializing in manufacturing the Products specified in this section with minimum 5 years documented experience.

B. Applicator: Company specializing in performing the work of this section with minimum 5 years documented experience.

1.06 REGULATORY REQUIREMENTS

A. Conform to UBC for flame and smoke rating requirements for finishes.

B. Compliance with air quality regulations: VOC of coatings used for this work shall not exceed limits prescribed by law.

1.07 FIELD SAMPLES

A. Provide field sample of each type and color of paint.

B. Apply sample paint finishes approximately 10 ft. square of each color scheme to wall areas, as directed by the Engineer.

C. Obtain Engineer's approval of sample panels before proceeding further. Approved sample panels will be used as a standard for the Project, and if properly identified may remain a part of the Work.

D. Final acceptance of colors will be from job-applied samples.

1.08 DELIVERY, STORAGE, AND HANDLING

A. Deliver products to site in sealed and labeled containers; inspect to verify acceptability.

B. Container label to include manufacturer's name, type of paint, brand name, lot number, brand code, coverage, surface preparation, drying time, cleanup requirements, color designation, and instructions for mixing and reducing.

C. Store paint materials at minimum ambient temperature of 45°F and a maximum of 90°F, in ventilated area, and as required by manufacturer's instructions.

D. Take all necessary precautions to prevent fire. Remove soiled rags and other waste items from premises at end of each day's work.

1.09 ENVIRONMENTAL REQUIREMENTS

A. Comply with paint manufacturer's recommendations for environmental conditions regarding paint application. Provide adequate heating and ventilating to maintain environmental conditions recommended by paint manufacturer.

B. Do not apply finish in areas where dust is being generated.

C. Provide drop cloths, shields, barricades and other protection necessary to safeguard adjacent surfaces not to be painted.

D. Post signs immediately after painting.

E. Provide and maintain protection as required to protect finished work from damage until its acceptance.

F. Illuminate work area during installation to provide the same or greater level of illumination, as required to properly perform the work, as will occur in the room or space after the building is in operation.

1.10 EXTRA MATERIALS

A. With close-out submittals deliver one identified unopened gallon of each type and color of paint material used on the Project to the Engineer for future paint touch-up.

B. Identify with items to be painted, type of paint, color and sheen, as applicable, for future identification.

1.11 WARRANTY

A. Color of exterior surfaces painted as part of the Work of this Section shall, at the end of one year, have remained free from serious fading when compared to a control sample of the original paint.

B. Paint shall have its original adherence at the end of one year and there shall be no evidence of blisters, running, peeling, scaling, chalking, streaks, or stains at the end of this period.

C. Washing painted surfaces with alkali-free soap and water shall remove surface dirt from painted surfaces without producing deteriorating effects.

PART 2: PRODUCTS

2.01 PAINT

A. Definition: The term "paint" as used in this Section means all coating system components, including primers, emulsions, enamels, varnishes, stains, lacquers, sealers, fillers, and other applied materials whether used as prime, intermediate or finish coat.

B. Quality and manufacture: Insofar as practicable each paint shall be factory-mixed to match approved samples and colors, and be of a consistency permitting immediate application. Use best quality grade regularly manufactured by one of the following:

1. Ameritone Paint Corp.

2. Dunn-Edwards Corp.

3. Frazee Paint Co.

4. Sherwin Williams Co.

5. Sinclair Paint Co.

6. Vista Paint Co.

C. Paint uniformity and compatibility:

1. Provide finish coats compatible with the prime coats used.

2. Review other Sections of these Specifications, in which prime coats are specified, and manufacturer's data for shop-primed surfaces to be painted.

3. Contractor shall be responsible for the compatibility of the total coating system.

4. Provide barrier coats over incompatible primer or remove and reprime.

5. Products of more than one approved manufacturer may be used, except that all products applied on a surface shall be by the same manufacturer.

2.02 MATERIALS

A. Coatings: Ready mixed, except field catalyzed coatings. Process pigments to a soft paste consistency, capable of being readily and uniformly dispersed to a homogeneous coating; good flow and brushing properties; capable of drying or curing free of streaks or sags.

B. Accessory Materials: Linseed oil, shellac, turpentine, paint thinners and other materials not specifically indicated but required to achieve the finishes specified, of commercial quality.

C. Patching Materials: Latex filler.

D. Fastener Head Cover Materials: Latex filler.

2.03 FINISHES

A. Refer to paint specifications and finishes in Architectural drawings.

PART 3: EXECUTION

3.01 EXAMINATION

A. Verify site conditions.

B. Verify that surfaces are ready to receive work as instructed by the product manufacturer.

C. Examine surfaces scheduled to be finished prior to commencement of work. Report any condition that may potentially affect proper application.

D. Test shop applied primer for compatibility with subsequent cover materials.

E. Measure moisture content of surfaces using an electronic moisture meter. Do not apply finishes unless moisture content of surfaces are below the following maximums:

1. Masonry, Concrete, and Concrete Unit Masonry: 12%.

2. Interior Wood: 15%, measured in accordance with ASTM D 2016.

3. Exterior Wood: 15%, measured in accordance with ASTM D 2016.

3.02 PREPARATION

A. Remove electrical plates, hardware, light fixture trim, escutcheons, and fittings prior to preparing surfaces or finishing.

B. Correct defects and clean surfaces which affect work of this section.

C. Seal with shellac and seal marks which may bleed through surface finishes.

D. Impervious Surfaces: Remove mildew by scrubbing with solution of tri-sodium phosphate and bleach. Rinse with clean water and allow surface to dry.

E. Aluminum Surfaces Scheduled for Paint Finish: Remove surface contamination by steam or high pressure water. Remove oxidation with acid etch and solvent washing. Apply etching primer immediately following cleaning.

F. Asphalt, Creosote, or Bituminous Surfaces Scheduled for Paint Finish: Remove foreign particles to permit adhesion of finishing materials. Apply compatible sealer or primer.

G. Insulated Coverings: Remove dirt, grease, and oil from canvas and cotton.

H. Concrete Floors: Remove contamination, acid etch, and rinse floors with clear water. Verify required acid-alkali balance is achieved. Allow to dry.

I. Copper Surfaces Scheduled for a Paint Finish: Remove contamination by steam, high pressure water, or solvent washing. Apply vinyl etch primer immediately following cleaning.

J. Copper Surfaces Scheduled for a Natural Oxidized Finish: Remove contamination by applying oxidizing solution of copper acetate and ammonium chloride in acetic acid. Rub on repeatedly for required effect. Once attained, rinse surfaces with clear water and allow to dry.

K. Gypsum Board Surfaces: Fill minor defects with filler compound. Spot prime defects after repair.

L. Galvanized Surfaces: Remove surface contamination and oils and wash with solvent. Apply coat of etching primer.

M. Concrete and Unit Masonry Surfaces Scheduled to Receive Paint Finish: Remove dirt, loose mortar, scale, salt or alkali powder, and other foreign matter. Remove oil and grease with a solution of tri-sodium phosphate; rinse well and allow to dry. Remove stains caused by weathering of corroding metals with a solution of sodium metasilicate after thoroughly wetting with water. Allow to dry.

N. Plaster Surfaces: Fill hairline cracks, small holes, and imperfections with latex patching plaster. Make smooth and flush with adjacent surfaces. Wash and neutralize high alkali surfaces.

O. Uncoated Steel and Iron Surfaces: Remove grease, mill scale, weld splatter, dirt, and rust. Where heavy coatings of scale are evident, remove by wire brushing or sandblasting; clean by washing with solvent. Apply a treatment of phosphoric acid solution, ensuring weld joints, bolts, and nuts are similarly cleaned. Spot prime paint after repairs.

P. Shop Primed Steel Surfaces: Sand and scrape to remove loose primer and rust. Feather edges to make touch-up patches inconspicuous. Clean surfaces with solvent. Prime bare steel surfaces.

Q. Interior Wood Items Scheduled to Receive Paint Finish: Wipe off dust and grit prior to priming. Seal knots, pitch streaks, and sappy sections with sealer. Fill nail holes and cracks after primer has dried; sand between coats.

R. Interior Wood Items Scheduled to Receive Transparent Finish: Wipe off dust and grit prior to sealing, seal knots, pitch streaks, and sappy sections with sealer. Fill nail holes and cracks after sealer has dried; sand lightly between coats.

S. Exterior Wood Scheduled to Receive Paint Finish: Remove dust, grit, and foreign matter. Seal knots, pitch streaks, and sappy sections. Fill nail holes with tinted exterior caulking compound after prime coat has been applied.

T. Exterior Wood Scheduled to Receive Transparent Finish: Remove dust, grit, and foreign matter; seal knots, pitch streaks, and sappy sections with sealer. Fill nail holes with tinted exterior caulking compound after sealer has been applied.

U. Glue-Laminated Beams: Prior to finishing, wash surfaces with solvent, remove grease and dirt.

V. Wood and Metal Doors Scheduled for Painting: Seal top and bottom edges with primer.

3.03 APPLICATION

A. Apply products in accordance with manufacturer's instructions.

B. Do not apply finishes to surfaces that are not dry.

C. Apply each coat to uniform finish.

D. Apply each coat of paint slightly darker than preceding coat unless otherwise approved.

E. Sand wood and metal lightly between coats to achieve required finish.

F. Vacuum clean surfaces free of loose particles. Use tack cloth just prior to applying next coat.

G. Allow applied coat to dry before next coat is applied.

H. Where clear finishes are required, tint fillers to match wood. Work fillers into the grain before set. Wipe excess from surface.

I. Prime concealed surfaces of interior and exterior woodwork with primer paint.

J. Prime concealed surfaces of interior woodwork scheduled to receive stain or varnish finish with gloss varnish reduced 25% with mineral spirits.

3.04 FINISHING MECHANICAL AND ELECTRICAL EQUIPMENT

A. Reinstall electrical cover plates, hardware, light fixture trim, escutcheons, and fittings removed prior to finishing.

3.05 CLEANING

A. Clean work.

B. Collect waste material which may constitute a fire hazard, place in closed metal containers and remove daily from site.

C. Contractor to provide owner with 10 gallons of graffiti removal solvent upon completion of work.

3.06 PAINT FINISH SCHEDULE

A. Refer to architectural drawings for paint manufacturer and finish information. An equal process is acceptable using other manufacturers listed in this section.

PART 4: PAYMENT

Payment for the aforementioned applicable specifications for Painting related to the storage building shall be considered as included within the Lump Sum (LS) price bid for Storage Building, 5-units (890 SF) and no further payment will be allowed therefor.

END OF SECTION

SECTION 26 05 00 BASIC ELECTRICAL REQUIREMENTS

PART 1 - GENERAL

1.01 SCOPE

A. This section supplements all sections of this division and shall apply to all phases of work hereinafter specified, shown on the drawings, or required to provide a complete installation of electrical systems for the Project. The work required under this division is not limited to the electrical specifications and drawings. Refer to all bid documents including Civil, Architectural, Structural, and Mechanical documents which may designate Work to be accomplished. The intent of the Specifications is to provide a complete and operable electrical system, which shall include all documents that are a part of the entire Project Contract.
   1. Work included: Furnish all labor, material, tools, equipment, facilities, transportation, skilled supervision necessary for, and incidental to, performing operations in connection with furnishing, delivery, and installation of the work in this division complete as shown or noted on the Drawings and specified herein.

B. Related Work Specified Elsewhere:
   1. Refer to all sections in the general contract conditions, Contract Requirements, Division 01, General Requirements, and Sections 260519, 260526, 260533, 260553, 260554, 262200, 262416, 265100, and 265600 of these Specifications.

C. Work Installed but Furnished by Others:
   1. The electrical work includes the installation or connection of certain materials and equipment furnished by others. Verify installation details. Foundations for apparatus and equipment will be furnished by others unless otherwise noted or detailed.

1.02 GENERAL REQUIREMENTS

A. Guarantee See General Conditions:
   1. Except as may be specified under other Sections in the specification, guarantee equipment furnished under the specifications for a period of one year, except for equipment required to have a longer guarantee period, from date of final completion. Guarantee all work against defective workmanship, material, and improper installation. Upon notification of failure, correct deficiency immediately and without additional cost to the City.
   2. Standard warranty of manufacturer shall apply for replacement of parts after expiration of the above period. Manufacturer shall furnish replacement parts to the City or his service agency as approved. Furnish to the City, through the Architect, printed manufacturer's warranties complete with material included and expiration dates, upon completion of project. Conform to Division 01.

B. Equipment Safety: All electrical materials and equipment shall be new and shall be listed by Underwriter's Laboratories and bear their label, or listed and certified by a nationally recognized testing authority where UL does not have an approval. Custom made equipment must have complete test data submitted by the manufacturer attesting to its safety.

C. Codes and Regulations:

1. Design, manufacturer, testing and method of installation of all apparatus and materials furnished under the requirements of these specifications shall conform to the latest publications or standard rules of the following:
   a. Institute of Electrical and Electronic Engineers - IEEE
   b. National Electrical Manufacturers' Association - NEMA
   c. Underwriters' Laboratories, Inc. - UL
   d. National Fire Protection Association - NFPA
   e. American Society for Testing and Materials - ASTM
   f. American National Standards Institute - ANSI
   g. California Electrical Code - CEC, Title 24, Part 3
   h. California Code of Regulations, Title 8, Subchapter 5
   i. California Building Code-CBC, Title 24 Parts 1 &2
   j. State & Municipal Codes in Force in the Specific Project Area
   k. Occupational Safety & Health Administration - OSHA
   l. California State Fire Marshal
   m. California Fire Code- CFC, Title 24 Part 9
   n. National Electrical Testing Association - NETA
2. The term "Code", when used within the specifications, shall refer to the Publications, Standards, ordinances and codes, listed above. In the case where the codes have different levels of requirements the most stringent rules shall apply.

D. Requirements of Regulatory Agencies:
1. Codes, Permits, and Fees: Where the Contract Documents exceed minimum requirements, the Contract Documents take precedence. Where code conflicts occur, the most stringent shall apply. The most stringent condition shall be as interpreted by the Engineer.
   a. Comply with all requirements for permits, licenses, fees and Code. Permits, licenses, fees, inspections and arrangements required for the Contractor at his expense shall obtain the Work, unless otherwise specified.
   b. Comply with the requirements of the applicable utility companies serving the Project. Make all arrangements with the utility companies for proper coordination of the Work.

E. Shop Drawings:
1. See Division 01 for additional requirements.
2. Time Schedules for Submission and Ordering: The Contractor shall prepare, review and coordinate his schedule of submissions carefully, determining the necessary lead time for preparing, submitting, checking, ordering and delivery of materials and equipment for timely arrival. The Contractor shall be responsible for conformance with the overall construction schedule.
3. Submittals will be checked for general compliance with specifications only. The Contractor shall be responsible for deviations from the drawings or specifications and for errors or omissions of any sort in submittals.
4. Submit a complete list of materials and equipment proposed for the job, including manufacturers names and catalog numbers.
5. Shop drawings shall be submitted in completed groups of materials (i.e., lighting fixtures or switchgear). The Contractor shall add and sign the following paragraph on equipment and materials submitted for review. "It is hereby certified that the (equipment) (material) shown and marked in this submittal is that proposed to be incorporated into the project; is in compliance with the Contract Drawings and specifications and can be installed in the allocated spaces". Failure to add the above written statement for compliance will result in

return of submittals without review.

a. Bind catalog cuts, plate numbers, descriptive bulletins and drawings, 11" x 17" (275 mm x 435 mm) or smaller, in sets with covers neatly showing titles.
b. The Contractor shall verify dimensions of equipment and be satisfied as to Code compliance for fit prior to submitting shop drawings for approval.
c. Where current limiting devices are specified, submit technical data to substantiate adequate protection of equipment cascaded downstream. Submittals shall not be reviewed unless supporting calculations and data are submitted therewith.
d. Include complete catalog information such as construction, ratings, insulation systems, as applicable.
e. For any material specified to meet UL or trade standards, furnish the manufacturers or vendor's certification that the material furnished for the work does in fact equal or exceed such specifications.
f. Reference listings to the specifications' Sections and Article to which each is applicable.
g. Equipment Floor Plans: After approval of material is secured prepare a floor plan of each electrical and communication equipment space, room or yard, drawn to scale at 1/2 inch equals 1 foot and submit for approval in the same manner as for shop drawings. The layout drawings shall be exact scale.

6. Contractor shall prepare coordinated drawings when required by Division 01 or where noted otherwise.

F. Interpretations: The Contractor through the Architect must make Requests for interpretations of drawings and specifications. Any such requests made by equipment manufacturers or suppliers will be referred to the Contractor.

G. Standard of Quality

1. The contract Drawings and Specifications establish the “MINIMUM STANDARD OF QUALITY” each product and/or system must meet to be considered acceptable. Products of other manufactures will be considered if the product and/or system meet or exceed the “MINIMUM STANDARD OF QUALITY” established by this Contract Document.

H. Substitutions: Refer to Division 01

I. Submit comprehensive material list, shop drawings and complete technical data for the following equipment and materials:

1. General Requirements:

a. Panelboards.
b. Conduits
c. Conductors, include all selected insulation types.
d. Fuses
e. Disconnect switches and Starters.
f. Pullboxes, manholes and handholes.
g. Standard lighting fixtures, specially fabricated fixtures, ballasts and lamps, with samples and sample of standard finish available (where requested).
h. Control devices, standard and special receptacles, switches, outlets and finish device plates.

i. Transformers
j. Exterior lighting system including luminaires, poles, footings, arms and associated attachments

J. Utility Service:
1. Existing Utility Service to be reused.

K. Record Drawings: Refer to Division 01, Contract Closeout.

L. Work Responsibilities:
1. The drawings indicate diagrammatically the desired locations or arrangement of conduit runs, outlets, junction boxes and equipment and are to be followed. Execute the work so as to secure the best possible installation in the available space and to overcome local difficulties due to space limitations. The Contractor is responsible for the correct placing of his work. Where conflicts occur in plans and/or specifications, the contractor shall refer. to contract document hierarchy in contract section of specifications.
2. Locations shown on architectural plan or on wall elevations shall take precedence over electrical plan locations, but where a major conflict is evident, notify the Architect.
3. In the event minor changes in the indicated locations or arrangement are necessary due to developed conditions in the building construction or rearrangement of furnishings or equipment or due to interference with other trades, such changes shall be made without extra cost.
4. Verify dimensions and the correct location of building POC with City before proceeding with the roughing-in of connections.
5. All scaled and figured dimensions are approximate of typical equipment of the class indicated. Before proceeding with work carefully check and verify dimensions and sizes with the drawings to see that the furnished equipment will fit into the spaces provided without violation of applicable Codes.
6. Should any changes to the work indicated on the drawings or described in the specifications be necessary in order to comply with the above requirements, notify the Architect.
7. Contractor shall be responsible for coordination of coordinated drawings when required by the Architect.
8. Replace or repair, without additional compensation any work which does not comply with or which is installed in violation of any of these requirements.

M. Installation General: For special requirements, refer to specific equipment under these requirements.
1. Unless otherwise specified elsewhere in the specifications, do all excavating necessary for the proper installation of the electrical work.
2. Contractor shall be responsible for cutting and patching which may be required for the proper installation of the electrical work.
3. Protect work, materials and equipment cause whatever and provide adequate and proper storage facilities during the progress of the work. Storage outdoors shall be weather protected and shall include space heaters to prevent condensation. Provide for the safety and good condition of all work until final acceptance of the work. Replace all damaged or defective work, materials and equipment before requesting final acceptance.
4. Conduit and Equipment to be Installed: Clean thoroughly to remove plaster, spattered paint, cement and dirt on both exterior and interior. All underground conduits shall be mandrelled prior to pulling wire.
5. Conduit and Equipment to be Painted: Clean conduit exposed to view in completed structure by removing plaster and dirt. Remove grease, oil and similar material from

conduit and equipment by wiping with clean rags and suitable solvents in preparation for paint.

6. Items with Factory Finish: Remove cement, plaster, grease and oil, and leave surfaces, including cracks and corners, clean and polished. Touch up scratched or bare spots to match finish.
7. Site Cleaning: Remove from site all packing cartons, scrap materials and other rubbish on a weekly basis. Vacuum out all cabinets, switchgear and panels and junction boxes prior to pulling any conductors.
8. Electrical equipment and materials exposed to public and in finished areas shall be finish-painted after installation in accordance with the Painting Section. All exposed screw-type fasteners, exterior, or interior in restrooms, shall be vandal-resistant spanner type; include tool.

N. Excavation, Cutting and Patching:
1. Excavating and backfilling connected with electrical work, repaving cuts and providing and maintaining protective measures for the electrical work excavation required by the governing authorities having jurisdiction shall be performed as a part of the work of this Division.
2. Verify openings indicated on the drawings. Provide all cutting, patching and reinforcement of the construction of the building as required to install electrical work.

O. Tests
1. Refer to Division 01 for testing requirements.
2. Prior to energizing any motor, measure the service voltage for phase balance and report if unbalance exceeds 1% from mean.
3. Measure the three-phase voltage at no load and at maximum load conditions and submit to the engineer a report showing the results of these measurements.
4. Upon completion of the work and adjustment of all equipment, conduct an operating test. Conduct the test in the presence of an authorized representative of the Architect. Demonstrate system and equipment to operate in accordance with requirements of the Contract Documents and to be free from electrical and mechanical defects. Provide systems free from short circuits and grounds and show an insulation resistance between phase conductors and ground not less than the requirements of the governing electric code. Test circuits for proper neutral connection.

P. Protection: Protect finish parts of the materials and equipment against damage during the progress of the work and until final completion and acceptance. Cover materials and equipment in storage and during construction in such a manner that no finished surfaces will be damaged or marred. Keep moving parts clean, dry and lubricated.

Q. Cleaning Up:
1. Upon completion of the work and at various time during the progress of the work, remove from the building all surplus materials, rubbish and debris resulting from the work of this Division.
2. Thoroughly clean switchgear including busses, apparatus, exposed conduit, metal work including the exterior and interior, and accessories for the work of this Division, of cement, plaster and other deleterious materials; remove grease and oil spots with cleaning solvent; carefully wipe surfaces and scrape cracks and corners clean.
3. Thoroughly polish chromium or plated work. Remove dirt and stains from lighting fixtures.
4. Leave the entire installation in a clean condition.

R. Completion:
   1. The work will not be reviewed for final acceptance until operating and maintenance data, manufacturer's literature, panel directories and nameplates specified herein have been approved and properly posted or installed and final cleaning of equipment and premises has been completed.
   2. When the installation is complete and adjustments have been made, operate the system for a period of one week, during which time demonstrate that systems are completed and operating in conformance with the specifications.

S. Operating and Maintenance Data: Submit complete and at one time, prior to acceptance of the installation, 4 copies of manufacturer's instructions for operation and maintenance of electrical equipment, including replacement parts lists. As specified in Division 01

T. Inspection and Acceptance Procedures: The Architect will submit observation reports periodically during the construction phase detailing Contract deficiencies. The Contractor is responsible for making corrections immediately. Notice of Completion of the project will not be made until all items have been corrected.

U. Final Completion of Electrical Systems:
   1. Prior to Final Completion of operating electrical systems, the Contractor shall:
      a. Provide materials of the type and quality specified and as necessary for proper operation, tested and ready for use.
      b. Deliver to the Architect, the Record Documents per 1.3 of this section.
      c. Furnish the required Operating and Maintenance Data/Manuals.
      d. Clean up of the project pertaining to this Division of the work.
      e. After installation has been completed and adjustments made, operate the system for a period of one week, during which time, demonstrate to the Architect that systems are complete and operating in conformance with Contract Documents.
      f. Conduct tests required and as specified in this Division and submit test reports and corrective actions taken.
      g. Submission of warranties and guarantees.
   2. Final Completion of Work Shall be Contingent On:
      a. Contractor replacing defective materials and workmanship.
      b. Upon completion of work and adjustments made, Contractor shall conduct an operating test for each system for approval at such time as Engineer or his representative directs. Conduct test in presence of authorized representative of City and demonstrate that systems and equipment do operate in accordance with requirements of the Contract Documents and are free from any defects.
      c. Contractor shall provide the necessary training programs and instructions to the City's representative. Number of hours shall be a minimum of four (4) hours for each system or days as required under separate Sections of these Specifications. Complete operation and maintenance manuals shall be provided at least two (2) weeks prior to training.
      d. Submit copies of manufacturer's instructions and maintenance of electrical equipment including replacement parts lists. Each set shall include one set of shop drawings of equipment installed.

V. Submittals for Change Orders: When changes are made during the construction phase, deletions and additions shall be presented in a manner that will indicate the cost of each item of material and corresponding labor. Markup shall be then added in accordance with the requirements of the Contract Documents.

W. The Contractor at a time convenient to the City shall provide instruction to the City's operating

personnel in the proper operation and maintenance of all equipment and systems. The instructors shall have received factory training and shall be thoroughly familiar with the equipment installed. The operating personnel shall receive the number of days instruction as indicated in other sections.

1.03 PROJECT RECORD DOCUMENTS

A. As Specified in Division 01.

B. Warranty Certificates: Comply with Division 01.

PART 2 – PRODUCTS

Not Used

PART 3 – EXECUTION

Not Used

PART 4 – PAYMENT

4.01 ELECTRICAL – PARKING LOT

Measurement and Payment for **"Electrical – Parking Lot"** shall be included in the **Lump Sum (LS)** Price basis. It shall be considered full compensation for complying with all permit conditions and the aforementioned "Basic Electrical Requirements" applicable for the work, as well as other applicable specification defined within Sections 260519, 260526, 260533, 260553, 260554, and 265600 of these Specifications as required to complete the Project scope of work and as shown on the drawings. The LS bid price shall include all labor, materials, equipment, and incidentals with respect to completing the electrical scope of work related to the parking lot portion of the Project including, but not limit to, furnishing, trenching, installing the conduit and pull boxes to the two building locations, trench backfill and compaction, installing the light standards, and all other electrical improvements as shown on the drawings. No additional compensation will be allowed.

Progress payments for **"Electrical – Parking Lot"** LS bid item shall be paid for in accordance with the completion percentage of the work as determined by the Engineer.

4.02 ELECTRICAL - BUILDINGS

Measurement and Payment for Base Bid Schedule **"Electrical – Storage Building, 5-units (890 SF)"** shall be included in the **Lump Sum (LS)** Price basis. It shall be considered full compensation for complying with all permit conditions and the aforementioned "Basic Electrical Requirements" applicable for the work, as well as other applicable specification defined within Sections 260519, 260526, 260533,260553, 260554, 262200, 262416, 265100,and 265600 of these Specifications as required to complete the scope of work and as shown on the drawings. The LS bid price shall include all labor, materials, equipment, and incidentals with respect to completing the electrical scope of work related to the building including, but not limit to, furnishing and installing the new transformer, any remaining conduit and pull boxes runs to the building location not included in the Parking Lot electrical work, furnishing and installing all wiring, lighting, and all other electrical improvements as shown on the drawings associated with the building. No additional compensation

will be allowed.

Progress payments for Base Bid Schedule **"Electrical – Storage Building, 5-units (890 SF) "** LS bid item shall be paid for in accordance with the completion percentage of the work as determined by the Engineer.

END OF SECTION

SECTION 26 05 19 LOW-VOLTAGE ELECTRICAL POWER CONDUCTORS AND CABLES

PART 1 - GENERAL

1.01 SECTION INCLUDES

A. Building wire and cable.

B. Wiring connectors and connections.

1.02 REFERENCES

A. ANSI/CEC - National Electrical Code.

B. C.E.C. - California Electrical Code.

C. InterNational Electrical Testing Association.

D. OSHA, Definition B, 29 CFR 1910.7.

1.03 QUALIFICATIONS

A. Manufacturer: Company specializing in manufacturing products specified in this Section with minimum three years documented experience.

1.04 REGULATORY REQUIREMENTS

A. Conform to requirements of C.E.C.

B. Furnish products listed and classified by Underwriters Laboratories, Inc. as suitable for purpose specified and shown.

1.05 PROJECT CONDITIONS

A. Verify that field measurements are as shown on Drawings.

B. Wire and cable routing shown on Drawings is approximate unless dimensioned. Route wire and cable as required to meet Project Conditions.

C. Where wire and cable routing is not shown, and destination only is indicated, determine exact routing and lengths required.

1.06 COORDINATION

A. Determine required separation between cable and other work.

B. Determine cable routing to avoid interference with other work.

PART 2 - PRODUCTS

2.01 BUILDING WIRE AND CABLE

A. Description: Single conductor insulated wire, new, manufactured not more than 6 months prior to installation, with size, type of insulation, voltage rating and manufacturer's name permanently marked on outer covering at regular intervals.

B. Conductor: Copper.

C. Insulation Voltage Rating: 600 volts.

2.02 MANUFACTURERS

A. Anaconda Power Cables.

B. Carol Cable

C. Rome Wire and Cable

D. Pirelli Wire and Cable

E. Okonite Wire

F. Canada Wire

PART 3 - EXECUTION

3.01 EXAMINATION

A. Verify that interior of building has been protected from weather.

B. Verify that mechanical work likely to damage wire and cable has been completed.

3.02 PREPARATION

A. Completely and thoroughly swab raceway before installing wire.

3.03 WIRING METHOD

A. Type THHN/THWN insulation for dry interior locations, in raceway.

B. Type THWN for exterior or wet locations, in raceway.

3.04 INSTALLATION

A. Provide conductors continuous from outlet to outlet and splice only at outlet or junction boxes.

B. Install products in accordance with manufacturers instructions.

C. Use solid conductor for feeders and branch circuits 10 AWG and smaller.

D. Use stranded conductors for control circuits.

E. Use conductor not smaller than 12 AWG for power and lighting circuits.

F. Use conductor not smaller than 16 AWG for control circuits.

G. Low voltage control wiring shall be No. 18 AWG minimum, insulated cable for each conductor. Voltage rating of cable shall be suitable for either Class I or Class II, remote control or signal circuit, as determined by the code and the actual installation.

H. Use 10 AWG conductors for 20 ampere, 120 volt branch circuits longer than 75 feet (450-m).

I. Use 10 AWG conductors for 20 ampere, 277 volt branch circuits longer than 200 feet (600-m).

J. Install all conductors in a single raceway at one time, insuring that conductors do not cross one another while being pulled into raceway. Leave sufficient cable at all fittings or boxes and prevent conductor kinks. Keep all conductors within the allowable tension and exceeding the minimum-bending radius.

K. Use suitable wire pulling lubricant for building wire 4 AWG and larger. Lubricants for wire

pulling shall conform to UL requirements for the insulation and raceway material.

L. Provide conductor supports as required by Code and recommended by the cable manufacturer. Where required, provide cable supports in vertical conduits similar to OZ Gedney Type CMT and provide the lower end of conduit with OZ Gedney Type KVF ventilators.

M. No splicing or joints will be permitted in either feeder or branch circuits except at outlet or accessible junction boxes.

N. Neatly train and lace wiring inside boxes, equipment, and panelboards.

O. Clean conductor surfaces before installing lugs and connectors.

P. Make splices, taps, and terminations to carry full ampacity of conductors with no perceptible temperature rise. Keep splices in underground junction boxes, handholes, and manholes to an absolute minimum. Where splices are necessary, use resin pressure splices and resin splicing kits manufactured by the 3M Company to totally encapsulate the splice. Arrange the splicing kit to minimize the effects of moisture.

Q. Use split bolt connectors for copper conductor splices and taps, 6 AWG and larger. Tape uninsulated conductors and connector with electrical tape to 150 percent of insulation rating of conductor.

R. Use solderless pressure connectors with insulating covers for copper conductor splices and taps, 8 AWG and smaller.

S. Use insulated spring wire connectors with plastic caps for copper conductor splices and taps, 10 AWG and smaller.

T. Provide all power and control conductors, that terminate on equipment or terminal strips, with solderless lugs or tork and flanged tongue terminals. Provide T & B "Sta-kon" tongue terminal. This type conductor termination is not required when the equipment is provided with solderless connectors.

3.05 INTERFACE WITH OTHER PRODUCTS

A. Identify each conductor with its circuit number or other designation indicated on Drawings.

B. Conductor Identification: All branch circuit conductors (No. 10 AWG and smaller) throughout the project shall be provided with color-coded insulation as follows:
   1. 208Y/120V
      a. Phase A - Black
      b. Phase B - Red
      c. Phase C - Blue
      d. Neutral - White
      e. Ground - Green
   2. 480Y/277V
      a. Phase A - Brown
      b. Phase B - Orange
      c. Phase C - Yellow
      d. Neutral - Grey

C. Conductors No. 8 and larger shall be black with bands of colored nonaging, plastic tape to color code the conductors, utilizing the same scheme as for branch circuits. The bands shall occur within each enclosure where a tap, splice or termination is made.

D. Color code all control wire insulation and label each termination

PART 4 – PAYMENT

Payment for the aforementioned specifications for "Low Voltage Electrical Power Conductors and Cables" shall be considered as included in the LS work associated with the Electrical – Parking Lot and Electrical – Storage Buildings bid items and no additional payment will be made therefore.

END OF SECTION

SECTION 26 05 26 GROUNDING AND BONDING FOR ELECTRICAL SYSTEMS

PART 1 - GENERAL

1.01 RELATED DOCUMENTS

A. Drawings and general provisions of the Contract, including General and Supplementary Conditions and Division 01 Specification Sections, apply to this Section.

1.02 SUMMARY

A. This Section includes methods and materials for grounding systems and equipment.

1.03 SUBMITTALS

A. Product Data: For each type of product indicated.

B. Qualification Data: For testing agency and testing agency's field supervisor.

C. Field quality-control test reports.

D. Operation and Maintenance Data: For grounding to include the following in emergency, operation, and maintenance manuals:
   1. Instructions for periodic testing and inspection of grounding features at grounding connections for separately derived systems based on NETA MTS and CECB.
      a. Tests shall be to determine if ground resistance or impedance values remain within specified maximums, and instructions shall recommend corrective action if they do not.
      b. Include recommended testing intervals.

1.04 QUALITY ASSURANCE

A. Electrical Components, Devices, and Accessories: Listed and labeled as defined in CEC, Article 100, by a testing agency acceptable to authorities having jurisdiction, and marked for intended use.

B. Comply with UL 467 for grounding and bonding materials and equipment.

C. Comply with the California Electrical Code.

PART 2 - PRODUCTS

2.01 CONDUCTORS

A. Insulated Conductors: Copper wire or cable insulated for 600 V unless otherwise required by applicable Code or authorities having jurisdiction.

B. Bare Copper Conductors:
   1. Solid Conductors: ASTM B 3.
   2. Stranded Conductors: ASTM B 8.
   3. Tinned Conductors: ASTM B 33.
   4. Bonding Cable: 28 kcmil, 14 strands of No. 17 AWG conductor, 1/4 inch (6 mm) in diameter.
   5. Bonding Conductor: No. 4 AWG, stranded conductor.
   6. Bonding Jumper: Copper tape, braided conductors, terminated with copper ferrules; 1-5/8 inches (41 mm) wide and 1/16 inch (1.6 mm) thick.
   7. Tinned Bonding Jumper: Tinned-copper tape, braided conductors, terminated with copper

ferrules; 1-5/8 inches (41 mm) wide and 1/16 inch (1.6 mm) thick.

2.02 GROUNDING ELECTRODES

A. Ground Rods: Copper-clad steel; 3/4 inch by10 feet (19 mm by 3 m) in diameter.

PART 3 - EXECUTION

3.01 APPLICATIONS

A. Conductors: Install solid conductor for No. 8 AWG and smaller, and stranded conductors for No. 6 AWG and larger, unless otherwise indicated.

B. Underground Grounding Conductors: Install bare copper conductor, No. 4/0 AWG minimum.
   1. Bury at least 24 inches (600 mm) below grade.
   2. Duct-Bank Grounding Conductor: Bury 12 inches (300 mm) above duct bank when indicated as part of duct-bank installation.

C. Isolated Grounding Conductors: Green-colored insulation with continuous yellow stripe. On feeders with isolated ground, identify grounding conductor where visible to normal inspection, with alternating bands of green and yellow tape, with at least three bands of green and two bands of yellow.

D. Grounding Bus: Install in electrical and telephone equipment rooms, in rooms housing service equipment, and elsewhere as indicated.
   1. Install bus on insulated spacers 1 inch (25 mm), minimum, from wall 6 inches (150 mm) above finished floor, unless otherwise indicated.
   2. Where indicated on both sides of doorways, route bus up to top of door frame, across top of doorway, down to specified height above floor, and connect to horizontal bus.

E. Conductor Terminations and Connections:
   1. Pipe and Equipment Grounding Conductor Terminations: Bolted connectors.
   2. Underground Connections: Welded connectors, except at test wells and as otherwise indicated.
   3. Connections to Ground Rods at Test Wells: Bolted connectors.
   4. Connections to Structural Steel: Welded connectors.

3.02 GROUNDING UNDERGROUND DISTRIBUTION SYSTEM COMPONENTS

A. Comply with IEEE C2 grounding requirements.

B. Grounding Manholes and Handholes: Install a driven ground rod through manhole or handhole floor, close to wall, and set rod depth so 4 inches (100 mm) will extend above finished floor. If necessary, install ground rod before manhole is placed and provide No. 1/0 AWG bare, tinned-copper conductor from ground rod into manhole through a waterproof sleeve in manhole wall. Protect ground rods passing through concrete floor with a double wrapping of pressure-sensitive insulating tape or heat-shrunk insulating sleeve from 2 inches (50 mm) above to 6 inches (150 mm) below concrete. Seal floor opening with waterproof, nonshrink grout.

C. Grounding Connections to Manhole Components: Bond exposed-metal parts such as inserts, cable racks, pulling irons, ladders, and cable shields within each manhole or handhole, to ground rod or grounding conductor. Make connections with No. 4 AWG minimum, stranded, hard-drawn copper bonding conductor. Train conductors level or plumb around corners and fasten to manhole walls. Connect to cable armor and cable shields as recommended by manufacturer of splicing and termination kits.

D. Pad-Mounted Transformers and Switches: Install two ground rods and ground ring around the pad. Ground pad-mounted equipment and noncurrent-carrying metal items associated with substations by connecting them to underground cable and grounding electrodes. Install tinned-copper conductor not less than No. 2 AWG for ground ring and for taps to equipment grounding terminals. Bury ground ring not less than 6 inches (150 mm) from the foundation.

3.03 EQUIPMENT GROUNDING

A. Install insulated equipment grounding conductors with all feeders and branch circuits sized per C.E.C. Table 250-122.

B. Install insulated equipment grounding conductors with the following items, in addition to those required by CEC:
   1. Feeders and branch circuits.
   2. Lighting circuits.
   3. Receptacle circuits.
   4. Single-phase motor and appliance branch circuits.
   5. Three-phase motor and appliance branch circuits.
   6. Flexible raceway runs.
   7. Armored and metal-clad cable runs.
   8. Busway Supply Circuits: Install insulated equipment grounding conductor from grounding bus in the switchgear, switchboard, or distribution panel to equipment grounding bar terminal on busway.

3.04 INSTALLATION

A. Grounding Conductors: Route along shortest and straightest paths possible, unless otherwise indicated or required by Code. Avoid obstructing access or placing conductors where they may be subjected to strain, impact, or damage.

B. Ground Rods: Drive rods until tops are 2 inches (50 mm) below finished floor or final grade, unless otherwise indicated.
   1. Interconnect ground rods with grounding electrode conductor below grade and as otherwise indicated. Make connections without exposing steel or damaging coating, if any.

C. Test Wells: Ground rod driven through drilled hole in bottom of handhole. Handholes are specified in Division 26 Section "Underground Ducts and Raceways for Electrical Systems," and shall be at least 12 inches (300 mm) deep, with cover.
   1. Test Wells: Install at least one test well for each service, unless otherwise indicated. Install at the ground rod electrically closest to service entrance. Set top of test well flush with finished grade or floor.

D. Bonding Straps and Jumpers: Install in locations accessible for inspection and maintenance, except where routed through short lengths of conduit.
   1. Bonding to Structure: Bond straps directly to basic structure, taking care not to penetrate any adjacent parts.
   2. Bonding to Equipment Mounted on Vibration Isolation Hangers and Supports: Install so vibration is not transmitted to rigidly mounted equipment.
   3. Use exothermic-welded connectors for outdoor locations, but if a disconnect-type connection is required, use a bolted clamp.

E. Grounding and Bonding for Piping:

1. Metal Water Service Pipe: Install insulated copper grounding conductors, in conduit, from building's main service equipment, or grounding bus, to main metal water service entrances to building. Connect grounding conductors to main metal water service pipes, using a bolted clamp connector or by bolting a lug-type connector to a pipe flange, using one of the lug bolts of the flange. Where a dielectric main water fitting is installed, connect grounding conductor on street side of fitting. Bond metal grounding conductor conduit or sleeve to conductor at each end.
2. Water Meter Piping: Use braided-type bonding jumpers to electrically bypass water meters. Connect to pipe with a bolted connector.
3. Bond each aboveground portion of gas piping system downstream from equipment shutoff valve.

F. Bonding Interior Metal Ducts: Bond metal air ducts to equipment grounding conductors of associated fans, blowers, electric heaters, and air cleaners. Install bonding jumper to bond across flexible duct connections to achieve continuity.

G. Grounding for Steel Building Structure: Install a driven ground rod at base of each corner column and at intermediate exterior columns at distances not more than 60 feet (18 m) apart.

H. Ground Ring: Install a grounding conductor, electrically connected to each building structure ground rod and to each steel column and where indicated on the drawings.
1. Install tinned-copper conductor not less than No. 4/0 AWG for ground ring and for taps to building steel.
2. Bury ground ring (where indicated) not less than 24 inches (600 mm) from building foundation.

I. UFER Ground (Concrete-Encased Grounding Electrode): Fabricate according to CEC, using a minimum of 40 feet (12 meters) of bare copper conductor not smaller than No. 4/0 AWG.
1. If concrete foundation is less than 20 feet (6 m) long, coil excess conductor within base of foundation.
2. Bond grounding conductor to reinforcing steel in at least four locations and to anchor bolts. Extend grounding conductor below grade and connect to building grounding grid or to grounding electrode external to concrete.

PART 4 – PAYMENT

Payment for the aforementioned specifications for "Grounding and Bonding for Electrical Systems" shall be considered as included in the LS work associated with the Electrical – Parking Lot and Electrical – Storage Building bid item and no additional payment will be made therefore.

END OF SECTION

SECTION 26 05 33 RACEWAY AND BOXES FOR ELECTRICAL SYSTEMS

PART 1 – GENERAL

1.01 RELATED DOCUMENTS

A. Drawings and general provisions of the Contract, including General and Supplementary Conditions and Division 01 Specification Sections, apply to this Section.

1.02 SUMMARY

A. This Section includes raceways, fittings, boxes, enclosures, and cabinets for electrical wiring.

1.03 DEFINITIONS

A. EMT: Electrical metallic tubing.

B. ENT: Electrical nonmetallic tubing.

C. EPDM: Ethylene-propylene-diene terpolymer rubber.

D. FMC: Flexible metal conduit.

E. IMC: Intermediate metal conduit.

F. LFMC: Liquidtight flexible metal conduit.

G. LFNC: Liquidtight flexible nonmetallic conduit.

H. NBR: Acrylonitrile-butadiene rubber.

I. RNC: Rigid nonmetallic conduit.

1.04 SUBMITTALS

1.1 A. Product Data: For surface raceways, wireways and fittings, floor boxes, hinged-cover enclosures, and cabinets.

1.05 REFERENCE STANDARDS

A. ANSI C80.1 - American National Standard for Electrical Rigid Steel Conduit (ERSC) 2015.

B. ANSI C80.3 - American National Standard for Electrical Metallic Tubing -- Steel (EMT-S) 2015.

C. NECA 1 - Standard for Good Workmanship in Electrical Construction 2015.

D. NECA 101 - Standard for Installing Steel Conduits (Rigid, IMC, EMT) 2013.

E. NECA 111 - Standard for Installing Nonmetallic Raceways (RNC, ENT, LFNC) 2003.

F. NEMA FB 1 - Fittings, Cast Metal Boxes, and Conduit Bodies for Conduit, Electrical Metallic Tubing, and Cable 2014.

G. NEMA RN 1 - Polyvinyl-Chloride (PVC) Externally Coated Galvanized Rigid Steel Conduit and Intermediate Metal Conduit 2018.

H. NEMA TC 2 - Electrical Polyvinyl Chloride (PVC) Conduit 2013.

I. NEMA TC 3 - Polyvinyl Chloride (PVC) Fittings for Use with Rigid PVC Conduit and Tubing 2016.

J. NFPA 70 - National Electrical Code Most Recent Edition Adopted by Authority Having Jurisdiction, Including All Applicable Amendments and Supplements.

K. UL 1 - Flexible Metal Conduit Current Edition, Including All Revisions.

L. UL 6 - Electrical Rigid Metal Conduit-Steel Current Edition, Including All Revisions.

M. UL 360 - Liquid-Tight Flexible Steel Conduit Current Edition, Including All Revisions.

N. UL 514B - Conduit, Tubing, and Cable Fittings Current Edition, Including All Revisions.

O. UL 651 - Schedule 40, 80, Type EB and A Rigid PVC Conduit and Fittings Current Edition, Including All Revisions.

P. UL 797 - Electrical Metallic Tubing-Steel Current Edition, Including All Revisions.

1.6 ADMINISTRATIVE REQUIREMENTS

A. Coordination:
   1. Coordinate minimum sizes of conduits with the actual conductors to be installed, including adjustments for conductor sizes increased for voltage drop.
   2. Coordinate the arrangement of conduits with structural members, ductwork, piping, equipment and other potential conflicts installed under other sections or by others.
   3. Verify exact conduit termination locations required for boxes, enclosures, and equipment installed under other sections or by others.
   4. Coordinate the work with other trades to provide roof penetrations that preserve the integrity of the roofing system and do not void the roof warranty.
   5. Notify Architect of any conflicts with or deviations from Contract Documents. Obtain direction before proceeding with work.

B. Sequencing:

1. Do not begin installation of conductors and cables until installation of conduit is complete between outlet, junction and splicing points.

1.7 SUBMITTALS

A. Product Data: Provide manufacturer's standard catalog pages and data sheets for conduits and fittings.

B. Project Record Documents: Record actual routing for conduits installed underground and conduits 2 inch (53 mm) trade size and larger.

1.8 QUALITY ASSURANCE

A. Conform to requirements of NFPA 70.

B. Product Listing Organization Qualifications: An organization recognized by OSHA as a Nationally Recognized Testing Laboratory (NRTL) and acceptable to authorities having jurisdiction.

PART 2 – PRODUCTS

2.1 CONDUIT APPLICATIONS

A. Do not use conduit and associated fittings for applications other than as permitted by NFPA 70 and product listing.

B. Unless otherwise indicated and where not otherwise restricted, use the conduit types indicated for the specified applications. Where more than one listed application applies, comply with the most restrictive requirements. Where conduit type for a particular application is not specified, use galvanized steel rigid metal conduit.

C. Underground:
1. Under Slab on Grade: Use rigid PVC conduit.
2. Exterior, Direct-Buried: Use rigid PVC conduit.
3. Where rigid polyvinyl (PVC) conduit is provided, transition to galvanized steel rigid metal conduit where emerging from underground.
4. Where rigid polyvinyl (PVC) conduitlarger than 2 inch (53 mm) trade size is provided, use PVC-coated galvanized steel rigid metal conduit elbows for bends.
5. Where steel conduit is installed in direct contact with earth where soil has a resistivity of less than 2000 ohm-centimeters or is characterized as severely corrosive based on soils report or local experience, use corrosion protection tape to provide supplementary corrosion protection or use PVC-coated galvanized steel rigid metal conduit.
6. Where steel conduit emerges from concrete into soil, use corrosion protection tape to provide supplementary corrosion protection for a minimum of 4 inches on either side of where conduit emerges or use PVC-coated galvanized steel rigid metal conduit.

D. Concealed Within Masonry Walls: Use galvanized steel rigid metal conduit or electrical metallic tubing (EMT).

E. Concealed Within Hollow Stud Walls: Use electrical metallic tubing (EMT).

F. Concealed Above Accessible Ceilings: Use electrical metallic tubing (EMT).

G. Interior, Damp or Wet Locations: Use galvanized steel rigid metal conduit.

H. Exposed, Interior, Not Subject to Physical Damage: Use galvanized steel rigid metal conduit or electrical metallic tubing (EMT).

I. Exposed, Interior, Subject to Physical Damage: Use galvanized steel rigid metal conduit.

1. Locations subject to physical damage include, but are not limited to:
   a. Where exposed below 8 feet, except within electrical and communication rooms or closets.

J. Exposed, Exterior: Use galvanized steel rigid metal conduit.

K. Concealed, Exterior, Not Embedded in Concrete or in Contact With Earth: Use galvanized steel rigid metal conduit.

L. Connections to Luminaires Above Accessible Ceilings: Use flexible metal conduit.
1. Maximum Length: 6 feet.

M. Connections to Vibrating Equipment:
1. Dry Locations: Use flexible metal conduit.
2. Damp, Wet, or Corrosive Locations: Use liquidtight flexible metal conduit.
3. Maximum Length: 6 feet unless otherwise indicated.
4. Vibrating equipment includes, but is not limited to:
   a. Transformers.
   b. Motors.

N. Fished in Existing Walls, Where Necessary: Use flexible metal conduit.

2.2 CONDUIT REQUIREMENTS

A. Provide all conduit, fittings, supports, and accessories required for a complete raceway system.

B. Provide products listed, classified, and labeled as suitable for the purpose intended.

C. Minimum Conduit Size, Unless Otherwise Indicated:
1. Branch Circuits: 3/4 inch (21 mm) trade size.
2. Branch Circuit Homeruns: 3/4 inch (21 mm) trade size.

3. Control Circuits: 1/2 inch (16 mm) trade size.
4. Flexible Connections to Luminaires: 3/8 inch (12 mm) trade size.
5. Underground, Exterior: 1 inch (27 mm) trade size.

D. Where conduit size is not indicated, size to comply with NFPA 70 but not less than applicable minimum size requirements specified.

2.3 GALVANIZED STEEL RIGID METAL CONDUIT (RMC)

A. Description: NFPA 70, Type RMC galvanized steel rigid metal conduit complying with ANSI C80.1 and listed and labeled as complying with UL 6.

B. Fittings:
1. Non-Hazardous Locations: Use fittings complying with NEMA FB 1 and listed and labeled as complying with UL 514B.
2. Material: Use steel or malleable iron.
3. Connectors and Couplings: Use threaded type fittings only. Threadless set screw and compression (gland) type fittings are not permitted.

2.4 PVC-COATED GALVANIZED STEEL RIGID METAL CONDUIT (RMC)

A. Description: NFPA 70, Type RMC galvanized steel rigid metal conduit with external polyvinyl chloride (PVC) coating complying with NEMA RN 1 and listed and labeled as complying with UL 6.

B. Exterior Coating: Polyvinyl chloride (PVC), nominal thickness of 40 mil.

C. PVC-Coated Fittings:
1. Manufacturer: Same as manufacturer of PVC-coated conduit to be installed.
2. Non-Hazardous Locations: Use fittings listed and labeled as complying with UL 514B.
3. Material: Use steel or malleable iron.
4. Exterior Coating: Polyvinyl chloride (PVC), minimum thickness of 40 mil.

D. PVC-Coated Supports: Furnish with exterior coating of polyvinyl chloride (PVC), minimum thickness of 15 mil.

2.5 FLEXIBLE METAL CONDUIT (FMC)

A. Description: NFPA 70, Type FMC standard wall steel flexible metal conduit listed and labeled as complying with UL 1, and listed for use in classified firestop systems to be used.

B. Fittings:
1. Description: Fittings complying with NEMA FB 1 and listed and labeled as complying

with UL 514B.
2. Material: Use steel or malleable iron.

2.6 LIQUIDTIGHT FLEXIBLE METAL CONDUIT (LFMC)

A. Description: NFPA 70, Type LFMC polyvinyl chloride (PVC) jacketed steel flexible metal conduit listed and labeled as complying with UL 360.

B. Fittings:
1. Description: Fittings complying with NEMA FB 1 and listed and labeled as complying with UL 514B.
2. Material: Use steel or malleable iron.

2.7 ELECTRICAL METALLIC TUBING (EMT)

A. Description: NFPA 70, Type EMT steel electrical metallic tubing complying with ANSI C80.3 and listed and labeled as complying with UL 797.

B. Fittings:
1. Description: Fittings complying with NEMA FB 1 and listed and labeled as complying with UL 514B.
2. Material: Use steel or malleable iron.
3. Connectors and Couplings: Use compression (gland) or set-screw type.
   a. Do not use indenter type connectors and couplings.

2.8 RIGID POLYVINYL CHLORIDE (PVC) CONDUIT

A. Description: NFPA 70, Type PVC rigid polyvinyl chloride conduit complying with NEMA TC 2 and listed and labeled as complying with UL 651; Schedule 40 unless otherwise indicated, Schedule 80 where subject to physical damage; rated for use with conductors rated 90 degrees C.

B. Fittings:
1. Manufacturer: Same as manufacturer of conduit to be connected.
2. Description: Fittings complying with NEMA TC 3 and listed and labeled as complying with UL 651; material to match conduit.

2.9 ACCESSORIES

A. Corrosion Protection Tape: PVC-based, minimum thickness of 20 mil.

B. Conduit Joint Compound: Corrosion-resistant, electrically conductive; suitable for use with the conduit to be installed.

C. Solvent Cement for PVC Conduit and Fittings: As recommended by manufacturer of conduit and fittings to be installed.

D. Pull Strings: Use nylon cord with average breaking strength of not less than 200 pound-force.

PART 3 – EXECUTION

3.1 INSTALLATION

A. Install products in accordance with manufacturer's instructions.

B. Perform work in accordance with NECA 1 (general workmanship).

C. Install galvanized steel rigid metal conduit (RMC) in accordance with NECA 101.

D. Install PVC-coated galvanized steel rigid metal conduit (RMC) using only tools approved by the manufacturer.

E. Install rigid polyvinyl chloride (PVC) conduit in accordance with NECA 111.

F. Conduit Routing:
   1. Unless dimensioned, conduit routing indicated is diagrammatic.
   2. When conduit destination is indicated without specific routing, determine exact routing required.
   3. Conceal all conduits unless specifically indicated to be exposed.
   4. Conduits installed underground or embedded in concrete may be routed in the shortest possible manner unless otherwise indicated. Route all other conduits parallel or perpendicular to building structure and surfaces, following surface contours where practical.
   5. Arrange conduit to maintain adequate headroom, clearances, and access.
   6. Arrange conduit to provide no more than the equivalent of four 90 degree bends between pull points.
   7. Arrange conduit to provide no more than 150 feet between pull points.
   8. Route conduits above water and drain piping where possible.
   9. Arrange conduit to prevent moisture traps. Provide drain fittings at low points and at sealing fittings where moisture may collect.
   10. Maintain minimum clearance of 6 inches between conduits and piping for other systems.
   11. Maintain minimum clearance of 12 inches between conduits and hot surfaces. This includes, but is not limited to:
      a. Heaters.
      b. Hot water piping.
      c. Flues.
   12. Group parallel conduits in the same area together on a common rack.

G. Conduit Support:
   1. Secure and support conduits in accordance with NFPA 70 and Section 26 05 29 using suitable supports and methods approved by the authority having jurisdiction.
   2. Provide independent support from building structure. Do not provide support from piping, ductwork, or other systems.
   3. Installation Above Suspended Ceilings: Do not provide support from ceiling support system. Do not provide support from ceiling grid or allow conduits to lay on ceiling tiles.
   4. Use conduit strap to support single surface-mounted conduit.
      a. Use clamp back spacer with conduit strap for damp and wet locations to provide space between conduit and mounting surface.
   5. Use metal channel (strut) with accessory conduit clamps to support multiple parallel surface-mounted conduits.
   6. Use conduit clamp to support single conduit from beam clamp or threaded rod.
   7. Use trapeze hangers assembled from threaded rods and metal channel (strut) with accessory conduit clamps to support multiple parallel suspended conduits.
   8. Use non-penetrating rooftop supports to support conduits routed across rooftops (only where approved).
   9. Use of spring steel conduit clips for support of conduits is not permitted.
   10. Use of wire for support of conduits is not permitted.

H. Connections and Terminations:
   1. Use approved zinc-rich paint or conduit joint compound on field-cut threads of galvanized steel conduits prior to making connections.
   2. Where two threaded conduits must be joined and neither can be rotated, use three-piece couplings or split couplings. Do not use running threads.
   3. Use suitable adapters where required to transition from one type of conduit to another.
   4. Provide drip loops for liquidtight flexible conduit connections to prevent drainage of liquid into connectors.
   5. Terminate threaded conduits in boxes and enclosures using threaded hubs or double lock nuts for dry locations and raintight hubs for wet locations.
   6. Provide insulating bushings or insulated throats at all conduit terminations to protect conductors.
   7. Secure joints and connections to provide maximum mechanical strength and electrical continuity.

I. Penetrations:
   1. Do not penetrate or otherwise notch or cut structural members, including footings and grade beams, without approval of Structural Engineer.
   2. Make penetrations perpendicular to surfaces unless otherwise indicated.
   3. Provide sleeves for penetrations as indicated or as required to facilitate installation. Set sleeves flush with exposed surfaces unless otherwise indicated or required.
   4. Conceal bends for conduit risers emerging above ground.
   5. Seal interior of conduits entering the building from underground at first accessible point to prevent entry of moisture and gases.
   6. Where conduits penetrate waterproof membrane, seal as required to maintain integrity of membrane.

7. Make penetrations for roof-mounted equipment within associated equipment openings and curbs where possible to minimize roofing system penetrations. Where penetrations are necessary, seal as indicated or as required to preserve integrity of roofing system and maintain roof warranty. Include proposed locations of penetrations and methods for sealing with submittals.
8. Install firestopping to preserve fire resistance rating of partitions and other elements, using materials and methods specified in Section 07 84 00.

J. Underground Installation:
   1. Minimum Cover, Unless Otherwise Indicated or Required:
      a. Underground, Exterior: 24 inches.
      b. Under Slab on Grade: 12 inches to bottom of slab.
   2. Provide underground warning tape in accordance with Section 26 05 53 along entire conduit length.

K. Concrete Encasement: Where conduits not otherwise embedded within concrete are indicated to be concrete-encased, provide concrete in accordance with Section Concrete with minimum concrete cover of 3 inches on all sides unless otherwise indicated.

L. Conduit Movement Provisions: Where conduits are subject to movement, provide expansion and expansion/deflection fittings to prevent damage to enclosed conductors or connected equipment. This includes, but is not limited to:
   1. Where conduits cross structural joints intended for expansion, contraction, or deflection.
   2. Where calculated in accordance with NFPA 70 for rigid polyvinyl chloride (PVC) conduit installed above ground to compensate for thermal expansion and contraction.
   3. Where conduits are subject to earth movement by settlement or frost.

M. Condensation Prevention: Where conduits cross barriers between areas of potential substantial temperature differential, provide sealing fitting or approved sealing compound at an accessible point near the penetration to prevent condensation. This includes, but is not limited to:
   1. Where conduits pass from outdoors into conditioned interior spaces.
   2. Where conduits pass from unconditioned interior spaces into conditioned interior spaces.

N. Provide pull string in all empty conduits and in conduits where conductors and cables are to be installed by others. Leave minimum slack of 12 inches at each end.

O. Provide grounding and bonding in accordance with Section 26 05 26.

P. Identify conduits in accordance with Section 26 05 53.

3.2 FIELD QUALITY CONTROL

A. Repair cuts and abrasions in galvanized finishes using zinc-rich paint recommended by manufacturer. Replace components that exhibit signs of corrosion.

B. Where coating of PVC-coated galvanized steel rigid metal conduit (RMC) contains cuts or abrasions, repair in accordance with manufacturer's instructions.

C. Correct deficiencies and replace damaged or defective conduits.

3.3 CLEANING

A. Clean interior of conduits to remove moisture and foreign matter.

3.4 PROTECTION

A. Immediately after installation of conduit, use suitable manufactured plugs to provide protection from entry of moisture and foreign material and do not remove until ready for installation of conductors.

PART 4 – PAYMENT

Payment for the aforementioned specifications for "Raceway and Boxes for Electrical Systems" shall be considered as included in the LS work associated with the Electrical – Parking Lot and Electrical – Storage Buildings bid items and no additional payment will be made therefore.

END OF SECTION

SECTION 26 05 53 IDENTIFICATION FOR ELECTRICAL SYSTEMS

PART 1 – GENERAL

1.01 WORK INCLUDED

A. Nameplates.

B. Wire and cable markers.

1.02 SUBMITTALS

A. Submit shop drawings under provisions of Division 01.

B. Include schedule for nameplates and tape labels.

PART 2 - PRODUCTS

2.01 MATERIALS

A. Nameplates: Engraved three-layer laminated plastic, white letters on a white black background.
   1. Wire and Cable Markers: Cloth markers, split sleeve or tubing type.

PART 3 – EXECUTION

3.01 INSTALLATION

A. Degrease and clean surfaces to receive nameplates.

B. Install nameplates and tape labels parallel to equipment lines.
   1. Secure nameplates to equipment fronts using screws, or rivets. Secure nameplate to inside face of recessed panelboard doors in finished locations.
   2. Embossed tape will not be permitted for any application.

3.02 WIRE IDENTIFICATION

A. Provide wire markers on each conductor in panelboard gutters, pull boxes, outlet and junction boxes, and at load connection. Identify with panel and branch circuit or feeder number for power and lighting circuits, and with control wire number as indicated on schematic and interconnection diagrams equipment manufacturer's shop drawings for control wiring.

B. NAMEPLATE ENGRAVING

C. Provide nameplates to identify all circuits in the service distribution and power distribution panelboards; branch circuit panelboards; separately mounted starting switches; disconnecting switches; motor control push-button stations; selector switches; terminal cabinets; telephone cabinets, etc. Clearly identify on the nameplate the equipment such as "Air Handling Unit AH-1" and "Hot Water Cir. Pump P-1" in lieu of abbreviated plan references such as "AH-1" or "P-1".
   1. Provide nameplates of minimum letter height as scheduled below.
      a. Panelboards and Switchboards: 1/4 inch; identify equipment designation, voltage

rating, and source.

D. Individual Circuit Breakers In Panelboards and Switchboards: 1/8 inch; identify circuit and load served, including location.

E. Individual Circuit Breakers, Enclosed Switches and Motor Starters: 1/8 inch; identify voltage rating, ampere rating and load served including location.

F. HVAC and Plumbing Control Equipment: 1/8 inch; identify equipment designation and equipment served including location.

G. Communication Terminal Cabinets: 1/4 inch; identify cabinet designation and type of system.

H. Transformers: 1/4" inch; Identify equipment designation. 1/8" inch identify primary and secondary voltage, primary source and secondary load and location.

PART 4 – PAYMENT

Payment for the aforementioned specifications for "Identification for Electrical Systems" shall be considered as included in the LS work associated with the Electrical – Parking Lot and Electrical – Storage Building bid items and no additional payment will be made therefore.

END OF SECTION

SECTION 26 05 54 NAMEPLATES AND WARNING SIGNS

PART 1 - GENERAL

1.01 DESCRIPTION OF WORK

A. Provide nameplates and warning signs as shown on the Drawings and as specified.

1.02 SUBMITTALS

A. Submit a nameplate schedule to the Owner's Authorized Representative for review before the nameplates are installed.

PART 2 - PRODUCTS

2.01 MATERIALS

A. Fabricated nameplates shall clearly state the following:
   1. Manufacturer's name and equipment design ratings including current, voltage, (V), kilovoltamperes (KVA), horsepower (HP), revolutions per minute (RPM), bus bracing rating, and data, or as applicable.
   2. System usage and purpose, system nominal voltage, equipment rating KVA, amperes, HP and RPM as applicable. Designation data per Drawings or supplied with shop drawings.
   3. Panel and pullbox designation, date, voltage phase, wire, source of supply, and room number of the service.

B. Manufacturer's Device Nameplates: Device usage, manufactured date, purpose, or circuit number; manufacturer and electrical characteristic ratings including the following:
   1. Circuit Breakers: Voltage, continuous current, maximum interrupting current and trip current.
   2. Switches: Voltage, continuous current, horsepower or maximum current switching. If fused, include nameplate stating "Fuses must be replaced with current limiting type of identical characteristics".
   3. Contactors: Voltage, continuous current, horsepower or interrupting current, and whether "mechanically held" or "electrically held".
   4. High Voltage Sectionalizing Boxes: Voltage, continuous current and maximum current switching, located to be visible after installation.
   5. Motors: Rated voltage, full load amperes, frequency, phases, speed, horsepower, code letter rating, time rating, type of winding, class and temperature.
   6. Controllers: Voltage, current horsepower and trip setting of motor running overcurrent protection.

C. Equipment nameplate shall be engraved, laminated Micarta type with white letters engraved through the black background, except on emergency systems background shall be red and include the word "EMERGENCY". Letters shall be 3/8" high for devices, and minimum 1/2" high for equipment and enclosures. Adhesives are not acceptable.

D. All plates for receptacles and switches on emergency circuit shall be labeled "EMERGENCY" with 3/8" letters.

E. Each outlet not 120V - 20A shall be labeled indicating volts, amperes, circuit number with panel name and equipment fed.
   1. Example: 208V - 20A
      a. P1A-2,4
      b. COPIER
      c. for I.G. receptacle next to data outlet equipment name will be "Computer Only". No equipment name for convenience outlet.

F. All conduit and outlet boxes for signal system shall be color coded with 6" wide spray paint in every 6' as follows:
   1. Fire Alarm Red
   2. Tel/Data Light Green
   3. Paging Address Gray
   4. HVAC Control Light Blue

G. Marker pen is not acceptable to use for nameplate unless otherwise noted.

H. Provide a full size glass framed photocopy of single line diagram on wall adjacent to main switchgear.

I. All labeling of receptacles shall be written in a consistent font, letter height, and color throughout the project.

PART 3 - EXECUTION

3.01 INSTALLATION

A. Nameplates shall be mounted by steel screws.

B. Signs shall be permanently mounted with cadmium plated, steel screws.

C. The following items shall be provided with nameplate identification: cabinets, pull boxes, panel boards, disconnect switches, transformers, feeders and any other items as specified.

PART 4 – PAYMENT

Payment for the aforementioned specifications for "Nameplate and Warning Signs" shall be considered as included in the LS work associated with the Electrical – Parking Lot and Electrical – Storage Building bid items and no additional payment will be made therefore.

END OF SECTION

SECTION 26 22 00 LOW-VOLTAGE TRANSFORMERS

PART 1 - GENERAL

1.1 RELATED DOCUMENTS

A. Drawings and general provisions of the Contract, including General and Supplementary Conditions and Division 01 Specification Sections, apply to this Section.

1.2 SUMMARY

A. This Section includes the following types of dry-type transformers rated 600 V and less, with capacities up to 1000 kVA:

1. Distribution transformers.

2. K-13 Rated

1.3 ACTION SUBMITTALS

A. Product Data: Include rated nameplate data, capacities, weights, dimensions, minimum clearances, installed devices and features, and performance for each type and size of transformer indicated.

1.4 QUALITY ASSURANCE

A. Testing Agency Qualifications: An independent agency, with the experience and capability to conduct the testing indicated, that is a nationally recognized testing laboratory (NRTL) as defined by OSHA in 29 CFR 1910.7.

B. Source Limitations: Obtain each transformer type through one source from a single manufacturer.

C. Electrical Components, Devices, and Accessories: Listed and labeled as defined in NFPA 70, Article 100, by a testing agency acceptable to authorities having jurisdiction, and marked for intended use.

D. Comply with IEEE C57.12.91, "Test Code for Dry-Type Distribution and Power Transformers."

1.5 DELIVERY, STORAGE, AND HANDLING

A. Temporary Heating: Apply temporary heat according to manufacturer's written instructions within the enclosure of each ventilated-type unit, throughout periods during which equipment is not energized and when transformer is not in a space that is continuously under normal control of temperature and humidity.

PART 2 - PRODUCTS

2.1 MANUFACTURERS

A. Available Manufacturers: Subject to compliance with requirements, manufacturers offering products that may be incorporated into the Work include, but are not limited to, the following:

B. Manufacturers: Subject to compliance with requirements, provide products by one of the following:
1. Eaton Electrical Sector; Eaton Corporation; Cutler-Hammer Products.
2. General Electric Company.
3. Siemens Energy & Automation, Inc.
4. Square D Co./Groupe Schneider NA; Schneider Electric.

2.2 GENERAL TRANSFORMER REQUIREMENTS

A. Description: Factory-assembled and -tested, air-cooled units for 60-Hz service.

B. Cores: Grain-oriented, non-aging silicon steel.

C. Coils: Continuous windings without splices except for taps.

1. Internal Coil Connections: Brazed or pressure type.
2. Coil Material: Copper.

2.3 DISTRIBUTION TRANSFORMERS

A. Comply with NEMA ST 20, and list and label as complying with UL 1561.

B. Cores: One leg per phase.

C. Enclosure: Ventilated, NEMA 250, Type 2.

1. Core and coil shall be encapsulated within resin compound, sealing out moisture and air.

D. Transformer Enclosure Finish: Comply with NEMA 250.

E. Taps for Transformers 25 kVA and Larger: Two 2.5 percent taps above and two 2.5 percent taps below normal full capacity.

F. Insulation Class: 220 deg C, UL-component-recognized insulation system with a maximum of 115 deg C rise above 40 deg C ambient temperature.

G. Energy Efficiency for Transformers Rated 15 kVA and Larger:

1. Complying with NEMA TP 1, Class 1 efficiency levels.
2. Tested according to NEMA TP 2.

H. K-Factor Rating: Transformers indicated to be K-factor rated shall comply with UL 1561 requirements for nonsinusoidal load current-handling capability to the degree defined by designated K-factor.

1. Unit shall not overheat when carrying full-load current with harmonic distortion corresponding to designated K-factor.
2. Indicate value of K-factor on transformer nameplate.

I. Low-Sound-Level Requirements: Minimum of 3 dBA less than NEMA ST 20 standard sound levels when factory tested according to IEEE C57.12.91.

2.4 IDENTIFICATION DEVICES

A. Nameplates: Engraved, laminated-plastic or metal nameplate for each distribution transformer, mounted with corrosion-resistant screws. Nameplates and label products are specified in Section 260553 "Identification for Electrical Systems."

2.5 SOURCE QUALITY CONTROL

A. Test and inspect transformers according to IEEE C57.12.91.

B. Factory Sound-Level Tests: Conduct sound-level tests on equipment for this Project.

PART 3 - EXECUTION

3.1 EXAMINATION

A. Examine conditions for compliance with enclosure- and ambient-temperature requirements for each transformer.

B. Verify that field measurements are as needed to maintain working clearances required by NFPA 70 and manufacturer's written instructions.

C. Examine walls, floors, roofs, and concrete bases for suitable mounting conditions where transformers will be installed.

D. Verify that ground connections are in place and requirements in Section 260526 "Grounding and Bonding for Electrical Systems" have been met. Maximum ground resistance shall be 5 ohms at location of transformer.

E. Proceed with installation only after unsatisfactory conditions have been corrected.

3.2 INSTALLATION

A. Construct concrete bases and anchor floor-mounting transformers according to manufacturer's written instructions, seismic codes applicable to Project, and requirements in Section 260529 "Hangers and Supports for Electrical Systems."

3.3 CONNECTIONS

A. Ground equipment according to Section 260526 "Grounding and Bonding for Electrical Systems."

B. Connect wiring according to Section 260519 "Low-Voltage Electrical Power Conductors and Cables."

3.4 FIELD QUALITY CONTROL

A. Perform tests and inspections and prepare test reports.

B. Tests and Inspections:

1. Perform each visual and mechanical inspection and electrical test stated in NETA Acceptance Testing Specification. Certify compliance with test parameters.

C. Remove and replace units that do not pass tests or inspections and retest as specified above.

PART 4 - PAYMENT

Payment for the aforementioned specifications for "Low Voltage Transformers" shall be considered as included in the LS work associated with the Electrical – Storage Building bid item and no additional payment will be made therefore.

END OF SECTION

SECTION 26 24 16 PANELBOARDS

PART 1 - GENERAL

1.01 RELATED DOCUMENTS

A. Drawings and general provisions of the Contract, including General and Supplementary Conditions and Division 01 Specification Sections, apply to this Section.

1.02 SUMMARY

A. This Section includes the following:
   1. Distribution panelboards.
   2. Lighting and appliance branch-circuit panelboards.

1.03 DEFINITIONS

A. EMI: Electromagnetic interference.

B. GFCI: Ground-fault circuit interrupter.

C. RFI: Radio-frequency interference.

D. RMS: Root mean square.

E. SPDT: Single pole, double throw.

1.04 SUBMITTALS

A. Product Data: For each type of panelboard, overcurrent protective device, transient voltage suppression device, accessory, and component indicated. Include dimensions and manufacturers' technical data on features, performance, electrical characteristics, ratings, and finishes.

B. Field quality-control test reports including the following:
   1. Test procedures used.
   2. Test results that comply with requirements.
   3. Results of failed tests and corrective action taken to achieve test results that comply with requirements.

C. Panelboard Schedules: For installation in panelboards. Submit final versions after load balancing.

D. Operation and Maintenance Data: For panelboards and components to include in emergency, operation, and maintenance manuals. In addition to items specified in Division 01 Section "Operation and Maintenance Data," include the following:
   1. Manufacturer's written instructions for testing and adjusting overcurrent protective devices.
   2. Time-current curves, including selectable ranges for each type of overcurrent protective device.

1.05 PROJECT CONDITIONS

A. Interruption of Existing Electric Service: Do not interrupt electric service to facilities occupied by Owner or others unless permitted under the following conditions and then only after arranging to provide temporary electric service according to requirements indicated:
   1. Notify Architect and Owner no fewer than 14 days in advance of proposed interruption of electrical service.
   2. Do not proceed with interruption of electrical service without Architects and Owners written permission.

1.06 COORDINATION

A. Coordinate layout and installation of panelboards and components with other construction that penetrates walls or is supported by them, including electrical and other types of equipment, raceways, piping, and encumbrances to workspace clearance requirements.

PART 2 - PRODUCTS

2.01 MANUFACTURERS

A. Available Manufacturers: Subject to compliance with requirements, manufacturers offering products that may be incorporated into the Work include, but are not limited to, the following:

B. Manufacturers: Subject to compliance with requirements, provide products by one of the following:
   1. Panelboards, Overcurrent Protective Devices, Controllers, Contactors, and Accessories:
      a. Eaton Corporation; Cutler-Hammer Products.
      b. General Electric Co.; Electrical Distribution & Protection Div.
      c. Square D.

2.02 MANUFACTURED UNITS

A. Enclosures: Flush- and surface-mounted cabinets. NEMA PB 1, Type 1.
   1. Rated for environmental conditions at installed location.
      a. Outdoor Locations: NEMA 250, Type 3R unless noted otherwise.
      b. Kitchen Areas: NEMA 250, Type 4X, stainless steel.
      c. Other Wet or Damp Indoor Locations: NEMA 250, Type 4.
      d. Hazardous Areas Indicated on Drawings: NEMA 250, Type 7C.
   2. Front: Secured to box with concealed trim clamps. For surface-mounted fronts, match box dimensions; for flush-mounted fronts, overlap box.
   3. Skirt for Surface-Mounted Panelboards: Same gage and finish as panelboard front with flanges for attachment to panelboard, wall, and ceiling or floor.
   4. Gutter Extension and Barrier: Same gage and finish as panelboard enclosure; integral with enclosure body. Arrange to isolate individual panel sections.
   5. Column-Type Panelboards: Narrow gutter extension, with cover, to overhead junction box equipped with ground and neutral terminal buses.
   6. Finish: Manufacturer's standard enamel finish over corrosion-resistant treatment or primer coat.
   7. Directory Card: With transparent protective cover, mounted in metal frame, inside panelboard door.
   8. Identifying nameplate with full description as specified in Section 260553.

B. Phase and Ground Buses:
   1. Material: Hard-drawn copper, 98 percent conductivity.
   2. Equipment Ground Bus: Adequate for feeder and branch-circuit equipment ground conductors; bonded to box.
   3. Isolated Equipment Ground Bus: Adequate for branch-circuit equipment ground conductors; insulated from box.
   4. Extra-Capacity Neutral Bus: Neutral bus rated 200 percent of phase bus and UL listed as suitable for nonlinear loads.

C. Conductor Connectors: Suitable for use with conductor material.
   1. Main and Neutral Lugs: Compression type.
   2. Ground Lugs and Bus Configured Terminators: Compression type.
   3. Feed-Through Lugs: Compression type suitable for use with conductor material. Locate at opposite end of bus from incoming lugs or main device.
   4. Extra-Capacity Neutral Lugs: Rated 200 percent of phase lugs mounted on extra-capacity neutral bus.

D. Service Equipment Label: UL labeled for use as service equipment for panelboards with main service disconnect switches.

E. Future Devices: Mounting brackets, bus connections, and necessary appurtenances required for future installation of devices.

2.03 PANELBOARD SHORT-CIRCUIT RATING

A. UL label indicating connected rating with integral or remote upstream overcurrent protective devices. Include size and type of upstream device allowable, branch devices allowable, and UL connected short-circuit rating. Series rated panels and related circuit breakers are not acceptable.

B. Fully rated to interrupt symmetrical short-circuit current available at terminals.

2.04 DISTRIBUTION PANELBOARDS

A. Doors: Secured with vault-type latch with tumbler lock; keyed alike. Omit for fused-switch panelboards.

B. Main Overcurrent Protective Devices: Circuit Breaker.

C. Branch Overcurrent Protective Devices:
   1. For Circuit-Breaker Frame Sizes 125 A and Smaller: Bolt-on type circuit breakers.
   2. For Circuit-Breaker Frame Sizes Larger Than 125 A: Bolt-on circuit breakers.

2.05 LIGHTING AND APPLIANCE BRANCH-CIRCUIT PANELBOARDS

A. Branch Overcurrent Protective Devices: Bolt-on type circuit breakers, replaceable without disturbing adjacent units.

B. Doors: Concealed hinges; secured with flush latch with tumbler lock; keyed alike.

2.06 OVERCURRENT PROTECTIVE DEVICES

A. Molded-Case Circuit Breaker: UL 489, with interrupting capacity to meet available fault currents.

1. Thermal-Magnetic Circuit Breakers: Inverse time-current element for low-level overloads, and instantaneous magnetic trip element for short circuits. Adjustable magnetic trip setting for circuit-breaker frame sizes 250 A and larger.
2. Adjustable Instantaneous-Trip Circuit Breakers: Magnetic trip element with front-mounted, field-adjustable trip setting.
3. Electronic trip-unit circuit breakers shall have RMS sensing; field-replaceable rating plug; and with the following field-adjustable settings:
   a. Instantaneous trip.
   b. Long- and short-time pickup levels.
   c. Long- and short-time time adjustments.
   d. Ground-fault pickup level, time delay, and I2t response.
4. Current-Limiting Circuit Breakers: Frame sizes 400 A and smaller; let-through ratings less than NEMA FU 1, RK-5.
5. Integrally Fused Circuit Breakers: Thermal-magnetic trip element with integral limiter-style fuse listed for use with circuit breaker; trip activation on fuse opening or on opening of fuse compartment door.
6. GFCI Circuit Breakers: Single- and two-pole configurations with 5-mA trip sensitivity.

B. Molded-Case Circuit-Breaker Features and Accessories: Standard frame sizes, trip ratings, and number of poles.
1. Lugs: Compression style, suitable for number, size, trip ratings, and conductor materials.
2. Application Listing: Appropriate for application; Type SWD for switching fluorescent lighting loads; Type HACR for heating, air-conditioning, and refrigerating equipment.
3. Ground-Fault Protection: Integrally mounted relay and trip unit with adjustable pickup and time-delay settings, push-to-test feature, and ground-fault indicator.
4. Communication Capability: Universal-mounted communication module with functions and features compatible with power monitoring and control system specified in Division 26 Section "Electrical Power Monitoring and Control."
5. Shunt Trip: 120-V trip coil energized from separate circuit, set to trip at 55 percent of rated voltage.
6. Undervoltage Trip: Set to operate at 35 to 75 percent of rated voltage with field-adjustable 0.1- to 0.6-second time delay.
7. Auxiliary Contacts: Two SPDT switches with "a" and "b" contacts; "a" contacts mimic circuit-breaker contacts, "b" contacts operate in reverse of circuit-breaker contacts.
8. Key Interlock Kit: Externally mounted to prohibit circuit-breaker operation; key shall be removable only when circuit breaker is in off position.
9. Zone-Selective Interlocking: Integral with electronic trip unit; for interlocking ground-fault protection function.
10. Multipole units enclosed in a single housing or factory-assembled to operate as a single unit.

C. Fused Switch: NEMA KS 1, Type HD; clips to accommodate specified fuses; lockable handle.

2.07 ACCESSORY COMPONENTS AND FEATURES

A. Furnish accessory set including tools and miscellaneous items required for overcurrent protective device test, inspection, maintenance, and operation.

B. Furnish portable test set to test functions of solid-state trip devices without removal from panelboard.

PART 3 - EXECUTION

3.01 INSTALLATION

A. Install panelboards and accessories according to NEMA PB 1.1.

B. Mount top of trim 74 inches (1880 mm) above finished floor, unless otherwise indicated.

C. Install overcurrent protective devices and controllers.
   1. Set field-adjustable switches and circuit-breaker trip ranges.

D. Install filler plates in unused spaces.

E. Arrange conductors in gutters into groups and bundle and wrap with wire ties after completing load balancing in a neat and professional manor.

3.02 IDENTIFICATION

A. Identify field-installed conductors, interconnecting wiring, and components; provide warning signs as specified in Division 26 Section "Identification for Electrical Systems."

B. Create a directory to indicate installed circuit loads (after balancing panelboard loads). Obtain approval from Architect of description or areas served before installing. The Contractor shall be responsible for updating directories to indicate actual area served which is not necessarily the description indicated on the bid documents. Use a computer or typewriter to create directory; handwritten directories are not acceptable.

C. Panelboard Nameplates: Label each panelboard with engraved metal or laminated-plastic nameplate mounted with corrosion-resistant screws or rivets.

3.03 CONNECTIONS

A. Ground equipment according to Division 26 Section "Grounding and Bonding for Electrical Systems."

B. Connect wiring according to Division 26 Section "Low-Voltage Electrical Power Conductors and Cables."

3.04 CLEANING

A. On completion of installation, inspect interior and exterior of panelboards. Remove paint splatters and other spots. Vacuum dirt and debris prior to pulling any conductors; do not use compressed air to assist in cleaning. Repair exposed surfaces to match original finish.

PART 4 – PAYMENT

Payment for the aforementioned specifications for "Panelboards" shall be considered as included in the LS work associated with the Electrical – Storage Building bid item and no additional payment will be made therefore.

END OF SECTION

SECTION 26 51 00 INTERIOR LIGHTING

PART 1 - GENERAL

1.1 RELATED DOCUMENTS

A. Drawings and general provisions of the Contract, including General and Supplementary Conditions and Division 01 Specification Sections, apply to this Section.

1.2 SUMMARY

A. Section Includes:

1. Interior lighting fixtures, lamps, and ballasts.
2. Exit signs.

1.3 REFERENCE STANDARDS

A. ANSI C78.379 - American National Standard for Electric Lamps -- Reflector Lamps -- Classification of Beam Patterns; 2006.

B. ANSI C82.1 - American National Standard for Lamp Ballast - Line Frequency Fluorescent Lamp Ballast; 2004.

C. ANSI C82.11 - American National Standard for Lamp Ballasts - High Frequency Fluorescent Lamp Ballasts - Supplements; 2011.

D. IEEE C62.41.2 - Recommended Practice on Characterization of Surges in Low-Voltage (1000 V and less) AC Power Circuits; 2002 (R2008).

E. IESNA LM-63 - ANSI Approved Standard File Format for Electronic Transfer of Photometric Data and Related Information; 2002 (Reaffirmed 2008).

F. NECA 1 - Standard for Good Workmanship in Electrical Construction; National Electrical Contractors Association; 2010.

G. NECA/IESNA 500 - Standard for Installing Indoor Commercial Lighting Systems; National Electrical Contractors Association; 2006.

H. NEMA 410 - Performance Testing for Lighting Controls and Switching Devices with Electronic Drivers and Discharge Ballasts; National Electrical Manufacturers Association; 2011.

I. NEMA LE 4 - Recessed Luminaires, Ceiling Compatibility; National Electrical Manufacturers Association; 2012.

J. NEMA WD 6 - Wiring Devices - Dimensional Requirements; National Electrical Manufacturers Association; 2002 (R2008).

K. NFPA 70 - National Electrical Code; National Fire Protection Association; Most Recent Edition Adopted by Authority Having Jurisdiction, Including All Applicable Amendments and Supplements.

L. NFPA 101 - Life Safety Code; National Fire Protection Association; 2012.

M. UL 924 - Emergency Lighting and Power Equipment; Current Edition, Including All Revisions.

N. UL 1598 - Luminaires; Current Edition, Including All Revisions.

O. UL 8750 - Light Emitting Diode (LED) Equipment for Use in Lighting Products; Current Edition, Including All Revisions.

1.4 ADMINISTRATIVE REQUIREMENTS

A. Coordination:
1. Coordinate the installation of luminaires with mounting surfaces installed under other sections or by others. Coordinate the work with placement of supports, anchors, etc. required for mounting. Coordinate compatibility of luminaires and associated trims with mounting surfaces at installed locations.
2. Coordinate the placement of luminaires with structural members, ductwork, piping, equipment, diffusers, fire suppression system components, and other potential conflicts installed under other sections or by others.
3. Coordinate the placement of exit signs with furniture, equipment, signage or other potential obstructions to visibility installed under other sections or by others.
4. Notify Architect of any conflicts or deviations from the contract documents to obtain direction prior to proceeding with work.

B. ANSI/CEC - National Electrical Code.

C. ANSI/NFPA 101 - Life Safety Code.

D. Title-24 C.C.R.

1.5 DEFINITIONS

A. BF: Ballast factor.

B. CCT: Correlated color temperature.

C. CRI: Color-rendering index.

D. LER: Luminaire efficacy rating.

E. Lumen: Measured output of lamp and luminaire, or both.

F. Luminaire: Complete lighting fixture, including ballast housing if provided.

1.6 ACTION SUBMITTALS

A. Product Data: For each type of lighting fixture, arranged in order of fixture designation. Include data on features, accessories, finishes, and the following:
1. Physical description of lighting fixture including dimensions.
2. Emergency lighting units including battery and charger.
3. Energy-efficiency data.
4. Life, output (lumens, CCT, and CRI), and energy-efficiency data for lamps.

1.7 MAINTENANCE MATERIAL SUBMITTALS

A. Furnish 5% extra light fixtures for every type being provided.

1.8 QUALITY ASSURANCE

A. Luminaire Photometric Data Testing Laboratory Qualifications: Provided by manufacturers' laboratories that are accredited under the National Volunteer Laboratory Accreditation Program for Energy Efficient Lighting Products.

B. Electrical Components, Devices, and Accessories: Listed and labeled as defined in NFPA 70, by a qualified testing agency, and marked for intended location and application.

C. Comply with NFPA 70.

1.9 COORDINATION

A. Coordinate layout and installation of lighting fixtures and suspension system with other construction that penetrates ceilings or is supported by them, including HVAC equipment, fire-suppression system, and partition assemblies.

1.10 WARRANTY

A. Special Warranty for Emergency Lighting Batteries: Manufacturer's standard form in which manufacturer of battery-powered emergency lighting unit agrees to repair or replace components of rechargeable batteries that fail in materials or workmanship within specified warranty period.

Manufacturer's Warranty: All equipment shall be warranted free of defects in materials and workmanship.

1. Warranty Period: All system components shall be warranted for at least three (3) years from date of system commissioning.
2. Owner's Rights: Manufacturer's warranty is in addition to, not a limitation of, other rights the Owner may have under contract documents.

PART 2 - PRODUCTS

2.1 MANUFACTURERS

A. Products: Subject to compliance with requirements, provide product indicated on Drawings.

2.2 GENERAL REQUIREMENTS FOR LIGHTING FIXTURES AND COMPONENTS

A. Recessed Fixtures: Comply with NEMA LE 4 for ceiling compatibility for recessed fixtures.

B. Metal Parts: Free of burrs and sharp corners and edges.

C. Sheet Metal Components: Steel unless otherwise indicated. Form and support to prevent warping and sagging.

D. Doors, Frames, and Other Internal Access: Smooth operating, free of light leakage under operating conditions, and designed to permit relamping without use of tools. Designed to prevent doors, frames, lenses, diffusers, and other components from falling accidentally during relamping and when secured in operating position.

E. Factory-Applied Labels: Comply with UL 1598. Include recommended lamps and ballasts. Labels shall be located where they will be readily visible to service personnel, but not seen from normal viewing angles when lamps are in place.

1. Label shall include the following lamp and ballast characteristics:
   a. "USE ONLY" and include specific lamp type.

b. LED Diode Code
c. CCT and CRI for all luminaires.

2.3 EXIT SIGNS

A. General Requirements for Exit Signs: Comply with UL 924; for sign colors, visibility, luminance, and lettering size, comply with authorities having jurisdiction.

B. Internally Lighted Signs:
1. Lamps for AC Operation: LEDs, 50,000 hours minimum rated lamp life.
a. Battery: Sealed, maintenance-free, nickel-cadmium type.
b. Charger: Fully automatic, solid-state type with sealed transfer relay.
c. Operation: Relay automatically energizes lamp from battery when circuit voltage drops to 80 percent of nominal voltage or below. When normal voltage is restored, relay disconnects lamps from battery, and battery is automatically recharged and floated on charger.
d. Test Push Button: Push-to-test type, in unit housing, simulates loss of normal power and demonstrates unit operability.
e. LED Indicator Light: Indicates normal power on. Normal glow indicates trickle charge; bright glow indicates charging at end of discharge cycle.
f. Integral Self-Test: Factory-installed electronic device automatically initiates code-required test of unit emergency operation at required intervals. Test failure is annunciated by an integral audible alarm and a flashing red LED.

2.4 LIGHTING FIXTURE SUPPORT COMPONENTS

A. Comply with Section 260529 "Hangers and Supports for Electrical Systems" for channel- and angle-iron supports and nonmetallic channel and angle supports.

B. Single-Stem Hangers: 1/2-inch steel tubing with swivel ball fittings and ceiling canopy. Finish same as fixture.

C. Twin-Stem Hangers: Two, 1/2-inch steel tubes with single canopy designed to mount a single fixture. Finish same as fixture.

D. Wires: ASTM A 641/A 641M, Class 3, soft temper, zinc-coated steel, **12 gage**.

E. Rod Hangers: 3/16-inch minimum diameter, cadmium-plated, threaded steel rod.

2.5 LED LIGHT FIXTURES

A. General:
1. LED light fixtures shall be in accordance with IES, NFPA, UL, as shown on the drawings, and as specified.
2. LED light fixtures shall be Reduction of Hazardous Substances (RoHS)-compliant.
3. LED drivers shall include the following features unless otherwise indicated:
a. Minimum efficiency: 85% at full load.
b. Minimum Operating Ambient Temperature: -20˚ C. (-4˚ F.)
c. Input Voltage: 120 - 277V (±10%) at 60 Hz.
d. Integral short circuit, open circuit, and overload protection.
e. Power Factor: ≥ 0.95.
f. Total Harmonic Distortion: ≤ 20%.
g. Comply with FCC 47 CFR Part 15.
4. LED modules shall include the following features unless otherwise indicated:

a. Comply with IES LM-79 and LM-80 requirements.
b. Minimum CRI 80 and color temperature 3000˚ K unless otherwise specified in LIGHTING FIXTURE SCHEDULE.
c. Minimum Rated Life: 50,000 hours per IES L70.
d. Light output lumens as indicated in the LIGHTING FIXTURE SCHEDULE.

B. LED Downlights:
1. Housing, LED driver, and LED module shall be products of the same manufacturer.

C. LED Troffers:
1. LED drivers, modules, and reflector shall be accessible, serviceable, and replaceable from below the ceiling.
2. Housing, LED driver, and LED module shall be products of the same manufacturer.

2.6 DAYLIGHIT HARVESTING
A. General:
1. Daylight Harvesting: Allows interior and/or exterior photocells to control lighting levels in response to the available daylight

B. General — provide ballasts that:
1. Are dimmable from 100% to 1%
2. Connect without hardware interface to the following devices
a. Occupant sensor (motion detector)
b. Daylight sensor

C. Five Button Digital Switch — supply switches that:
1. Control one group of fixtures with the following commands
a. Max: 100% illumination.
b. Bright: incrementally raises illumination.
c. Dim: incrementally lowers illumination level.
d. Daylight Harvesting On.
e. All fixtures Off.

2.8 SENSORS
A. General — provide occupancy and daylight sensors that:
1. Are compatible with Class I and Class II wiring
2. Can be replaced without reprogramming
3. Have consistent color:
a. Match NEMA WD1, Section 2 White.
b. Color variation in same product family: Maximum ΔE=1, CIE L*a*b color units.
c. Visible parts: Exhibit ultraviolet color stability when tested with multiple actinic light sources as defined in ASTM D4674. Provide proof of testing upon request.
4. Mount to the ceiling

B. Infrared Receivers — supply infrared receivers that:
1. Have 360-degree reception of wireless infrared remote controls.
2. Indicate reception of communication from a hand held transmitter communication with an LED
3. Are constructed of plastic meeting UL94 HB

C. Interior Daylight Sensors — supply sensors that:

1. Accommodate a topology-free control scheme
2. Maintain stable output over temperatures from 0º to 40º C (32° to 104° F)
3. Are partially shielded for accurate detection of available daylight
   a. Sensor detection shall not be skewed by fixture lighting and horizontal light component
4. Have linear response from 0 to 100 foot-candles.
5. Have integral IR receivers
6. Are constructed of plastic meeting UL94 HB

PART 3 - EXECUTION

3.1 INSTALLATION

A. Lighting fixtures:
   1. Set level, plumb, and square with ceilings and walls unless otherwise indicated.
   2. Install lamps in each luminaire.

B. Temporary Lighting: If it is necessary, and approved by Architect, to use permanent luminaires for temporary lighting, install and energize the minimum number of luminaires necessary. When construction is sufficiently complete, remove the temporary luminaires, disassemble, clean thoroughly, install new lamps, and reinstall.

C. Remote Mounting of Ballasts: Distance between the ballast and fixture shall not exceed that recommended by ballast manufacturer. Verify, with ballast manufacturers, maximum distance between ballast and luminaire.

D. Lay-in Ceiling Lighting Fixtures Supports: Use grid as a support element.
   1. Install ceiling support system rods or wires, independent of the ceiling suspension devices, for each fixture. Locate not more than 6 inches from lighting fixture corners.
   2. Support Clips: Fasten to lighting fixtures and to ceiling grid members at or near each fixture corner with clips that are UL listed for the application.
   3. Fixtures of Sizes Less Than Ceiling Grid: Install as indicated on reflected ceiling plans or center in acoustical panel, and support fixtures independently with at least two 3/4-inch metal channels spanning and secured to ceiling tees.

E. Suspended Lighting Fixture Support:
   1. Pendants and Rods: Where longer than 48 inches, brace to limit swinging.
   2. Stem-Mounted, Single-Unit Fixtures: Suspend with twin-stem hangers.
   3. Continuous Rows: Use tubing or stem for wiring at one point and tubing or rod for suspension for each unit length of fixture chassis, including one at each end.
   4. Do not use grid as support for pendant luminaires. Connect support wires or rods to building structure.

F. Air-Handling Lighting Fixtures: Install with dampers closed and ready for adjustment.

G. Connect wiring according to Section 260519 "Low-Voltage Electrical Power Conductors and Cables."

H. Ensure that daylight sensor placement minimizes sensors view of electric light sources; ceiling mounted and fixture-mounted daylight sensors shall not have direct view of luminaires

3.2 IDENTIFICATION

A. Install labels with panel and circuit numbers on concealed junction and outlet boxes. Comply with requirements for identification specified in Section 260553 "Identification for Electrical Systems."

3.3 FIELD QUALITY CONTROL

A. Test for Emergency Lighting: Interrupt power supply to demonstrate proper operation. Verify transfer from normal power to battery and retransfer to normal.

B. Verify that self-luminous exit signs are installed according to their listing and the requirements in NFPA 101.

C. Prepare a written report of tests, inspections, observations, and verifications indicating and interpreting results. If adjustments are made to lighting system, retest to demonstrate compliance with standards.

3.4 STARTUP SERVICE

A. Burn-in all lamps that require specific aging period to operate properly, prior to occupancy by Owner. Burn-in fluorescent and compact fluorescent lamps intended to be dimmed, for at least 100 hours at full voltage.

3.5 ADJUSTING

A. Occupancy Adjustments: When requested within 12 months of date of Substantial Completion, provide on-site assistance in adjusting aimable luminaires to suit actual occupied conditions. Provide up to two visits to Project during other-than-normal occupancy hours for this purpose. Some of this work may be required after dark.

1. Adjust aimable luminaires in the presence of Architect.

PART 4 - PAYMENT

Payment for the aforementioned specifications for “Interior Lighting” shall be considered as included in the LS work associated with the Electrical – Storage Building bid item and no additional payment will be made therefore.

END OF SECTION

SECTION 26 56 00 EXTERIOR LUMINAIRES

PART 1 GENERAL

1.01 SCOPE

A. This section supplements all sections of this division and shall apply to all phases of work hereinafter specified, shown on the drawings, or required to provide a complete installation of electrical systems for the Project. The work required under this division is not limited to the electrical specifications and drawings. Refer to all bid documents including Civil, Architectural, Structural, and Mechanical documents which may designate Work to be accomplished. The intent of the Specifications is to provide a complete and operable electrical system, which shall include all documents that are a part of the entire Project Contract.
   1. Work included: Furnish all labor, material, tools, equipment, facilities, transportation, skilled supervision necessary for, and incidental to, performing operations in connection with furnishing, delivery, and installation of the work in this division complete as shown or noted on the Drawings and specified herein.

B. Related Work Specified Elsewhere:
   1. Refer to all sections in the general contract conditions, Contract Requirements and Division 01, General Requirements.

C. Work Installed but Furnished by Others:
   1. The electrical work includes the installation or connection of certain materials and equipment furnished by others. Verify installation details. Foundations for apparatus and equipment will be furnished by others unless otherwise noted or detailed.

1.02 GENERAL REQUIREMENTS

A. Guarantee See General Conditions:
   1. Except as may be specified under other Sections in the specification, guarantee equipment furnished under the specifications for a period of one year, except for equipment required to have a longer guarantee period, from date of final completion. Guarantee all work against defective workmanship, material, and improper installation. Upon notification of failure, correct deficiency immediately and without additional cost to the City.
   2. Standard warranty of manufacturer shall apply for replacement of parts after expiration of the above period. Manufacturer shall furnish replacement parts to the City or his service agency as approved. Furnish to the City, through the Architect, printed manufacturer's warranties complete with material included and expiration dates, upon completion of project. Conform to Division 01.

B. Equipment Safety: All electrical materials and equipment shall be new and shall be listed by Underwriter's Laboratories and bear their label, or listed and certified by a nationally recognized testing authority where UL does not have an approval. Custom made equipment must have complete test data submitted by the manufacturer attesting to its safety.

C. Codes and Regulations:
   1. Design, manufacturer, testing and method of installation of all apparatus and materials furnished under the requirements of these specifications shall conform to the latest publications or standard rules of the following:

A. ANSI C78.379 - American National Standard for Electric Lamps -- Reflector Lamps -- Classification of Beam Patterns; 2006.

B. ANSI C82.1 - American National Standard for Lamp Ballast - Line Frequency Fluorescent Lamp Ballast; 2004.

C. ANSI C82.4 - American National Standard for Ballasts for High-Intensity-Discharge and Low Pressure Sodium Lamps (Multiple-Supply Type); 2002.

D. ANSI C82.11 - American National Standard for Lamp Ballasts - High Frequency Fluorescent Lamp Ballasts - Supplements; Consolidated-2002.

E. IEEE C62.41.2 - Recommended Practice on Characterization of Surges in Low-Voltage (1000 V and less) AC Power Circuits; 2002 (R2008).

F. IESNA LM-63 - ANSI Approved Standard File Format for Electronic Transfer of Photometric Data and Related Information; 2002.

G. IESNA RP-8 - American National Standard Practice for Roadway Lighting; Illuminating Engineering Society of North America; 2000(R2005) (ANSI/IES RP8).

H. NECA 1 - Standard for Good Workmanship in Electrical Contracting; National Electrical Contractors Association; 2006.

I. NECA/IESNA 501 - Recommended Practice for Installing Exterior Lighting Systems; 2006.

J. NFPA 70 - National Electrical Code; National Fire Protection Association; 2016.

K. UL 935 - Fluorescent-Lamp Ballasts; Current Edition, Including All Revisions.

L. UL 1029 - High-Intensity-Discharge Lamp Ballasts; Current Edition, Including All Revisions.

M. UL 1598 - Luminaires; Current Edition, Including All Revisions.

N. UL 8750 - Light Emitting Diode (LED) Equipment for Use in Lighting Products; Current Edition, Including All Revisions.

1.03 ADMINISTRATIVE REQUIREMENTS

A. Coordination: Furnish bolt templates and pole mounting accessories to installer of pole foundations.

1.04 QUALITY ASSURANCE

A. Conform to requirements of NFPA 70.

B. Manufacturer Qualifications: Company specializing in manufacturing the products specified in this section with minimum three years documented experience.

C. Electrical Components: Listed and classified by Underwriters Laboratories Inc. as suitable for the purpose specified and indicated.

1.05 DELIVERY, STORAGE, AND HANDLING

A. Receive, handle, and store products according to NECA/IESNA 501 and manufacturer's written

instructions.

B. Keep products in original manufacturer's packaging and protect from damage until ready for installation.

C. Receive, handle, and store wood poles in accordance with ANSI O5.1.

PART 2 PRODUCTS

2.01 LUMINAIRE TYPES

A. Furnish products as indicated in luminaire schedule included on the Drawings.

2.02 LUMINAIRES

A. Provide products that comply with requirements of NFPA 70.

B. Provide products that are listed and labeled as complying with UL 1598, where applicable.

C. Provide products listed and classified by Underwriters Laboratories Inc. as suitable for the purpose specified and indicated.

D. Unless otherwise indicated, provide complete luminaires including lamp(s) and all sockets, ballasts, reflectors, lenses, housings and other components required to position, energize and protect the lamp and distribute the light.

E. Unless specifically indicated to be excluded, provide all required conduit, boxes, wiring, connectors, hardware, poles, foundations, supports, trims, accessories, etc. as necessary for a complete operating system.

F. Provide products suitable to withstand normal handling, installation, and service without any damage, distortion, corrosion, fading, discoloring, etc.

G. Provide luminaires listed and labeled as suitable for wet locations unless otherwise indicated.

H. LED Luminaires: Listed and labeled as complying with UL 8750. Include estimated useful life, calculated based on IES LM-80 test data.

2.03 LAMPS

A. LED Luminaires:

1. Components: UL 8750 recognized or listed as applicable.

2. Tested in accordance with IES LM-79 and IES LM-80.

3. LED Estimated Useful Life: Minimum of 50,000 hours at 70 percent lumen maintenance, calculated based on IES LM-80 test data.

2.04 POLES

A. All Poles:

1. Provide poles and associated support components suitable for the luminaire(s) and associated supports and accessories to be installed.
2. All poles shall be galvanized steel

PART 3 EXECUTION

3.01 INSTALLATION

A. Coordinate locations of outlet boxes provided under Section 16138 as required for installation of luminaires provided under this section.

B. Install products according to manufacturer's instructions.

C. Install luminaires securely, in a neat and workmanlike manner, as specified in NECA 1 (general workmanship) and NECA/IESNA 501 (exterior lighting).

D. Install luminaires plumb and square and aligned with building lines and with adjacent luminaires.

E. Install accessories furnished with each luminaire.

F. Bond products and metal accessories to branch circuit equipment grounding conductor.

G. Provide concrete bases for lighting poles at locations indicated, in accordance with Section 03300.

H. Install poles plumb.
   1. Provide shims to adjust plumb.
   2. Grout around each base.

I. Install lamps in each luminaire.

J. Bond luminaires, metal accessories, and metal poles to branch circuit equipment grounding conductor. Provide supplementary grounding electrode at each pole.

3.02 FIELD QUALITY CONTROL

A. See Section 01400 - Quality Requirements, for additional requirements.

B. Inspect each product for damage and defects.

C. Perform field inspection, testing, and adjusting in accordance with Section 01400.

D. Operate each luminaire after installation and connection to verify proper operation.

E. Correct wiring deficiencies and repair or replace damaged or defective products. Repair or replace excessively noisy ballasts as determined by Architect.

F. Measure illumination levels to verify conformance with performance requirements. Take measurements during night sky, without moon or with heavy overcast clouds effectively obscuring moon.

3.03 ADJUSTING

A. Aim and position adjustable luminaires to achieve desired illumination as indicated or as directed by Architect. Secure locking fittings in place.

B. Aim and adjust luminaires to provide illumination levels and distribution indicated on Drawings.

3.04 CLEANING

A. Clean surfaces according to NECA/IESNA 501 and manufacturer's instructions to remove dirt, fingerprints, paint, or other foreign material and restore finishes to match original factory finish.

B. Clean electrical parts to remove conductive and deleterious materials.

C. Remove dirt and debris from enclosure.

D. Clean photometric control surfaces as recommended by manufacturer.

E. Clean finishes and touch up damage.

3.05CLOSEOUT ACTIVITIES

3.06SCHEDULE - See Drawings

PART 4 – PAYMENT

Payment for the aforementioned specifications for "Exterior Luminaires" shall be considered as included in the LS work associated with the Electrical – Parking Lot and Electrical – Storage Building bid items and no additional payment will be made therefore.

END OF SECTION

SECTION F -
MISCELLANEOUS CONTRACT DOCUMENTS (SAMPLE)

(Blank page)

1 – AGREEMENT (SAMPLE)

CITY OF COSTA MESA
PUBLIC WORKS AGREEMENT FOR
CITY PROJECT NO. 20-18

THIS PUBLIC WORKS AGREEMENT ("Agreement"), dated _____ ("Effective Date"), is made by the CITY OF COSTA MESA, a political subdivision of the State of California ("CITY"), and _____, a [state] [type of organization] ("CONTRACTOR").

CITY desires to construct the public work and improvements described below under Scope of Work, Paragraph 1 ("Work").

ACCORDINGLY, the parties hereto agree as follows:

1. SCOPE OF WORK.

The Work consists of _____.

The Work is further described in the "Contract Documents" referred to below.

The Project is known as _____, City Project No. ____ ("Project").

2. CONTRACT DOCUMENTS.

The complete Agreement consists of the following documents relating to the Project:

a. This Agreement;
b. CONTRACTOR's bid;
c. Notice inviting bids;
d. Complete plans, profiles, detailed drawings and specifications, including general provisions and special provisions;
e. Certificates of Insurance;
f. Faithful Performance Bond and Labor and Material Bond, including agent's Power of Attorney for each bond;

SAMPLE

g. Supplements, attachments, and exhibits attached to the above items;

h. Provisions of the most current edition of The Greenbook: Standard Specifications for Public Works Construction ("The Greenbook"); and

i. All addenda setting forth any modifications or interpretations of the above documents.

The documents attached hereto are incorporated herein by this reference. The Greenbook is incorporated by reference as if fully set forth herein. The documents comprising the complete Agreement will be referred to as the "Contract Documents."

All of the Contract Documents are intended to complement one another, so that any Work called for in one and not mentioned in another is to be performed as if mentioned in all documents.

In the event of an inconsistency in the Contract Documents, the terms of this Agreement shall prevail over all other Contract Documents. The order of precedence between the remaining Contract Documents shall be as set forth in The Greenbook.

The Contract Documents constitute the entire agreement between the parties and supersede any and all other writings and oral negotiations.

3. CITY'S REPRESENTATIVE.

The CITY's Representative is _____, referred to herein as the Project Manager ("Project Manager").

4. CONTRACTOR'S PROJECT MANAGER; PERSONNEL.

(a) Project Manager. CONTRACTOR's Project Manager must be approved by City. Such approval shall be at CITY's sole discretion.

(b) Personnel. CITY has the right to review and approve any personnel who are assigned to perform work under this Agreement. CONTRACTOR shall remove personnel from performing work under this Agreement if requested to do so by CITY.

SAMPLE

This Paragraph 4 is a material provision of the Agreement.

5. SCHEDULE.

All Work shall be performed in accordance with the schedule approved on behalf of CITY by the Project Manager, and in accordance with the time of performance set forth in Paragraph 8 (Time of Performance).

6. EQUIPMENT - PERFORMANCE OF WORK.

CONTRACTOR shall furnish all tools, equipment, apparatus, facilities, labor and materials necessary to perform and complete the Work of construction in a good and workmanlike manner in strict conformity with the Contract Documents.

The equipment, apparatus, facilities, labor and material shall be furnished and such Work performed and completed as required in the plans and specifications to the satisfaction of the Project Manager or his or her designee, and subject to his or her approval.

7. CONTRACT PRICE.

_____ ($_____.00).

8. TIME OF PERFORMANCE.

CONTRACTOR shall commence Work by the date specified in CITY's Notice to Proceed, unless a later date is agreed upon in writing by the parties. The Work shall be completed within _____ [working/calendar] days from the first day of commencement of the Work.

9. TERMINATION.

(a) Termination for Convenience.

CITY may terminate this Agreement at any time, with or without cause, by providing thirty (30) days' written notice to CONTRACTOR.

SAMPLE

(b) Termination for Breach of Contract.

(i) If CONTRACTOR refuses or fails to prosecute the Work or any severable part of it with such diligence as will ensure its timely completion, or if CONTRACTOR fails to complete the Work on time, or if CONTRACTOR, or any subcontractor, violates any of the provisions of the Contract Documents, the Project Manager may give written notice to CONTRACTOR and CONTRACTOR's sureties of the CITY's intention to terminate this Agreement; and, unless within five (5) days after the serving of that notice, such conduct shall cease and arrangements for the correction thereof be made to the satisfaction of the CITY, this Agreement may be terminated at the option of CITY effective upon CONTRACTOR's receipt of a second notice sent by the CITY indicating that the CITY has exercised its option to terminate.

(ii) If CONTRACTOR is adjudged bankrupt or files for any relief under the Federal Bankruptcy Code or State insolvency laws, this Agreement shall automatically terminate without any further action or notice by CITY.

(iii) If CONTRACTOR is in breach of any material provision of this Agreement, CITY may immediately terminate this Agreement by providing written notice to CONTRACTOR of same.

10. LIQUIDATED DAMAGES.

In the event the Work is not completed, for any reason, within the time required including any approved extensions of time, and to the satisfaction of the Project Manager, CITY may, in addition to any other remedies, equitable and legal, including remedies authorized by Paragraph 9 (Termination) of this Agreement, charge to CONTRACTOR or its sureties, or deduct from payments or credits due CONTRACTOR, a sum equal to _____ as liquidated damages for each day beyond the date provided for the completion of such Work.

SAMPLE

The parties hereto agree that the amount set forth above, as liquidated damages constitutes a fair and reasonable estimate of the costs the CITY would suffer for each day that the CONTRACTOR fails to meet the performance schedule. The parties hereby agree and acknowledge that the delays in the performance schedule will cause CITY to incur costs and expenses not contemplated by this Agreement.

11. PERFORMANCE BY SURETIES.

In the event CONTRACTOR fails or refuses to perform the Work, CITY may provide CONTRACTOR with a notice of intent to terminate as provided in Paragraph 9 (Termination), of this Agreement. The CITY shall immediately give written notice of such intent to terminate to CONTRACTOR and CONTRACTOR's surety or sureties, and the sureties shall have the right to take over and perform this Agreement; provided, however, that the sureties must, within five (5) days after CITY's giving notice of termination, (a) give the CITY written notice of their intention to take over the performance of this Agreement; (b) provide adequate assurances, to the satisfaction of the CITY that the Work shall be performed diligently and in a timely manner; and (c) must commence performance thereof within five (5) days after providing notice to the CITY of their intention to take over the Work. Upon the failure of the sureties to comply with the provisions set forth above, CITY may take over the Work and complete it, at the expense of CONTRACTOR, and the CONTRACTOR and the sureties shall be liable to CITY for any excess costs or damages including those referred to in Paragraph 10 (Liquidated Damages), incurred by CITY. In such event, CITY may, without liability for so doing, take possession of such materials, equipment, tools, appliances, Contract Documents and other property belonging to CONTRACTOR as may be on the site of the Work and reasonably necessary therefor and may use them to complete the Work.

12. DISPUTES PERTAINING TO PAYMENT FOR WORK.

SAMPLE

Should any dispute arise respecting whether any delay is excusable, or its duration, or the value of the Work done, or of any Work omitted, or of any extra Work which CONTRACTOR may be required to do, or respecting any payment to CONTRACTOR during the performance of this Agreement, such dispute shall be decided by the Project Manager, and his or her decisions shall be final and binding upon CONTRACTOR and its sureties.

13. SUPERINTENDENCE BY CONTRACTOR.

At all times during performance of the Work, CONTRACTOR shall give personal superintendence or have a competent foreman or superintendent on the worksite, with authority to act for CONTRACTOR.

14. INSPECTION BY CITY.

CONTRACTOR shall at all times maintain proper facilities and provide safe access for inspection by CITY to all parts of the Work and to all shops on or off-site where the Work or portions of the Work, are in preparation. CITY shall have the right of access to the premises for inspection at all times. However, CITY shall, at all times, comply with CONTRACTOR's safety requirements on the job site.

15. CARE OF THE WORK AND OFF-SITE AUTHORIZATION.

CONTRACTOR warrants that it has examined the site of the Work and is familiar with its topography and condition, location of property lines, easements, building lines and other physical factors and limitations affecting the performance of this Agreement. CONTRACTOR, at CONTRACTOR's sole cost and expense, shall obtain any permission, and all approvals, licenses, or easements necessary for any operations conducted off the premises owned or controlled by CITY. CONTRACTOR shall be responsible for the proper care and protection of all materials delivered to the site or stored off-site and for the Work performed until completion and final inspection and acceptance by CITY. The

SAMPLE

risk, damage or destruction of materials delivered to the site or to Work performed shall be borne by CONTRACTOR.

16. PAYMENTS TO CONTRACTOR.

On or before the last Monday of each and every month during the performance of the Work, CONTRACTOR shall meet with the Project Manager or his or her designee to determine the quantity of pay items incorporated into the improvement during that month. A “Progress Payment Order” will then be jointly prepared, approved, and signed by the Project Manager and the CONTRACTOR setting forth the amount to be paid and providing for a five percent (5%) retention. Upon approval of the progress payment order by the Project Manager, or his or her designee, it shall be submitted to CITY’s Finance Department and processed for payment by obtaining approval from the City Council to issue a warrant.

Within three (3) days following City Council’s approval to issue a warrant, CITY shall mail to CONTRACTOR a warrant for the amount specified in the progress payment order as the amount to be paid. The retained five percent (5%) shall be paid to CONTRACTOR thirty-five (35) days after the recording of the Notice of Completion of the Work by the COUNTY and after CONTRACTOR shall have furnished releases of all claims against CITY by persons who furnished labor or materials for the Work, if required by CITY.

Upon the request of CONTRACTOR and at its expense, securities equivalent to the amount withheld pursuant to the foregoing provisions may be presented to CITY for substitution for the retained funds. If CITY approves the form and amount of the offered securities it will release the retained funds and will hold the securities in lieu thereof. CONTRACTOR shall be entitled to any interest earned on the securities.

In the event that claims for property damage or bodily injury are presented to CITY

SAMPLE

arising out of CONTRACTOR's or any subcontractor's Work under this Agreement; CITY shall give notice thereof to CONTRACTOR, and CONTRACTOR shall have thirty-five (35) days from the mailing of any such notice to evaluate the claim and to settle it by whole or partial payment, or to reject it, and to give notice of settlement or rejection to CITY. If CITY does not receive notice within the above-mentioned 35-day period that the claim has been settled, and if the Project Manager, after consultation with the City Attorney, determines that the claim is meritorious, CITY may pay the claim or a portion of it in exchange for an appropriate release from the claimant, and may deduct the amount of the payment from the retained funds that would otherwise be paid to CONTRACTOR upon completion of the Work; provided, however, that the maximum amount paid for any one claim pursuant to this provision shall be One Thousand Dollars ($1,000.00), and the maximum amount for all such claims in the aggregate paid pursuant to this provision shall be Five Thousand Dollars ($5,000.00).

17. PROMPT PAYMENT OF SUBCONTRACTORS.

The CONTRACTOR agrees to pay each subcontractor under this Agreement for satisfactory performance of its contract no later than seven (7) days from the receipt of each payment the CONTRACTOR receives from CITY.

The CONTRACTOR agrees further to release retainage payments to each subcontractor within thirty (30) days after the subcontractor's work is satisfactorily completed.

Any delay or postponement of payment from the above referenced time frame may occur only for good cause following written approval of the CITY.

18. CONTRACT SECURITY AND GUARANTEE.

Unless previously provided by CONTRACTOR to CITY, CONTRACTOR shall furnish, concurrently with the execution of this Agreement, the following: (1) a surety bond

SAMPLE

in an amount equal to one hundred percent (100%) of the contract price as security for the faithful performance of this Agreement, and (2) a separate surety bond in an amount equal to at least one hundred percent (100%) of the contract price as security for the payment of all persons furnishing labor or materials in connection with the Work under this Agreement. Sureties for each of the bonds and the forms thereof shall be satisfactory to CITY. In addition, such sureties must be authorized to issue bonds in California; sureties must be listed on the latest revision to the U.S. Department of the Treasury Circular 570; and must be shown to have sufficient bonding capacity to provide the bonds required by the Contract Documents.

CONTRACTOR shall provide a certified copy of the certificate of authority of the surety issued by the Insurance Commissioner; a certificate from the clerk of the county in which the court or officer is located that the certificate of authority of the surety has not been surrendered, revoked, canceled, annulled, or suspended or, in the event that it has, that renewed authority has been granted; and copies of the surety's most recent annual statement and quarterly statement filed with the Department of Insurance pursuant to Article 10 (commencing with Section 900) of Chapter 1 of Part 2 of Division 1 of the Insurance Code.

CONTRACTOR guarantees that all materials used in the Work and all labor performed shall be in conformity with the Contract Documents including, but not limited to, the standards and specifications set forth in the most current edition of The Greenbook. CONTRACTOR shall, at its own expense, make any and all repairs and replacements that shall become necessary as the result of any failure of the Work to conform to the aforementioned Contract Documents, and standard specifications; provided, however, that CONTRACTOR shall be obligated under this provision only to the extent of those failures or defects of which he is given notice within a period of twelve (12) months from

SAMPLE

the date that the Notice of Completion is recorded.

The rights and remedies available to CITY pursuant to this provision shall be cumulative with all rights and remedies available to CITY pursuant to statutory and common law, which rights and remedies are hereby expressly reserved, and neither the foregoing guarantee by CONTRACTOR nor its furnishing of the Bonds, nor acceptance thereof by CITY, shall constitute a waiver of any rights or remedies available to CITY against CONTRACTOR.

19. INDEMNIFICATION.

CONTRACTOR agrees to protect, defend, indemnify and hold harmless CITY and its elected and appointed boards, officers, agents, and employees from any and all claims, liabilities, expenses, or damages of any nature, including attorney fees, for injury to or death of any person, and for injury or damage to any property, including consequential damages of any nature resulting therefrom, arising out of or in any way connected with the performance of this Agreement. The defense obligation provided for hereunder shall apply without any advance showing of negligence or wrongdoing by the CONTRACTOR, its employees, and/or authorized subcontractors, but shall be required whenever any claim, action, complaint, or suit asserts as its basis the negligence, errors, omissions or misconduct of the CONTRACTOR, its employees, and/or authorized subcontractors, and/or whenever any claim, action, complaint or suit asserts liability against the CITY, its elected officials, officers, agents and employees based upon the work performed by the CONTRACTOR, its employees, and/or authorized subcontractors under this Agreement, whether or not the CONTRACTOR, its employees, and/or authorized subcontractors are specifically named or otherwise asserted to be liable. Notwithstanding the foregoing, the CONTRACTOR shall not be liable for the defense or indemnification of the CITY for claims, actions, complaints or suits arising out of the sole

SAMPLE

active negligence or willful misconduct of the CITY. This provision shall supersede and replace all other indemnity provisions contained either in the CITY's specifications or CONTRACTOR's proposal, which shall be of no force and effect.

CONTRACTOR shall comply with all of the provisions of the Workers' Compensation insurance laws and Safety in Employment laws of the State of California, including the applicable provisions of Divisions 4 and 5 of the California Labor Code and all amendments thereto and regulations promulgated pursuant thereto, and all similar State, Federal or local laws applicable; and CONTRACTOR shall indemnify and hold harmless CITY from and against all claims, liabilities, expenses, damages, suits, actions, proceedings and judgments, of every nature and description, including attorney fees, that may be presented, brought or recovered against CITY for or on account of any liability under or failure to comply with any of said laws which may be incurred by reason of any Work performed under this Agreement by CONTRACTOR or any subcontractor or others performing on behalf of CONTRACTOR.

CITY does not, and shall not, waive any rights against CONTRACTOR which it may have by reason of the above hold harmless agreements, because of the acceptance by CITY or the deposit with CITY by CONTRACTOR of any or all of the insurance policies described in Paragraph 20 (Insurance) of this Agreement.

The hold harmless agreements by CONTRACTOR shall apply to all liabilities, expenses, claims, and damages of every kind (including but not limited to attorney fees) incurred or alleged to have been incurred, by reason of the operations of CONTRACTOR or any subcontractor or others performing on behalf of CONTRACTOR, whether or not such insurance policies are applicable. CONTRACTOR shall require any and all tiers of subcontractors to afford the same degree of indemnification to the CITY OF COSTA MESA and its elected and appointed boards, officers, agents, and employees that is

SAMPLE

required of CONTRACTOR and shall incorporate identical indemnity provisions in all contracts between CONTRACTOR and all tiers of its subcontractors.

In the event that CONTRACTOR and CITY are sued by a third party for damages caused or allegedly caused by negligent or other wrongful conduct of CONTRACTOR, or by a dangerous condition of CITY's property created by CONTRACTOR or existing while the property was under the control of CONTRACTOR, CONTRACTOR shall not be relieved of its indemnity obligation to CITY by any settlement with any such third party unless that settlement includes a full release and dismissal of all claims by the third party against the CITY.

20. INSURANCE.

CONTRACTOR shall not commence Work under this Agreement until it has obtained all insurance required under this section and CITY has approved the insurance as to form, amount, and carrier, nor shall CONTRACTOR allow any subcontractor to commence any Work until all similar insurance required of the subcontractor has been obtained and approved.

Neither the failure of CONTRACTOR to supply specified insurance policies and coverage, nor the failure of CITY to approve same shall alter or invalidate the provisions of Paragraph 19 (Indemnification) of this Agreement.

(a) Workers' Compensation Insurance.

CONTRACTOR shall obtain and maintain during the life of this Agreement workers' compensation insurance and, if any Work is sublet, CONTRACTOR shall require all tiers of subcontractors to obtain workers' compensation insurance.

All workers' compensation insurance policies shall provide that the insurance may not be canceled without thirty (30) days' advance written notice of such cancellation to CITY.

SAMPLE

CONTRACTOR agrees to waive, and obtain endorsements from its workers' compensation insurer waiving, subrogation rights under its workers' compensation insurance policy against the CITY and to require each of its subcontractors, if any, to do likewise under their workers' compensation insurance policies.

(b) Liability Insurance Coverage.

CONTRACTOR shall obtain and maintain during the life of this Agreement the following insurance coverage:

(i) Commercial General Liability, including coverage for premises-operations, products/completed operations hazard, blanket contractual, broad form property damage, and independent contractors. In addition, CONTRACTOR shall obtain and maintain during the life of this Agreement each of the following insurance coverage which are not stricken out and initialed by the Project Manager: Explosion and collapse hazard, underground hazard, personal injury, and automobile liability, including owned, hired, and non-owned vehicles. All insurance coverage shall have limits of not less than $1,000,000.00 combined single limits, per occurrence and aggregate.

(ii) Below are approved endorsements which satisfy the basic insurance requirements contained in contracts entered into by City of Costa Mesa. These have been approved by the City Attorney's Office. The terms of any specific contract with the City are controlling. Prior to the commencement of any work, the City requires that the Engineer receive Certificates of Insurance in DUPLICATE for liability coverage of at least $1,000,000.00 combined single limits, per occurrence and in the aggregate. Endorsements to the policies providing the above insurance shall be obtained by CONTRACTOR, adding the following three provisions:

(1) Additional Insured:

"The City of Costa Mesa and its elected and appointed

SAMPLE

boards, officers, agents, and employees are additional insureds with respect to the subject project and agreement."

(2) Notice:

"Said policy shall not terminate, nor shall it be canceled nor the coverage reduced, until thirty (30) days after written notice is given to CITY."

(3) Other Insurance:

"Any other insurance maintained by the City of Costa Mesa shall be excess and not contributing with the insurance provided by this policy."

If any of such policies provide for a deductible or self-insured retention to provide such coverage, the amount of such deductible or self-insured retention shall be approved in advance by CITY. No policy of insurance issued as to which the CITY is an additional insured shall contain a provision which requires that no insured except the named insured can satisfy any such deductible or self-insured retention.

21. PROOF OF INSURANCE.

Prior to commencement of the Work, CONTRACTOR shall furnish CITY, through the Project Manager, proof of compliance with the above insurance requirements in a form satisfactory to the Risk Management.

22. LEGAL WORK DAY - PENALTIES FOR VIOLATION.

Eight (8) hours of labor shall constitute a legal day's work during any one (1) calendar day. CONTRACTOR shall forfeit to CITY the sum of Twenty-Five Dollars ($25.00) for each workman employed in the execution of this Agreement by CONTRACTOR or by any subcontractor for each calendar day during which such workman is required or permitted to work more than eight (8) hours in any one calendar day and 40 hours in any one calendar week in violation of California Labor Code Sections 1810 through 1815, inclusive.

SAMPLE

23. PREVAILING WAGE SCALE.

CONTRACTOR shall comply in all respects with the Davis-Bacon Act (40 U.S.C. section 276a) and with California Labor Code sections 1770 et seq., including the keeping of all records required by the provisions of Labor Code section 1776.

CONTRACTOR shall furnish each week to CITY's Project Administration Division a statement with respect to the wages of each of its employees during the preceding weekly payroll period.

24. COMPLIANCE WITH ALL LAWS.

CONTRACTOR shall, at its own cost and expense, comply with all applicable local, state, and federal laws, regulations, and requirements in the performance of this Agreement, including but not limited to laws regarding health and safety, labor and employment, and wage and hours.

25. DRUG-FREE WORKPLACE POLICY.

CONTRACTOR, upon notification of the award of this Agreement, shall establish a Drug-Free Awareness Program to inform employees of the dangers of drug abuse in the workplace, the penalties that may be imposed upon employees for drug abuse violations occurring in the workplace, and the employee assistance programs available to employees. Each employee engaged in the performance of a CITY contract must be notified of this Drug-Free Awareness Program, and must abide by its terms. CONTRACTOR shall conform to all the requirements of CITY's Policy No. 100-5, attached hereto as Attachment 1. Failure to establish a program, notify employees, or inform the CITY of a drug-related workplace conviction will constitute a material breach of contract and cause for immediate termination of the contract by the CITY.

26. NON–DISCRIMINATION.

In performing this Agreement, CONTRACTOR will not engage in, nor permit its

SAMPLE

agents to engage in, discrimination in employment of persons because of their race, religion, color, national origin, ancestry, physical handicap, medical condition, marital status or sex, or sexual orientation, except as permitted pursuant to Section 12940 of the Government Code. Violation of this provision may result in the imposition of penalties referred to in Section 1735 of the California Labor Code.

27. CONTRACT ASSURANCE.

The CONTRACTOR or subcontractor shall not discriminate on the basis of race, color, national origin, or sex in the performance of this Agreement. The CONTRACTOR shall carry out applicable requirements of 49 CFR part 26 in the award and administration of DOT-assisted contracts. Failure by the CONTRACTOR to carry out these requirements is a material breach of this Agreement, which may result in the termination of this Agreement or such other remedy as recipient deems appropriate.

The CONTRACTOR will require that the above provision is included in all subcontracts.

28. PROVISIONS CUMULATIVE.

The provisions of this Agreement are cumulative and in addition to, and not in limitation of, any other rights or remedies available to CITY.

29. NOTICES.

It shall be the duty and responsibility of CONTRACTOR to notify all tiers of subcontractors and material men of the following special notice provision; namely, all preliminary 20-day notices or stop notices shall be directed only to the City Clerk and to no other department, and shall be either personally delivered or sent by certified mail, postage prepaid.

All other notices shall be in writing and delivered in person or sent by certified mail, postage prepaid. Notices required to be given to CITY pursuant to this Agreement shall

SAMPLE

be addressed as follows:

City of Costa Mesa
77 Fair Drive
Costa Mesa, CA 92626
Attn: _____

Notices required to be given to CONTRACTOR shall be addressed as follows:
_____
_____
_____
Attn: _____

Notices required to be given to CONTRACTOR's sureties shall be addressed as follows:

_____
_____
_____
Attn: _____

30. INDEPENDENT CONTRACTOR.

The parties hereto acknowledge and agree that the relationship between CITY and CONTRACTOR is one of principal and independent contractor and no other. All personnel to be utilized by CONTRACTOR in the performance of this Agreement shall be employees of CONTRACTOR and not employees of the CITY. CONTRACTOR shall pay all salaries and wages, employer's social security taxes, unemployment insurance and similar taxes relating to employees and shall be responsible for all applicable withholding taxes. Nothing contained in this Agreement shall create or be construed as creating a partnership, joint venture, employment relations, or any other relationship except as set forth between the parties. The parties specifically acknowledge and agree that CONTRACTOR is not a partner with CITY, whether general or limited, and no activities of CITY or CONTRACTOR or statements made by CITY or CONTRACTOR shall be interpreted by any of the parties hereto as establishing any type of business relationship other than an independent contractor relationship.

SAMPLE

31. PERS ELIGIBILITY INDEMNIFICATION.

In the event that CONTRACTOR or any employee, agent, or subcontractor of CONTRACTOR providing services under this Agreement claims or is determined by a court of competent jurisdiction or the California Public Employees' Retirement System (PERS) to be eligible for enrollment in PERS as an employee of the CITY, CONTRACTOR shall indemnify, defend, and hold harmless CITY for the payment of any employee and/or employer contributions for PERS benefits on behalf of CONTRACTOR or its employees, agents, or subcontractors, as well as for the payment of any penalties and interest on such contributions, which would otherwise be the responsibility of CITY.

Notwithstanding any other agency, state or federal policy, rule, regulation, law or ordinance to the contrary, CONTRACTOR and any of its employees, agents, and subcontractors providing service under this Agreement shall not qualify for or become entitled to, and hereby agree to waive any claims to, any compensation, benefit, or any incident of employment by CITY, including but not limited to eligibility to enroll in PERS as an employee of CITY and entitlement to any contribution to be paid by CITY for employer contribution and/or employee contributions for PERS benefits.

32. VALIDITY.

The invalidity in whole or in part of any provision of this Agreement shall not void or affect the validity of any of the other provisions of this Agreement.

33. GOVERNING LAW.

This Agreement shall be governed by and construed in accordance with the laws of the State of California. Any legal action relating to or arising out of this Agreement shall be subject to the jurisdiction of the County of Orange, California.

34. NO THIRD PARTY BENEFICIARY RIGHTS.

This Agreement is entered into for the sole benefit of the CITY and CONTRACTOR

SAMPLE

and no other parties are intended to be direct or incidental beneficiaries of this Agreement and no third party shall have any right in, under or to this Agreement.

35. ASSIGNABILITY.

This Agreement may not be sold, transferred or assigned by either party, or by operation of law, to any other person or persons or business entity, without the other party's written permission. Any such sale, transfer or assignment, or attempted sale, transfer or assignment without written permission, may be deemed by the other party to constitute a voluntary termination of this Agreement and this Agreement shall thereafter be deemed terminated and void.

36. WAIVER.

No waiver of any provision of this Agreement shall be effective unless in writing and signed by a duly authorized representative of the party against whom enforcement of a waiver is sought referring expressly to this Paragraph. The waiver of any right or remedy in respect to any occurrence or event shall not be deemed a waiver of any right or remedy in respect to any other occurrence or event, nor shall any waiver constitute a continuing waiver.

37. HEADINGS.

Section and subsection headings are not to be considered part of this Agreement, are included solely for convenience, and are not intended to modify or explain or to be a full or accurate description of the content thereof.

38. COUNTERPARTS.

This Agreement may be executed in one or more counterparts by the parties hereto. All counterparts shall be construed together and shall constitute one Agreement.

39. CORPORATE AUTHORITY.

SAMPLE

The persons executing this Agreement on behalf of the Parties hereto warrant that they are duly authorized to execute this Agreement on behalf of said Parties and that by doing so, the Parties hereto are formally bound to the provisions of this Agreement.

40. ADDITIONAL SERVICES.

CONTRACTOR shall not receive compensation for any services provided outside the scope of the Contract Documents unless such additional services, including change orders, are approved in writing by CITY prior to CONTRACTOR performing the additional services.

It is specifically understood that oral requests or approvals of such additional services, change orders or additional compensation and any approvals from CITY shall be barred and are unenforceable.

[Signatures appear on following page.]

SAMPLE

IN WITNESS WHEREOF, the parties hereto have caused this Agreement to be executed by and through their respective authorized officers, as of the date first above written.

CITY OF COSTA MESA,
A municipal corporation

_____ Date: _____
Lori Ann Farrell Harrison
City Manager

CONTRACTOR

_____ Date: _____
Signature

_____
Name and Title

_____ Date: _____
Signature

_____
Name and Title

_____
Social Security or Taxpayer ID Number

ATTEST:

_____ Date: _____
Brenda Green
City Clerk

APPROVED AS TO FORM:

_____ Date: _____
Kimberly Hall Barlow
City Attorney

SAMPLE

APPROVED AS TO INSURANCE:

_____ Date: _____
Ruth Wang
Risk Management

APPROVED AS TO PURCHASING:

_____ Date: _____
Carol Molina
Acting Finance Director

DEPARTMENTAL APPROVAL:

_____ Date: _____
Raja Sethuraman
Public Services Director

_____ Date: _____
Baltazar Mejia, P.E.
Interim City Engineer

SAMPLE

2 – COUNCIL POLICY (SAMPLE)

CITY OF COSTA MESA, CALIFORNIA

COUNCIL POLICY

SUBJECT	POLICY NUMBER	EFFECTIVE DATE	PAGE
DRUG-FREE WORKPLACE	100-5	8-8-89	1 of 3

BACKGROUND

Under the Federal Drug-Free Workplace Act of 1988, passed as part of omnibus drug legislation enacted November 18, 1988, contractors and grantees of Federal funds must certify that they will provide drug-free workplaces. At the present time, the City of Costa Mesa, as a sub-grantee of Federal funds under a variety of programs, is required to abide by this Act. The City Council has expressed its support of the national effort to eradicate drug abuse through the creation of a Substance Abuse Committee, institution of a City-wide D.A.R.E. program in all local schools and other activities in support of a drug-free community. This policy is intended to extend that effort to contractors and grantees of the City of Costa Mesa in the elimination of dangerous drugs in the workplace.

PURPOSE

It is the purpose of this Policy to:

1. Clearly state the City of Costa Mesa's commitment to a drug-free society.
2. Set forth guidelines to ensure that public, private, and nonprofit organizations receiving funds from the City of Costa Mesa share the commitment to a drug-free workplace.

POLICY

The City Manager, under direction by the City Council, shall take the necessary steps to see that the following provisions are included in all contracts and agreements entered into by the City of Costa Mesa involving the disbursement of funds.

1. Contractor or Sub-grantee hereby certifies that it will provide a drug-free workplace by:

    A. Publishing a statement notifying employees that the unlawful manufacture, distribution, dispensing, possession, or use of a controlled substance is prohibited in Contractor's and/or sub-grantee's workplace, specifically the job site or location included in this contract, and specifying the actions that will be taken against the employees for violation of such prohibition;

    B. Establishing a Drug-Free Awareness Program to inform employees about:

        1. The dangers of drug abuse in the workplace;

CITY OF COSTA MESA, CALIFORNIA

COUNCIL POLICY

SUBJECT	POLICY NUMBER	EFFECTIVE DATE	PAGE
DRUG-FREE WORKPLACE	100-5	8-8-89	1 of 3

2. Contractor's and/or sub-grantee's policy of maintaining a drug-free workplace;

3. Any available drug counseling, rehabilitation and employee assistance programs; and

4. The penalties that may be imposed upon employees for drug abuse violations occurring in the workplace;

C. Making it a requirement that each employee to be engaged in the performance of the contract be given a copy of the statement required by subparagraph A;

D. Notifying the employee in the statement required by subparagraph 1 A that, as a condition of employment under the contract, the employee will:

1. Abide by the terms of the statement; and

2. Notify the employer of any criminal drug statute conviction for a violation occurring in the workplace no later than five (5) days after such conviction;

E. Notifying the City of Costa Mesa within ten (10) days after receiving notice under subparagraph 1 D 2 from an employee or otherwise receiving the actual notice of such conviction;

F. Taking one of the following actions within thirty (30) days of receiving notice under subparagraph 1 D 2 with respect to an employee who is so convicted:

1. Taking appropriate personnel action against such an employee, up to and including termination; or

2. Requiring such employee to participate satisfactorily in a drug abuse assistance or rehabilitation program approved for such purposes by a Federal, State, or local health agency, law enforcement, or other appropriate agency;

G. Making a good faith effort to maintain a drug-free workplace through implementation of subparagraphs 1 A through 1 F, inclusive.

2. Contractor and/or sub-grantee shall be deemed to be in violation of this Policy if the City of Costa Mesa determines that:

A. Contractor and/or sub-grantee has made a false certification under paragraph 1 above;

CITY OF COSTA MESA, CALIFORNIA

COUNCIL POLICY

SUBJECT	POLICY NUMBER	EFFECTIVE DATE	PAGE
DRUG-FREE WORKPLACE	100-5	8-8-89	1 of 3

B. Contractor and/or sub-grantee has violated the certification by failing to carry out the requirements of subparagraphs 1 A through 1 G above;

C. Such number of employees of Contractor and/or sub-grantee have been convicted of violations of criminal drug statutes for violations occurring in the workplace as to indicate that the contractor and/or sub-grantee has failed to make a good faith effort to provide a drug-free workplace.

3. Should any contractor and/or sub-grantee be deemed to be in violation of this Policy pursuant to the provisions of 2 A, B, and C, a suspension, termination or debarment proceeding subject to applicable Federal, State, and local laws shall be conducted. Upon issuance of any final decision under this section requiring debarment of a contractor and/or sub-grantee, the contractor and/or sub-grantee shall be ineligible for award of any contract, agreement or grant from the City of Costa Mesa for a period specified in the decision, not to exceed five (5) years. Upon issuance of any final decision recommending against debarment of the contractor and/or sub-grantee, the contractor and/or sub-grantee shall be eligible for compensation as provided by law.

3 – BONDS

Bond No. _____

LABOR AND MATERIALS PAYMENT BOND
TO ACCOMPANY CONTRACT PUBLIC WORK

WHEREAS, the City of Costa Mesa, State of California, has awarded to _____, hereinafter designated as the "Principal", a contract for the project known as: _____ in the City of Costa Mesa, in strict conformity with the contract on file with the Costa Mesa City Clerk, which is incorporated herein by this reference.

WHEREAS, Principal has executed or is about to execute the contract and the terms thereof and California Civil Code section 9554 require the furnishing of a bond, providing that if Principal or any of Principal's subcontractors fails to pay for any materials, provisions, or other supplies used in, upon, for, or about the performance of the work agreed to be done, or for any work or labor done thereon of any kind, the Surety on this bond will pay the same to the extent hereinafter set forth.

NOW, THEREFORE, We, the undersigned Principal, and _____, duly authorized to transact business under the laws of the State of California, as Surety (referred to herein as "Surety"), are held and firmly bound unto the City of Costa Mesa, in the sum of _____ Dollars ($_____) lawful money of the United States of America, said sum being equal to 100% of the estimated amount payable to the City of Costa Mesa under the terms of the contract, for which payment well and truly to be made, we bind ourselves, our heirs, executors, executors, and administrators, successors and assigns, jointly and severally, firmly by these present.

THE CONDITION OF THIS OBLIGATION IS SUCH, that, if the Principal or the Principal's subcontractors fail to pay for any materials, provisions, or other supplies, implements or machinery used in, upon, for, or about the performance of the work contracted to be done, or for any other work or labor thereon of any kind, or for amounts due under the Unemployment Insurance Code with respect to such work or labor, or for any amounts required to be deducted, withheld and paid over to the Employment Development Department from the wages of employees of the Principal and subcontractors pursuant to Section 13020 of the Unemployment Insurance Code with respect to such work and labor, then the Surety will pay for the same, in an amount not exceeding the sum specified in this Bond, and also, in case suit is brought to enforce the obligations of this Bond, a reasonable attorneys' fees, to be fixed by the Court as required by the provisions of Section 9554 of the California Civil Code.

This bond shall inure to the benefit of any and all persons, companies and corporations entitled to file claims under Section 9100 of the California Civil Code, so as to give a right of action to them or their assigns in any suit brought upon this bond. And the Surety, for value received, hereby stipulates and agrees that no change, extension of time, alteration or addition to the terms of the contract or to the work to be performed thereunder or the specifications accompanying the same shall in any way affect its obligations on this Bond, and it does hereby waive notice of any such change, extension of time, alteration or addition to the terms of the contract or to the work or to the specifications.

IN WITNESS WHEREOF, this instrument has been duly executed by the above-named Principal and Surety, on the _____ day of _____, 20____.

_____	_____
Name of Contractor (Principal)	Authorized Signature/Title
_____	_____
Name of Surety	Authorized Agent Signature
_____	_____
Address of Surety	Print Name and Title

Bond Number _____

FAITHFUL PERFORMANCE BOND
PUBLIC WORK

(The premium charge on this bond is $ _____ , being at the rate of $ _____ per thousand of the contract price)

KNOW ALL MEN BY THESE PRESENTS:

THAT, WHEREAS the CITY OF COSTA MESA, 77 Fair Drive, Costa Mesa, California 92626, has entered into a contract dated _____, 20 _____ , which is hereby incorporated by reference herein, with _____ hereinafter designated as the "Principal," for the work described as follows:

_____

_____

_____ ; and

WHEREAS, said Principal is required by the terms of said contract to furnish a bond for the faithful performance of said contract.

NOW, THEREFORE, We the Principal, and _____ a corporation organized and existing under the laws of the State of _____ and duly authorized to transact business under the laws of the State of California, as Surety, are held and firmly bound unto the CITY OF COSTA MESA in the penal sum of _____ _____ Dollars ($ _____), lawful money of the United States, for the payment of which sum well and truly to be made, we bind ourselves, our heirs, executors, administrators, and successors, jointly and severally, firmly by these presents.

The Condition Of This Obligation Is Such, That, if the above bounden Principal, his or its heirs, executors, administrators, successors or assigns, shall in all things stand to and abide by, and well and truly keep and perform the covenants, condition and agreements in the said contract and any alteration thereof made as therein provided, or his or their part, to be kept and performed at the time and in the manner therein specified, and in all respects according to their true intent and meaning, and shall indemnify and save harmless the CITY OF COSTA MESA, its officers and agents, as therein stipulated, then this obligation shall become null and void; otherwise it shall be and remain in full force and virtue.

And the said Surety, for value received, hereby stipulates and agrees that no change, extension of time, alteration or addition to the terms of the contract or to the work to be performed thereunder or the specifications accompanying the same shall in any wise affect its obligations on this bond, and it does hereby waive notice of any such change, extension of time, alteration or addition to the terms of the contract or the work or to the specifications.

IN WITNESS WHEREOF, We have hereunto set our hands and seals this _____ day of _____, 20

_____

_____

_____

_____

4 – INSURANCE (SAMPLE)

INSURANCE REQUIREMENT FOR CITY OF COSTA MESA

CONTRACTOR shall not commence Work under this Agreement until he has obtained all insurance required under this section and CITY has approved the insurance as to form, amount, and carrier, nor shall CONTRACTOR allow any subcontractor to commence any Work until all similar insurance required of the subcontractor has been obtained and approved.

Neither the failure of CONTRACTOR to supply specified insurance policies and coverage, nor the failure of CITY to approve same shall alter or invalidate the provisions of Paragraph 18 of this Agreement.

A. Workers' Compensation Insurance.

CONTRACTOR shall obtain and maintain during the life of this Agreement workers' compensation insurance and, if any Work is sublet, CONTRACTOR shall require all tiers of subcontractors to obtain workers' compensation insurance.

All workers' compensation insurance policies shall provide that the insurance may not be canceled without thirty (30) days' advance written notice of such cancellation to CITY.

CONTRACTOR agrees to waive, and obtain endorsements from its workers' compensation insurer waiving, subrogation rights under its workers' compensation insurance policy against the CITY and to require each of its subcontractors, if any, to do likewise under their workers' compensation insurance policies.

B. Liability Insurance Coverage.

CONTRACTOR shall obtain and maintain during the life of this Agreement the following insurance coverage:

(1) Commercial General Liability, including coverage for premises-operations, products/completed operations hazard, blanket contractual, broad form property damage, and independent contractors. In addition, CONTRACTOR shall obtain and maintain during the life of this Agreement each of the following insurance coverage which are not stricken out and initialed by the Project Manager: Explosion and collapse hazard, underground hazard, personal injury, and automobile liability, including owned, hired, and non-owned vehicles. All insurance coverage shall have limits of not less than $1,000,000.00 combined single limit, per occurrence and aggregate.

(2) Below are approved endorsements which satisfy the basic insurance requirements contained in contracts entered into by City of Costa Mesa. These have been approved by the City Attorney's office. The terms of any specific contract with the City are controlling. Prior to the commencement of any work, the City requires that the Engineer receive Certificates of Insurance in DUPLICATE for liability coverage of at lease $1,000,000 combined single limit, per occurrence and in the aggregate. Endorsements to the policies providing the above insurance shall be obtained by CONTRACTOR, adding the following three provisions:

(i) Additional Insured:

The City of Costa Mesa and their elected and appointed boards, officers, agents, employees, are additional insureds with respect to the subject project and agreement.

(ii) Notice:

"Said policy shall not terminate, nor shall it be canceled nor the coverage reduced, until thirty (30) days after written notice is given to CITY."

(iii) Other Insurance:

"Any other insurance maintained by the City of Costa Mesa shall be excess and not contributing with the insurance provided by this policy."

If any of such policies provide for a deductible or self-insured retention to provide such coverage, the amount of such deductible or self-insured retention shall be approved in advance by City. No policy of insurance issued as to which the City is an additional insured shall contain a provision which requires that no insured except the named insured can satisfy any such deductible or self-insured retention.

CERTIFICATE OF LIABILITY INSURANCE

DATE (MM/DD/YYYY)

THIS CERTIFICATE IS ISSUED AS A MATTER OF INFORMATION ONLY AND CONFERS NO RIGHTS UPON THE CERTIFICATE HOLDER. THIS CERTIFICATE DOES NOT AFFIRMATIVELY OR NEGATIVELY AMEND, EXTEND OR ALTER THE COVERAGE AFFORDED BY THE POLICIES BELOW. THIS CERTIFICATE OF INSURANCE DOES NOT CONSTITUTE A CONTRACT BETWEEN THE ISSUING INSURER(S), AUTHORIZED REPRESENTATIVE OR PRODUCER, AND THE CERTIFICATE HOLDER.

IMPORTANT: If the certificate holder is an ADDITIONAL INSURED, the policy(ies) must be endorsed. If SUBROGATION IS WAIVED, subject to the terms and conditions of the policy, certain policies may require an endorsement. A statement on this certificate does not confer rights to the certificate holder in lieu of such endorsement(s).

PRODUCER	CONTACT NAME:
	PHONE (A/C, No, Ext): / FAX (A/C, No):
	E-MAIL ADDRESS:
	INSURER(S) AFFORDING COVERAGE / NAIC #
INSURED	INSURER A:
	INSURER B:
	INSURER C:
	INSURER D:
	INSURER E:
	INSURER F:

COVERAGES **CERTIFICATE NUMBER:** **REVISION NUMBER:**

THIS IS TO CERTIFY THAT THE POLICIES OF INSURANCE LISTED BELOW HAVE BEEN ISSUED TO THE INSURED NAMED ABOVE FOR THE POLICY PERIOD INDICATED. NOTWITHSTANDING ANY REQUIREMENT, TERM OR CONDITION OF ANY CONTRACT OR OTHER DOCUMENT WITH RESPECT TO WHICH THIS CERTIFICATE MAY BE ISSUED OR MAY PERTAIN, THE INSURANCE AFFORDED BY THE POLICIES DESCRIBED HEREIN IS SUBJECT TO ALL THE TERMS, EXCLUSIONS AND CONDITIONS OF SUCH POLICIES. LIMITS SHOWN MAY HAVE BEEN REDUCED BY PAID CLAIMS.

INSR LTR	TYPE OF INSURANCE	ADDL INSD	SUBR WVD	POLICY NUMBER	POLICY EFF (MM/DD/YYYY)	POLICY EXP (MM/DD/YYYY)	LIMITS	
	COMMERCIAL GENERAL LIABILITY						EACH OCCURRENCE	$
	CLAIMS-MADE / OCCUR						DAMAGE TO RENTED PREMISES (Ea occurrence)	$
							MED EXP (Any one person)	$
							PERSONAL & ADV INJURY	$
	GEN'L AGGREGATE LIMIT APPLIES PER:						GENERAL AGGREGATE	$
	POLICY / PRO-JECT / LOC						PRODUCTS - COMP/OP AGG	$
	OTHER:							$
	AUTOMOBILE LIABILITY						COMBINED SINGLE LIMIT (Ea accident)	$
	ANY AUTO						BODILY INJURY (Per person)	$
	ALL OWNED AUTOS / SCHEDULED AUTOS						BODILY INJURY (Per accident)	$
	HIRED AUTOS / NON-OWNED AUTOS						PROPERTY DAMAGE (Per accident)	$
								$
	UMBRELLA LIAB / OCCUR						EACH OCCURRENCE	$
	EXCESS LIAB / CLAIMS-MADE						AGGREGATE	$
	DED / RETENTION $							$
	WORKERS COMPENSATION AND EMPLOYERS' LIABILITY						PER STATUTE / OTH-ER	
	ANY PROPRIETOR/PARTNER/EXECUTIVE OFFICER/MEMBER EXCLUDED? Y / N (Mandatory in NH)	N / A					E.L. EACH ACCIDENT	$
	If yes, describe under DESCRIPTION OF OPERATIONS below						E.L. DISEASE - EA EMPLOYEE	$
							E.L. DISEASE - POLICY LIMIT	$

DESCRIPTION OF OPERATIONS / LOCATIONS / VEHICLES (ACORD 101, Additional Remarks Schedule, may be attached if more space is required)

CERTIFICATE HOLDER

CANCELLATION

SHOULD ANY OF THE ABOVE DESCRIBED POLICIES BE CANCELLED BEFORE THE EXPIRATION DATE THEREOF, NOTICE WILL BE DELIVERED IN ACCORDANCE WITH THE POLICY PROVISIONS.

AUTHORIZED REPRESENTATIVE

SAMPLE

© 1988-2014 ACORD CORPORATION. All rights reserved.

The ACORD name and logo are registered marks of ACORD

POLICY NUMBER: Enter General Liability Policy Numbe

COMMERCIAL GENERAL LIABILITY
CG 20 37 07 04

THIS ENDORSEMENT CHANGES THE POLICY. PLEASE READ IT CAREFULLY.

ADDITIONAL INSURED – OWNERS, LESSEES OR CONTRACTORS – COMPLETED OPERATIONS

This endorsement modifies insurance provided under the following:

COMMERCIAL GENERAL LIABILITY COVERAGE PART

SCHEDULE

Name Of Additional Insured Person(s) Or Organization(s):	Location And Description Of Completed Operations
Information required to complete this Sched ot above, will be shown in the Declarations.	

Section II – Who Is An Insured mended
include as an additional insured th s) or
organization(s) shown in the Schedule with
respect to liability for "bodily in ury" or perty dam-
age" caused, in whole or b work" at
the location designated a in the sched-
ule of this endorsement that additional
insured and included in th ducts-completed
operations hazard".

SAMPLE

© ISO Properties, Inc., 2004

THIS ENDORSEMENT CHANGES THE POLICY. PLEASE READ IT CAREFULLY.

ADDITIONAL INSURED – OWNERS, LESSEES OR CONTRACTORS – SCHEDULED PERSON OR ORGANIZATION

This endorsement modifies insurance provided under the following:

COMMERCIAL GENERAL LIABILITY COVERAGE PART

SCHEDULE

Name Of Additional Insured Person(s) Or Organization(s):	Location(s) Of Covered Operations
Information required to complete this Schedule, if not shown above, will be shown in the Declarations.	

A. Section II – Who Is An Insured is amended to include as an additional insured the person(s) or organization(s) shown in the Schedule, but only with respect to liability for "bodily injury", "property damage" or "personal and advertising injury" caused, in whole or in part, by:

1. Your acts or omissions; or
2. The acts or omissions of those acting on your behalf;

in the performance of your ongoing operations for the additional insured(s) at the location(s) designated above.

B. With respect to the insurance afforded to these additional insureds, the following additional exclusions apply:

This insurance does not apply to "bodily injury" or "property damage" occurring after:

1. All work, including materials, parts or equipment furnished in connection with such work, on the project (other than service, maintenance or repairs) to be performed by or on behalf of the additional insured(s) at the location of the covered operations has been completed; or
2. That portion of "your work" out of which the injury or damage arises has been put to its intended use by any person or organization other than another contractor or subcontractor engaged in performing operations for a principal as a part of the same project.

SAMPLE

© ISO Properties, Inc., 2004

WAIVER OF TRANSFER OF RIGHTS OF RECOVERY AGAINST OTHERS TO US

This endorsement modifies insurance provided under the following:

COMMERCIAL GENERAL LIABILITY COVERAGE PART
PRODUCTS/COMPLETED OPERATIONS LIABILITY COVERAGE PART

SCHEDULE

Name Of Person Or Organization: ANY PERSON OR ORGRANIZATION FROM WHOM YOU ARE REQUIRED BY WRITTEN CONTRACT OR AGREEMENT TO OBTAIN THIS WAIVER OF RIGHTS FROM US.
Information required to complete this Schedule, if not shown above, will be sh in Declarations.

The following is added to Paragraph 8. Transfer Of Rights Of Recovery Against Others To Us of Section IV – Conditions:

We waive any right of recovery we may have against the person or organization shown in the Schedule above because of payments we make for injury or damage arising out of your ongoing operations or "your work" done under a contract with that perso or organization and included in the "p roducts-completed operations hazard". This waiver applies only to the person or organization shown in the Schedule above

SAMPLE

© Insurance Services Office, Inc., 2008

WAIVER OF OUR RIGHT TO RECOVER FROM OTHERS ENDORSEMENT - CALIFORNIA

We have the right to recover our payments from anyone liable for an injury covered by this policy. We will not enforce our right against the person or organization named in the Schedule. (This agreement applies only to the extent that you perform work under a written contract that requires you to obtain this agreement from us.)

You must maintain payroll records accurately segregating the remuneration of your employees while engaged in the work described in the Schedule.

The additional premium for this endorsement shall be 2% of the California workers' compensation premium otherwise due on such remuneration.

SCHEDULE

PERSON OR ORGANIZATION	JOB DESCRIPTION
ANY PERSON OR ORGANIZATION FOR WHOM THE NAMED INSURED HAS AGREED BY WRITTEN CONTRACT TO FURNISH THIS WAIVER	BLANKET WAIVER OF SUBROGATION

SAMPLE

This endorsement changes the policy to which it is attached and is effective on the date issued unless otherwise stated.
(The information below is required only when this endorsement is issued subsequent to preparation of the policy.)

Endorsement Effective: XX/XX/2014 Policy No. ENTER Endorsement No. 001

Insured: Contractors Name

Premium $ INCL.

Insurance Company: **Insurance Company**

Countersigned By: _____

- 1998 by the Workers' Compensation Insurance Rating Bureau of California All rights reserved.
From the WCIRB's California Workers' Compensation Insurance Forms Manual - 1999.

5 – PERMIT APPLICATION

City of Costa Mesa, Department of Public Services

Application and Permit for Work Described Below

PERMIT NO. _____

VENDOR NO. _____

Address or Location of Work _____ Date _____

Type of Work to be Done _____

Start Date _____ Permit Not Valid After _____ (Expiration Date) Plan No. _____

Contractor's Name _____ Address _____

Telephone No. (Day) _____ (Night) _____ City and State _____

State License No./Class _____ City Business License No. _____

Applicant's Name _____ Address _____

Telephone No. _____ Developer's Name _____ Telephone No. _____

Name of Insurance Co. _____ Insurance Cert. No.(s) _____

24-Hour Emergency Contact _____ Telephone No. _____

FEES	48 HOURS MINIMUM REQUIRED FOR PROCESSING PERMIT	PERMIT APPROVED FOR CITY ENGINEER
Bond $ _____		By _____
Cash Deposit $ _____		Date _____
Issuance $ _____		
Inspection $ _____	Account # _____	Underground Service Alert ID No. _____
TOTAL $ _____		

Permittee shall contact the City Inspector's office (**754-5025**) at least 24 hours prior to commencing any work. Failure to obtain proper inspections prior to commencement of work may be cause for its rejection. **THIS PERMIT WITH APPROVED PLANS MUST BE ON THE JOB AND AVAILABLE TO CITY REPRESENTATIVES AT ALL TIMES**. You are guided by Municipal Code Sections 1-33, 15 -25-,15-27, 15-27.1, 15-39 and 15-48.

THE UNDERSIGNED PERMITTEE HEREBY CERTIFIES:

1. **That all work shall be performed in accordance with the Standard Specifications for Public Works Construction** (latest edition); Standard Drawings of the City of Costa Mesa; special agency provisions; and all applicable laws and ordinances.
2. Control of traffic shall conform to the **Work Area Traffic Control Handbook** (W.A.T.C.H.) (latest edition). The permittee shall furnish and/or install all signs, lights, barricades, traffic control or warning devices, flagmen and flashing arrow board. The permittee shall obtain approval of the Transportation Services Engineer for all street closures, detours, turn restrictions, parking prohibitions and methods of accommodating traffic. The permittee shall notify Emergency, Fire and Police services and residents or businesses twenty-four (24) hours in advance of any access limitation or traffic restrictions.
3. That a maximum of _____ lane(s) may be closed if necessary to perform work within the public right of way during the hours of **8:30 a.m. - 3:30 p.m. Monday through Friday** as long as traffic can be maintained in each direction with flagmen unless otherwise approved by the Transportation Services Engineer.
4. That throughout all phases of construction the work site shall be kept clean and free of rubbish, debris and dust and drainage shall be maintained.

SUBJECT TO THE NOTES BELOW: (Inspection fees over the basic inspection time will be billed at the approved hourly rate.)

1. City will provide inspection between 7:30 a.m. and 3:00 p.m., Monday through Friday (except on City observed holidays).
2. Prior to placing Portland Cement Concrete or Asphalt Concrete (A.C.), the following will have been inspected and approved; native ☐ and imported ☐.
3. **Curb and gutter shall not be removed on the day prior to a weekend or a City observed holiday.**
4. Fill in areas left by curb and gutter removal flush with the adjacent pavement on the same day that removal occurs.
5. Bore under all streets, curbs and gutters, sidewalks, cross-gutters and driveway approaches. Tunneling is not allowed.
6. Open excavations must be backfilled or plated with spikes and A.C. tacked around edges during non-working hours.
7. Sidewalk shall be constructed per City of Costa Mesa Standard Drawing No. _____.
8. Driveway approach shall be constructed per City of Costa Mesa Standard Drawing No. _____.
9. No traffic allowed on concrete for minimum of seven days for curing. See traffic control above.
10. Trench compaction and resurfacing shall conform to City of Costa Mesa Standard Drawing No. 813.
11. Trenches exceeding five (5) feet in depth require a permit from the Division of Industrial Safety, State of California.
12. Permittee shall pay for all S.E., compaction and materials tests deemed necessary by the City.
13. All trenches shall be permanently patched within ten (10) days of completion of work below subgrade.
14. Permittee shall provides the City with record drawings of permitted work before final inspection by the City.
15. Permittee understands and agrees to the hold-harmless agreement required by CMMC Section 15-27 and printed on the reverse of this application.
16. Other: _____

NOTICE: Contractor must notify the following Utility Companies two working days before starting work:

Costa Mesa Sanitary District	Mesa Consolidated Water District	UNDERGROUND SERVICE ALERT
(714) 631-1731	714) 631-1200	Toll Free - 1-800-422-4133; After Hours & Holidays - (714) 739-3031; (213) 621-3111

INSPECTION RECORD	Inspector of Records
Date	

CERTIFICATE OF INSPECTION

I hereby certify that the street work allowed by this permit has been constructed according to the plans and specifications and I hereby accept the work in this manner.

By: _____
Inspector

_____
Date

0183-62 mw, rev. 2/03
White - Inspectors;
Canary - Engineering;
Pink - Finance
Goldenrod - Applicant

I certify I have read and understand all of the above and that all statements made are correct and complete.

Applicant's Signature _____ Date _____

3 COPIES OF SKETCHES OR PLANS ARE REQUIRED PRIOR TO PERMIT ISSUANCE

THIS APPLICATION BECOMES A PERMIT WHEN APPROVED AND VALIDATED

6 – APPLICATION FOR BUSINESS LICENSE

CITY OF COSTA MESA

77 Fair Dr • Costa Mesa, CA 92626
P.O.Box 1200 • Costa Mesa, CA 92628-1200
Phone: (714) 754-5234 • Fax: (714) 754-5149 • www.costamesaca.gov

BUSINESS LICENSE TAX APPLICATION

- FOR OFFICE USE ONLY -

Business License No. _____

FEE MUST ACCOMPANY APPLICATION

• Please Check One •

- New Application ☐
- Change of Owner ☐
- Change of Ownership Type ☐
- Change of Business Name ☐
- Home Occupation ☐

Business Name/DBA _____

Corporate Name (if applicable) _____

Business Location _____
(Cannot be Mail Box per State of California Business & Professions Code-Section 17538.5)

City _____ **State** _____ **Zip** _____ **Website** _____

Mailing Address _____ **Email Address** _____

City _____ **State** _____ **Zip** _____ **No. of Employees** _____ **No. of Rental Units** _____

Business Phone _____ **Hours of Operation:** _____

Costa Mesa Start Date	Description of Business:

Ownership ☐ Corporation ☐ LLC ☐ Partnership ☐ Sole Proprietor ☐ LLP

Resale No. _____ **FEIN / SSN** _____ **ITIN/Other ID No.** _____ **State ID No.** _____

Contractor CA State License No. _____ **State Lic. Type / Class** _____ **Expire Date** _____

Enter below names of Owners, Partners, or Corporate Officers

Per AB 2184, you may protect your residential address by providing a different Service of Process address in accordance with Sections 16000 1(a)(2) and 16100 1(a)(2) of the Business and Professions Code. To do so, please fill out the section on the bottom of this form.

1st Owner Name _____ **Title** _____

Home Address *(Cannot be Mail Box)* _____
(Street, City, Zip Code)

Phone No. _____ **Date of Birth** _____ **Driver's License #** _____

2nd Owner Name _____ **Title** _____

Home Address *(Cannot be Mail Box)* _____
(Street, City, Zip Code)

Phone No. _____ Date of Birth _____ **Driver's License #** _____

FEE CALCULATION - PLEASE SEE REVERSE FOR FEE CALCULATION AND ENTER BELOW

Tax Calculated From Reverse	$
CASp Fee	$ 4.00
Total	$

Please return entire form with check payable to City of Costa Mesa.

Thank you for doing business in the City of Costa Mesa!

Your Business License Tax Certificate will be issued under the provisions of the Municipal Code Section 9-1. You are cautioned that this License does not permit operation of a business in violation of other Municipal Code Sections.

Authorization to conduct business is not granted until issuance of the License.

I declare, under penalty of perjury, that to the best of my knowledge and belief, the statements made herein are correct and true and that acceptance of payment does not constitute approval of the Business License.

Signature _____ Title _____ Date _____

Planning Approval _____ Date Approved _____ CUP? _____

SERVICE OF PROCESS ADDRESS, PURSUANT TO AB2184 - AVAILABLE FOR PUBLIC INSPECTION

If you wish to protect your residential address with a different service of process address, please provide it here.
NOTE - if your service of process address is a post office box or private mailbox, it must comply with paragraph(2) of subdivision (b) of Section 17538.5 of the California Business and Professions Code.

Service of Process Address _____

Residential Address to protect ☐ Business Location ☐ Mailing Address ☐ Owner/Partner/Officer Address

FEE CALCULATION • PLEASE SEE REVERSE

CITY OF COSTA MESA

BUSINESS TYPE - PLEASE SELECT ONE AND ENTER ON FIRST PAGE OF APPLICATION

BUSINESS NAME _____

GENERAL BUSINESS

(RETAIL, WHOLESALE, SERVICE, ETC.)

ESTIMATED ANNUAL GROSS RECEIPTS _____
And circle the corresponding category below

$	TO	$ 1,000.00	$ 0.00
$ 1,000.01	TO	$ 25,000.00	$ 25.00
$ 25,000.01	TO	$ 40,000.00	$ 35.00
$ 40,000.01	TO	$ 75,000.00	$ 45.00
$ 75,000.01	TO	$ 200,000.00	$ 60.00
$200,000.01	TO	$ 500,000.00	$100.00
	OVER	$ 500,000.00	$200.00

PLUS California State CASp Fee (see below)

ADMINISTRATIVE OFFICE / WAREHOUSES

(Fees based on annual operating expense ONLY when no gross receipts are generated)

ESTIMATED ANNUAL EXPENSES _____
And circle the corresponding category below

$	TO	$ 1,000.00	$ 0.00
$ 1,000.01	TO	$ 25,000.00	$ 25.00
$ 25,000.01	TO	$ 40,000.00	$ 35.00
$ 40,000.01	TO	$ 75,000.00	$ 45.00
$ 75,000.01	TO	$ 200,000.00	$ 60.00
$200,000.01	TO	$ 500,000.00	$100.00
	OVER	$ 500,000.00	$200.00

PLUS California State CASp Fee (see below)

SHOW / EXHIBITION / SWAP MEET

PROMOTER'S ANNUAL GROSS RECEIPTS $_____

PLUS # OF SELLERS @ $5.00 EACH
EQUALS TOTAL TAX DUE $_____

PLUS California State CASp Fee (see below)

CALIFORNIA LICENSED CONTRACTOR

$50.00

PLUS California State CASp Fee (see below)

TAXI CABS

$50.00

PLUS California State CASp Fee (see below)

VEHICLE WHEEL, TOW TRUCK, BUS

$25.00 PER VEHICLE $_____

PLUS California State CASp Fee (see below)

TAX EXEMPT ORGANIZATION

PLEASE ATTACH PROOF OF EXEMPTION

State Mandated Fee:

*On September 19, 2012 Governor Brown signed into law SB-1186 which adds a state fee on any applicant for a local business license or similar instrument or permit, or renewal thereof. The purpose is to increase disability access and compliance with construction-related accessibility requirements and to develop educational resources for businesses in order to facilitate compliance with federal and state disability laws, as specified. As of January 1, 2018, AB 1379 increases this fee to $4.

Under federal and state law, compliance with disability access laws is a serious and significant responsibility that applies to all California building owners and tenants with buildings open to the public. You may obtain information about your legal obligations and how to comply with disability access laws at the following agencies:

The Division of the State Architect at www.dgs.ca.gov/dsa
The Department of Rehabilitation at www.dor.ca.gov
The California Commission on Disability Access at www.ccda.ca.gov

SB 205: NPDES Storm Water Permit Requirements

Are you a business that is a regulated industry with storm water discharge requirements in accordance with the SB205 NPDES permit program? If so, please provide the SIC # and Permit # below.

SIC # _____ NPDES Permit # _____

7 – W-9 REQUEST FOR TAXPAYER I.D. NUMBER & CERTIFICATION

Form **W-9**
(Rev. December 2014)
Department of the Treasury
Internal Revenue Service

Request for Taxpayer Identification Number and Certification

Give Form to the requester. Do not send to the IRS.

Print or type
See Specific Instructions on page 2

1 Name (as on your income tax return). Name is required on this line; do not leave this line blank.

2 Business name/disregarded entity name, if different from above

3 Check appropriate box for federal tax classification: check only one of the following seven boxes:
☐ Individual/sole proprietor or single-member LLC ☐ C Corporation ☐ S Corporation ☐ Partnership ☐ Trust/estate
☐ Limited liability company. Enter the tax classification (C=C corporation, S=S corporation, P=partnership) ▶
Note. For a single-member LLC that is disregarded, do not check LLC; check the appropriate box in the line above for the tax classification of the single-member owner.
☐ Other (see instructions) ▶

4 Exemptions (codes apply only to certain entities, not individuals; see instructions on page 3):
Exempt payee code (if any)
Exemption from FATCA reporting code (if any)
(Applies to accounts maintained outside the U.S.)

5 Address (number, street, and apt. or suite no.)

Requester's name and address (optional)

6 City, state, and ZIP code

7 List account number(s) here (optional)

Part I Taxpayer Identification Number (TIN)

Enter your TIN in the appropriate box. The TIN provided must match the name given on line 1 to avoid backup withholding. For individuals, this is generally your social security number (SSN). However, for a resident alien, sole proprietor, or disregarded entity, see the Part I instructions on page 3. For other entities, it is your employer identification number (EIN). If you do not have a number, see *How to get a TIN* on page 3.

Note. If the account is in more than one name, see the instructions for line 1 and the chart on page 4 for guidelines on whose number to enter.

Social security number
☐☐☐ – ☐☐ – ☐☐☐☐

or

Employer identification number
☐☐ – ☐☐☐☐☐☐☐

Part II Certification

Under penalties of perjury, I certify that:

1. **The number shown on this form is my correct taxpayer identification number (or I am waiting for a number to be issued to me); and**
2. **I am not subject to backup withholding because: (a) I am exempt from backup withholding, or (b) I have not been notified by the Internal Revenue Service (IRS) that I am subject to backup withholding as a result of a failure to report all interest or dividends, or (c) the IRS has notified me that I am no longer subject to backup withholding; and**
3. **I am a U.S. citizen or other U.S. person (defined below); and**
4. **The FATCA code(s) entered on this form (if any) indicating that I am exempt from FATCA reporting is correct.**

Certification instructions. You must cross out item 2 above if you have been notified by the IRS that you are currently subject to backup withholding because you have failed to report all interest and dividends on your tax return. For real estate transactions, item 2 does not apply. For mortgage interest paid, acquisition or abandonment of secured property, cancellation of debt, contributions to an individual retirement arrangement (IRA), and generally, payments other than interest and dividends, you are not required to sign the certification, but you must provide your correct TIN. See the instructions on page 3.

Sign Here | **Signature of U.S. person ▶** | **Date ▶**

General Instructions

Section references are to the Internal Revenue Code unless otherwise noted.

Future developments. Information about developments affecting Form W-9 (such as legislation enacted after we release it) is at *www.irs.gov/fw9*.

Purpose of Form

An individual or entity (Form W-9 requester) who is required to file an information return with the IRS must obtain your correct taxpayer identification number (TIN) which may be your social security number (SSN), individual taxpayer identification number (ITIN), adoption taxpayer identification number (ATIN), or employer identification number (EIN), to report on an information return the amount paid to you, or other amount reportable on an information return. Examples of information returns include, but are not limited to, the following:

- Form 1099-INT (interest earned or paid)
- Form 1099-DIV (dividends, including those from stocks or mutual funds)
- Form 1099-MISC (various types of income, prizes, awards, or gross proceeds)
- Form 1099-B (stock or mutual fund sales and certain other transactions by brokers)
- Form 1099-S (proceeds from real estate transactions)
- Form 1099-K (merchant card and third party network transactions)
- Form 1098 (home mortgage interest), 1098-E (student loan interest), 1098-T (tuition)
- Form 1099-C (canceled debt)
- Form 1099-A (acquisition or abandonment of secured property)

Use Form W-9 only if you are a U.S. person (including a resident alien), to provide your correct TIN.

If you do not return Form W-9 to the requester with a TIN, you might be subject to backup withholding. See What is backup withholding? on page 2.

By signing the filled-out form, you:

1. Certify that the TIN you are giving is correct (or you are waiting for a number to be issued),
2. Certify that you are not subject to backup withholding, or
3. Claim exemption from backup withholding if you are a U.S. exempt payee. If applicable, you are also certifying that as a U.S. person, your allocable share of any partnership income from a U.S. trade or business is not subject to the withholding tax on foreign partners' share of effectively connected income, and
4. Certify that FATCA code(s) entered on this form (if any) indicating that you are exempt from the FATCA reporting, is correct. See *What is FATCA reporting?* on page 2 for further information.

Note. If you are a U.S. person and a requester gives you a form other than Form W-9 to request your TIN, you must use the requester's form if it is substantially similar to this Form W-9.

Definition of a U.S. person. For federal tax purposes, you are considered a U.S. person if you are:

- An individual who is a U.S. citizen or U.S. resident alien;
- A partnership, corporation, company, or association created or organized in the United States or under the laws of the United States;
- An estate (other than a foreign estate); or
- A domestic trust (as defined in Regulations section 301.7701-7).

Special rules for partnerships. Partnerships that conduct a trade or business in the United States are generally required to pay a withholding tax under section 1446 on any foreign partners' share of effectively connected taxable income from such business. Further, in certain cases where a Form W-9 has not been received, the rules under section 1446 require a partnership to presume that a partner is a foreign person, and pay the section 1446 withholding tax. Therefore, if you are a U.S. person that is a partner in a partnership conducting a trade or business in the United States, provide Form W-9 to the partnership to establish your U.S. status and avoid section 1446 withholding on your share of partnership income.

In the cases below, the following person must give Form W-9 to the partnership for purposes of establishing its U.S. status and avoiding withholding on its allocable share of net income from the partnership conducting a trade or business in the United States:

- In the case of a disregarded entity with a U.S. owner, the U.S. owner of the disregarded entity and not the entity;
- In the case of a grantor trust with a U.S. grantor or other U.S. owner, generally, the U.S. grantor or other U.S. owner of the grantor trust and not the trust; and
- In the case of a U.S. trust (other than a grantor trust), the U.S. trust (other than a grantor trust) and not the beneficiaries of the trust.

Foreign person. If you are a foreign person or the U.S. branch of a foreign bank that has elected to be treated as a U.S. person, do not use Form W-9. Instead, use the appropriate Form W-8 or Form 8233 (see Publication 515, Withholding of Tax on Nonresident Aliens and Foreign Entities).

Nonresident alien who becomes a resident alien. Generally, only a nonresident alien individual may use the terms of a tax treaty to reduce or eliminate U.S. tax on certain types of income. However, most tax treaties contain a provision known as a "saving clause." Exceptions specified in the saving clause may permit an exemption from tax to continue for certain types of income even after the payee has otherwise become a U.S. resident alien for tax purposes.

If you are a U.S. resident alien who is relying on an exception contained in the saving clause of a tax treaty to claim an exemption from U.S. tax on certain types of income, you must attach a statement to Form W-9 that specifies the following five items:

1. The treaty country. Generally, this must be the same treaty under which you claimed exemption from tax as a nonresident alien.
2. The treaty article addressing the income.
3. The article number (or location) in the tax treaty that contains the saving clause and its exceptions.
4. The type and amount of income that qualifies for the exemption from tax.
5. Sufficient facts to justify the exemption from tax under the terms of the treaty article.

Example. Article 20 of the U.S.-China income tax treaty allows an exemption from tax for scholarship income received by a Chinese student temporarily present in the United States. Under U.S. law, this student will become a resident alien for tax purposes if his or her stay in the United States exceeds 5 calendar years. However, paragraph 2 of the first Protocol to the U.S.-China treaty (dated April 30, 1984) allows the provisions of Article 20 to continue to apply even after the Chinese student becomes a resident alien of the United States. A Chinese student who qualifies for this exception (under paragraph 2 of the first protocol) and is relying on this exception to claim an exemption from tax on his or her scholarship or fellowship income would attach to Form W-9 a statement that includes the information described above to support that exemption.

If you are a nonresident alien or a foreign entity, give the requester the appropriate completed Form W-8 or Form 8233.

Backup Withholding

What is backup withholding? Persons making certain payments to you must under certain conditions withhold and pay to the IRS 28% of such payments. This is called "backup withholding." Payments that may be subject to backup withholding include interest, tax-exempt interest, dividends, broker and barter exchange transactions, rents, royalties, nonemployee pay, payments made in settlement of payment card and third party network transactions, and certain payments from fishing boat operators. Real estate transactions are not subject to backup withholding.

You will not be subject to backup withholding on payments you receive if you give the requester your correct TIN, make the proper certifications, and report all your taxable interest and dividends on your tax return.

Payments you receive will be subject to backup withholding if:

1. You do not furnish your TIN to the requester,
2. You do not certify your TIN when required (see the Part II instructions on page 3 for details),
3. The IRS tells the requester that you furnished an incorrect TIN,
4. The IRS tells you that you are subject to backup withholding because you did not report all your interest and dividends on your tax return (for reportable interest and dividends only), or
5. You do not certify to the requester that you are not subject to backup withholding under 4 above (for reportable interest and dividend accounts opened after 1983 only).

Certain payees and payments are exempt from backup withholding. See *Exempt payee code* on page 3 and the separate instructions for the Requester of Form W-9 for more information.

Also see *Special rules for partnerships* above.

What is FATCA reporting?

The Foreign Account Tax Compliance Act (FATCA) requires a participating foreign financial institution to report all United States account holders that are specified United States persons. Certain payees are exempt from FATCA reporting. See *Exemption from FATCA reporting code* on page 3 and the instructions for the Requester of Form W-9 for more information.

Updating Your Information

You must provide updated information to any person to whom you claimed to be an exempt payee if you are no longer an exempt payee and anticipate receiving reportable payments in the future from this person. For example, you may need to provide updated information if you are a C corporation that elects to be an S corporation, or if you no longer are tax exempt. In addition, you must furnish a new Form W-9 if the name or TIN changes for the account; for example, if the grantor of a grantor trust dies.

Penalties

Failure to furnish TIN. If you fail to furnish your correct TIN to a requester, you are subject to a penalty of $50 for each such failure unless your failure is due to reasonable cause and not to willful neglect.

Civil penalty for false information with respect to withholding. If you make a false statement with no reasonable basis that results in no backup withholding, you are subject to a $500 penalty.

Criminal penalty for falsifying information. Willfully falsifying certifications or affirmations may subject you to criminal penalties including fines and/or imprisonment.

Misuse of TINs. If the requester discloses or uses TINs in violation of federal law, the requester may be subject to civil and criminal penalties.

Specific Instructions

Line 1

You must enter one of the following on this line; **do not leave this line blank.** The name should match the name on your tax return.

If this Form W-9 is for a joint account, list first, and then circle, the name of the person or entity whose number you entered in Part I of Form W-9.

a. **Individual.** Generally, enter the name shown on your tax return. If you have changed your last name without informing the Social Security Administration (SSA) of the name change, enter your first name, the last name as shown on your social security card, and your new last name.

Note. ITIN applicant: Enter your individual name as it was entered on your Form W-7 application, line 1a. This should also be the same as the name you entered on the Form 1040/1040A/1040EZ you filed with your application.

b. **Sole proprietor or single-member LLC.** Enter your individual name as shown on your 1040/1040A/1040EZ on line 1. You may enter your business, trade, or "doing business as" (DBA) name on line 2.

c. **Partnership, LLC that is not a single-member LLC, C Corporation, or S Corporation.** Enter the entity's name as shown on the entity's tax return on line 1 and any business, trade, or DBA name on line 2.

d. **Other entities.** Enter your name as shown on required U.S. federal tax documents on line 1. This name should match the name shown on the charter or other legal document creating the entity. You may enter any business, trade, or DBA name on line 2.

e. **Disregarded entity.** For U.S. federal tax purposes, an entity that is disregarded as an entity separate from its owner is treated as a "disregarded entity." See Regulations section 301.7701-2(c)(2)(iii). Enter the owner's name on line 1. The name of the entity entered on line 1 should never be a disregarded entity. The name on line 1 should be the name shown on the income tax return on which the income should be reported. For example, if a foreign LLC that is treated as a disregarded entity for U.S. federal tax purposes has a single owner that is a U.S. person, the U.S. owner's name is required to be provided on line 1. If the direct owner of the entity is also a disregarded entity, enter the first owner that is not disregarded for federal tax purposes. Enter the disregarded entity's name on line 2, "Business name/disregarded entity name." If the owner of the disregarded entity is a foreign person, the owner must complete an appropriate Form W-8 instead of a Form W-9. This is the case even if the foreign person has a U.S. TIN.

Line 2

If you have a business name, trade name, DBA name, or disregarded entity name, you may enter it on line 2.

Line 3

Check the appropriate box in line 3 for the U.S. federal tax classification of the person whose name is entered on line 1. Check only one box in line 3.

Limited Liability Company (LLC). If the name on line 1 is an LLC treated as a partnership for U.S. federal tax purposes, check the "Limited Liability Company" box and enter "P" in the space provided. If the LLC has filed Form 8832 or 2553 to be taxed as a corporation, check the "Limited Liability Company" box and in the space provided enter "C" for C corporation or "S" for S corporation. If it is a single-member LLC that is a disregarded entity, do not check the "Limited Liability Company" box; instead check the first box in line 3 "Individual/sole proprietor or single-member LLC."

Line 4, Exemptions

If you are exempt from backup withholding and/or FATCA reporting, enter in the appropriate space in line 4 any code(s) that may apply to you.

Exempt payee code.

- Generally, individuals (including sole proprietors) are not exempt from backup withholding.
- Except as provided below, corporations are exempt from backup withholding for certain payments, including interest and dividends.
- Corporations are not exempt from backup withholding for payments made in settlement of payment card or third party network transactions.
- Corporations are not exempt from backup withholding with respect to attorneys' fees or gross proceeds paid to attorneys, and corporations that provide medical or health care services are not exempt with respect to payments reportable on Form 1099-MISC.

The following codes identify payees that are exempt from backup withholding. Enter the appropriate code in the space in line 4.

1—An organization exempt from tax under section 501(a), any IRA, or a custodial account under section 403(b)(7) if the account satisfies the requirements of section 401(f)(2)

2—The United States or any of its agencies or instrumentalities

3—A state, the District of Columbia, a U.S. commonwealth or possession, or any of their political subdivisions or instrumentalities

4—A foreign government or any of its political subdivisions, agencies, or instrumentalities

5—A corporation

6—A dealer in securities or commodities required to register in the United States, the District of Columbia, or a U.S. commonwealth or possession

7—A futures commission merchant registered with the Commodity Futures Trading Commission

8—A real estate investment trust

9—An entity registered at all times during the tax year under the Investment Company Act of 1940

10—A common trust fund operated by a bank under section 584(a)

11—A financial institution

12—A middleman known in the investment community as a nominee or custodian

13—A trust exempt from tax under section 664 or described in section 4947

The following chart shows types of payments that may be exempt from backup withholding. The chart applies to the exempt payees listed above, 1 through 13.

IF the payment is for	THEN the payment is exempt for
Interest and dividend payments	All exempt payees except for 7
Broker transactions	Exempt payees 1 through 4 and 6 through 11 and all C corporations. S corporations must not enter an exempt payee code because they are exempt only for sales of noncovered securities acquired prior to 2012.
Barter exchange transactions and patronage dividends	Exempt payees 1 through 4
Payments over $600 required to be reported and direct sales over $5,000[1]	Generally, exempt payees 1 through 5[2]
Payments made in settlement of payment card or third party network transactions	Exempt payees 1 through 4

[1] See Form 1099-MISC, Miscellaneous Income, and its instructions.

However, the following payments made to a corporation and reportable on Form 1099-MISC are not exempt from backup withholding: medical and health care payments, attorneys' fees, gross proceeds paid to an attorney reportable under section 6045(f), and payments for services paid by a federal executive agency.

Exemption from FATCA reporting code. The following codes identify payees that are exempt from reporting under FATCA. These codes apply to persons submitting this form for accounts maintained outside of the United States by certain foreign financial institutions. Therefore, if you are only submitting this form for an account you hold in the United States, you may leave this field blank. Consult with the person requesting this form if you are uncertain if the financial institution is subject to these requirements. A requester may indicate that a code is not required by providing you with a Form W-9 with "Not Applicable" (or any similar indication) written or printed on the line for a FATCA exemption code.

A—An organization exempt from tax under section 501(a) or any individual retirement plan as defined in section 7701(a)(37)

B—The United States or any of its agencies or instrumentalities

C—A state, the District of Columbia, a U.S. commonwealth or possession, or any of their political subdivisions or instrumentalities

D—A corporation the stock of which is regularly traded on one or more established securities markets, as described in Regulations section 1.1472-1(c)(1)(i)

E—A corporation that is a member of the same expanded affiliated group as a corporation described in Regulations section 1.1472-1(c)(1)(i)

F—A dealer in securities, commodities, or derivative financial instruments (including notional principal contracts, futures, forwards, and options) that is registered as such under the laws of the United States or any state

G—A real estate investment trust

H—A regulated investment company as defined in section 851 or an entity registered at all times during the tax year under the Investment Company Act of 1940

I—A common trust fund as defined in section 584(a)

J—A bank as defined in section 581

K—A broker

L—A trust exempt from tax under section 664 or described in section 4947(a)(1)

M—A tax exempt trust under a section 403(b) plan or section 457(g) plan

Note. You may wish to consult with the financial institution requesting this form to determine whether the FATCA code and/or exempt payee code should be completed.

Line 5

Enter your address (number, street, and apartment or suite number). This is where the requester of this Form W-9 will mail your information returns.

Line 6

Enter your city, state, and ZIP code.

Part I. Taxpayer Identification Number (TIN)

Enter your TIN in the appropriate box. If you are a resident alien and you do not have and are not eligible to get an SSN, your TIN is your IRS individual taxpayer identification number (ITIN). Enter it in the social security number box. If you do not have an ITIN, see *How to get a TIN* below.

If you are a sole proprietor and you have an EIN, you may enter either your SSN or EIN. However, the IRS prefers that you use your SSN.

If you are a single-member LLC that is disregarded as an entity separate from its owner (see *Limited Liability Company (LLC)* on this page), enter the owner's SSN (or EIN, if the owner has one). Do not enter the disregarded entity's EIN. If the LLC is classified as a corporation or partnership, enter the entity's EIN.

Note. See the chart on page 4 for further clarification of name and TIN combinations.

How to get a TIN. If you do not have a TIN, apply for one immediately. To apply for an SSN, get Form SS-5, Application for a Social Security Card, from your local SSA office or get this form online at *www.ssa.gov*. You may also get this form by calling 1-800-772-1213. Use Form W-7, Application for IRS Individual Taxpayer Identification Number, to apply for an ITIN, or Form SS-4, Application for Employer Identification Number, to apply for an EIN. You can apply for an EIN online by accessing the IRS website at *www.irs.gov/businesses* and clicking on Employer Identification Number (EIN) under Starting a Business. You can get Forms W-7 and SS-4 from the IRS by visiting IRS.gov or by calling 1-800-TAX-FORM (1-800-829-3676).

If you are asked to complete Form W-9 but do not have a TIN, apply for a TIN and write "Applied For" in the space for the TIN, sign and date the form, and give it to the requester. For interest and dividend payments, and certain payments made with respect to readily tradable instruments, generally you will have 60 days to get a TIN and give it to the requester before you are subject to backup withholding on payments. The 60-day rule does not apply to other types of payments. You will be subject to backup withholding on all such payments until you provide your TIN to the requester.

Note. Entering "Applied For" means that you have already applied for a TIN or that you intend to apply for one soon.

Caution: *A disregarded U.S. entity that has a foreign owner must use the appropriate Form W-8.*

Part II. Certification

To establish to the withholding agent that you are a U.S. person, or resident alien, sign Form W-9. You may be requested to sign by the withholding agent even if items 1, 4, or 5 below indicate otherwise.

For a joint account, only the person whose TIN is shown in Part I should sign (when required). In the case of a disregarded entity, the person identified on line 1 must sign. Exempt payees, see *Exempt payee code* earlier.

Signature requirements. Complete the certification as indicated in items 1 through 5 below.

1. Interest, dividend, and barter exchange accounts opened before 1984 and broker accounts considered active during 1983. You must give your correct TIN, but you do not have to sign the certification.

2. Interest, dividend, broker, and barter exchange accounts opened after 1983 and broker accounts considered inactive during 1983. You must sign the certification or backup withholding will apply. If you are subject to backup withholding and you are merely providing your correct TIN to the requester, you must cross out item 2 in the certification before signing the form.

3. Real estate transactions. You must sign the certification. You may cross out item 2 of the certification.

4. Other payments. You must give your correct TIN, but you do not have to sign the certification unless you have been notified that you have previously given an incorrect TIN. "Other payments" include payments made in the course of the requester's trade or business for rents, royalties, goods (other than bills for merchandise), medical and health care services (including payments to corporations), payments to a nonemployee for services, payments made in settlement of payment card and third party network transactions, payments to certain fishing boat crew members and fishermen, and gross proceeds paid to attorneys (including payments to corporations).

5. Mortgage interest paid by you, acquisition or abandonment of secured property, cancellation of debt, qualified tuition program payments (under section 529), IRA, Coverdell ESA, Archer MSA or HSA contributions or distributions, and pension distributions. You must give your correct TIN, but you do not have to sign the certification.

What Name and Number To Give the Requester

For this type of account:	Give name and SSN of:
1. Individual	The individual
2. Two or more individuals (joint account)	The actual owner of the account or, if combined funds, the first individual on the account[1]
3. Custodian account of a minor (Uniform Gift to Minors Act)	The minor[2]
4. a. The usual revocable savings trust (grantor is also trustee)	The grantor-trustee[1]
b. So-called trust account that is not a legal or valid trust under state law	The actual owner[1]
5. Sole proprietorship or disregarded entity owned by an individual	The owner[3]
6. Grantor trust filing under Form 1099 Filing Method 1 (see Regulations section 1.671-4(b)(2)(i)(A))	The grantor[*]
For this type of account:	**Give name and EIN of:**
7. Disregarded entity not owned by an individual	The owner
8. A valid trust, estate, or pension trust	Legal entity[4]
9. Corporation or LLC electing corporate status on Form 8832 or Form 2553	The corporation
10. Association, club, religious, charitable, educational, or other tax exempt organization	The organization
11. Partnership or multi-member LLC	The partnership
12. A broker or registered nominee	The broker or nominee
13. Account with the Department of Agriculture in the name of a public entity (such as a state or local government, school district, or prison) that receives agricultural program payments	The public entity
14. Grantor trust filing under the Form 1041 Filing Method or the Optional Form 1099 Filing Method 2 (see Regulations section 1.671-4(b)(2)(i)(B))	The trust

List first and circle the name of the person whose number you furnish. If only one person on a joint account has an SSN, that person's number must be furnished.

[2] Circle the minor's name and furnish the minor's SSN.

[3] You must show your individual name and you may also enter your business or DBA name on the "Business name/disregarded entity" name line. You may use either your SSN or EIN (if you have one), but the IRS encourages you to use your SSN.

[4] List first and circle the name of the trust, estate, or pension trust. (Do not furnish the TIN of the personal representative or trustee unless the legal entity itself is not designated in the account title.) Also see *Special rules for partnerships* on page 2.

[*] Note. Grantor also must provide a Form W-9 to trustee of trust.

Note. If no name is circled when more than one name is listed, the number will be considered to be that of the first name listed.

Secure Your Tax Records from Identity Theft

Identity theft occurs when someone uses your personal information such as your name, SSN, or other identifying information, without your permission, to commit fraud or other crimes. An identity thief may use your SSN to get a job or may file a tax return using your SSN to receive a refund.

To reduce your risk:

- Protect your SSN,
- Ensure your employer is protecting your SSN, and
- Be careful when choosing a tax preparer.

If your tax records are affected by identity theft and you receive a notice from the IRS, respond right away to the name and phone number printed on the IRS notice or letter.

If your tax records are not currently affected by identity theft but you think you are at risk due to a lost or stolen purse or wallet, questionable credit card activity or credit report, contact the IRS Identity Theft Hotline at 1-800-908-4490 or submit Form 14039.

For more information, see Publication 4535, Identity Theft Prevention and Victim Assistance.

Victims of identity theft who are experiencing economic harm or a system problem, or are seeking help in resolving tax problems that have not been resolved through normal channels, may be eligible for Taxpayer Advocate Service (TAS) assistance. You can reach TAS by calling the TAS toll-free case intake line at 1-877-777-4778 or TTY/TDD 1-800-829-4059.

Protect yourself from suspicious emails or phishing schemes. Phishing is the creation and use of email and websites designed to mimic legitimate business emails and websites. The most common act is sending an email to a user falsely claiming to be an established legitimate enterprise in an attempt to scam the user into surrendering private information that will be used for identity theft.

The IRS does not initiate contacts with taxpayers via emails. Also, the IRS does not request personal detailed information through email or ask taxpayers for the PIN numbers, passwords, or similar secret access information for their credit card, bank, or other financial accounts.

If you receive an unsolicited email claiming to be from the IRS, forward this message to *phishing@irs.gov*. You may also report misuse of the IRS name, logo, or other IRS property to the Treasury Inspector General for Tax Administration (TIGTA) at 1-800-366-4484. You can forward suspicious emails to the Federal Trade Commission at: *spam@uce.gov* or contact them at *www.ftc.gov/idtheft* or 1-877-IDTHEFT (1-877-438-4338).

Visit IRS.gov to learn more about identity theft and how to reduce your risk.

Privacy Act Notice

Section 6109 of the Internal Revenue Code requires you to provide your correct TIN to persons (including federal agencies) who are required to file information returns with the IRS to report interest, dividends, or certain other income paid to you; mortgage interest you paid; the acquisition or abandonment of secured property; the cancellation of debt; or contributions you made to an IRA, Archer MSA, or HSA. The person collecting this form uses the information on the form to file information returns with the IRS, reporting the above information. Routine uses of this information include giving it to the Department of Justice for civil and criminal litigation and to cities, states, the District of Columbia, and U.S. commonwealths and possessions for use in administering their laws. The information also may be disclosed to other countries under a treaty, to federal and state agencies to enforce civil and criminal laws, or to federal law enforcement and intelligence agencies to combat terrorism. You must provide your TIN whether or not you are required to file a tax return. Under section 3406, payers must generally withhold a percentage of taxable interest, dividend, and certain other payments to a payee who does not give a TIN to the payer. Certain penalties may also apply for providing false or fraudulent information.

- SECTION G -
APPENDICES

APPENDIX A – PROJECT LOCATION MAP

CITY OF COSTA MESA
Public Services/Engineering

North
N.T.S.

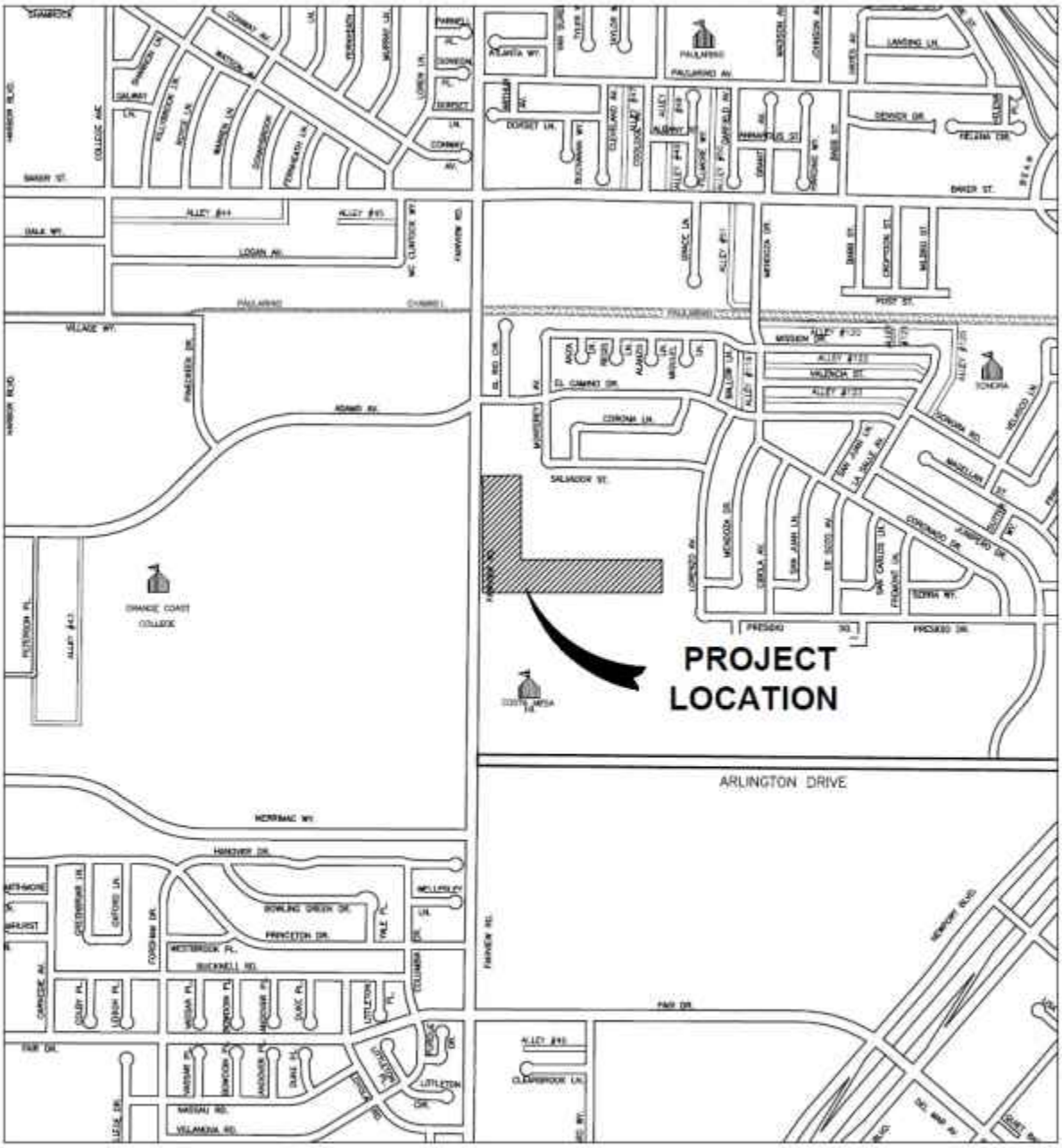

PROJECT LOCATION MAP

JACK HAMMETT SPORTS COMPLEX PARKING LOT AND ADA UPGRADES
CITY PROJECT NO. 21-05

■ PROPOSED IMPROVEMENTS

APPENDIX B – STAGING AREAS MAP

Costa Mesa

Jack Hammett Sports Complex Parking Lot & ADA Upgrades, Project #21-06

Legend

Costa Mesa

Notes

0.1 0 0.05 0.1 Miles

WGS_1984_Web_Mercator_Auxiliary_Sphere

© City of Costa Mesa

The City of Costa Mesa makes no guarantee as to the accuracy of any of the information provided and assumes no liability for any errors, omissions, or inaccuracies.

APPENDIX C – CITY AND CALTRANS STANDARD DRAWINGS

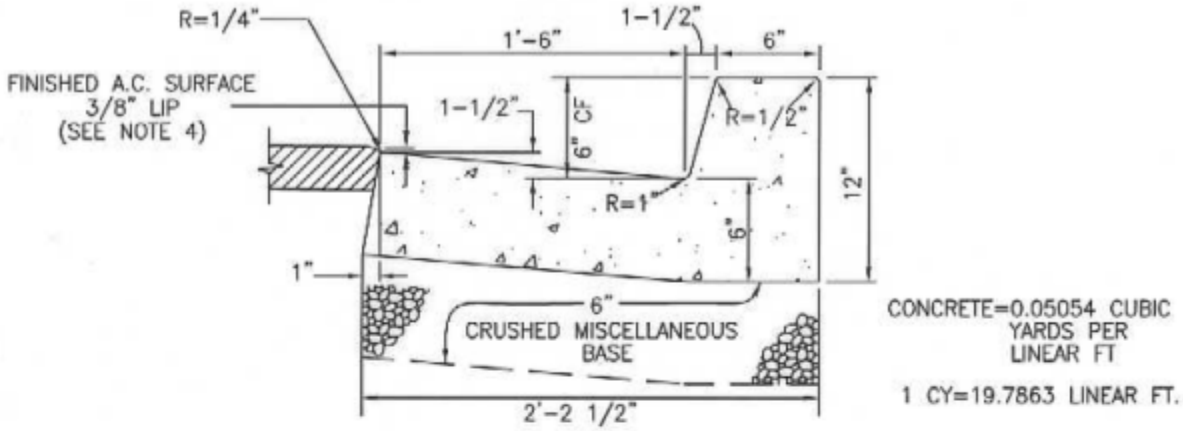

TYPE "C-6" CURB & GUTTER
N.T.S.

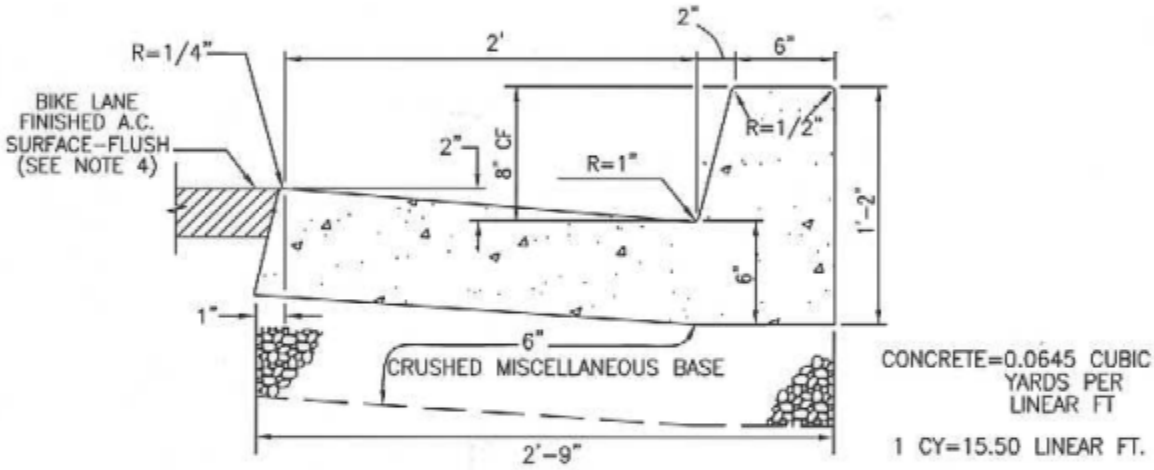

TYPE "C-8" CURB & GUTTER
N.T.S.

NOTES:

1. 1/4" EXPANSION JOINTS SHALL BE PLACED AT 40' INTERVALS AND AT ALL BCR'S AND ECR'S. 1/8" x 2" WEAKENED PLANE JOINTS SHALL BE PLACED AT 10' INTERVALS. FOR JOINT DETAILS, SEE STD DWG NO 314.
2. CONCRETE SHALL BE CLASS 560-C-3250 (330-C-23) PER LATEST EDITION OF STANDARD SPECIFICATIONS FOR PUBLIC WORKS CONSTRUCTION SEC. 201-1.
3. SUBGRADE RELATIVE COMPACTION SHALL NOT BE LESS THAN 90%.
4. ALL AC FINISHED SURFACES SHALL HAVE A 3/8" LIP, EXCEPT AREAS WITH BIKE LANES AND MAJOR ARTERIALS, WHERE FINISHED AC SURFACE SHALL BE FLUSH WITH EDGE OF GUTTER.

CITY OF COSTA MESA PUBLIC SERVICES DEPARTMENT	TYPE "C" CURB & GUTTER	Costa Mesa
RECOMMENDED ERNESTO MUÑOZ CITY ENGINEER		STD. DWG. NO. 312

FILE NAME: STD312J01.DWG REVISED: SHT. 1 OF 1

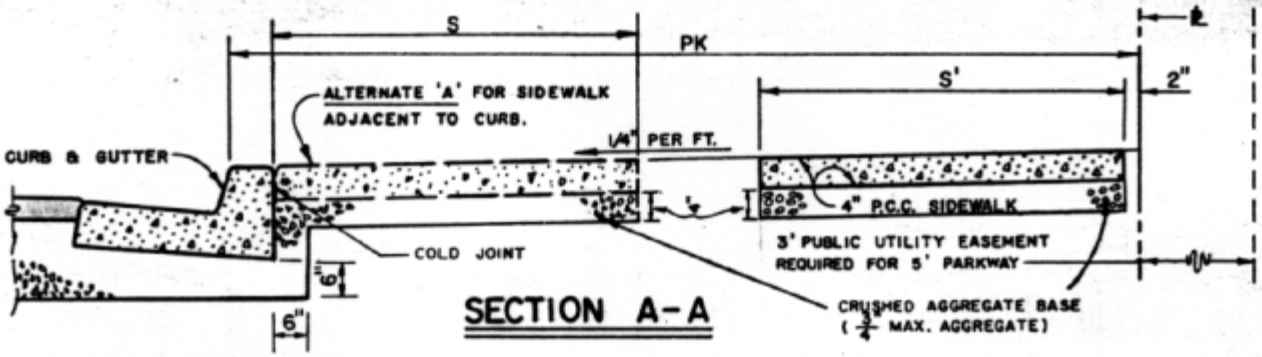

SECTION A-A

DIMENSIONS:

PK = PARKWAY WIDTH
S = SIDEWALK WIDTH

50' R/W--PK=5'	S=4'-4"	
60' R/W--PK=10'	S=4'-4"	
84' R/W--PK=7'	S=4'-4"	RESIDENTIAL, 6'-4" COMMERCIAL & INDUSTRIAL
106' R/W--PK=7'	S=4'-4"	RESIDENTIAL, 6'-4" COMMERCIAL & INDUSTRIAL
120' R/W--PK=8'	S=4'-4"	RESIDENTIAL, 7'-4" COMMERCIAL & INDUSTRIAL

S' = 4'-0"

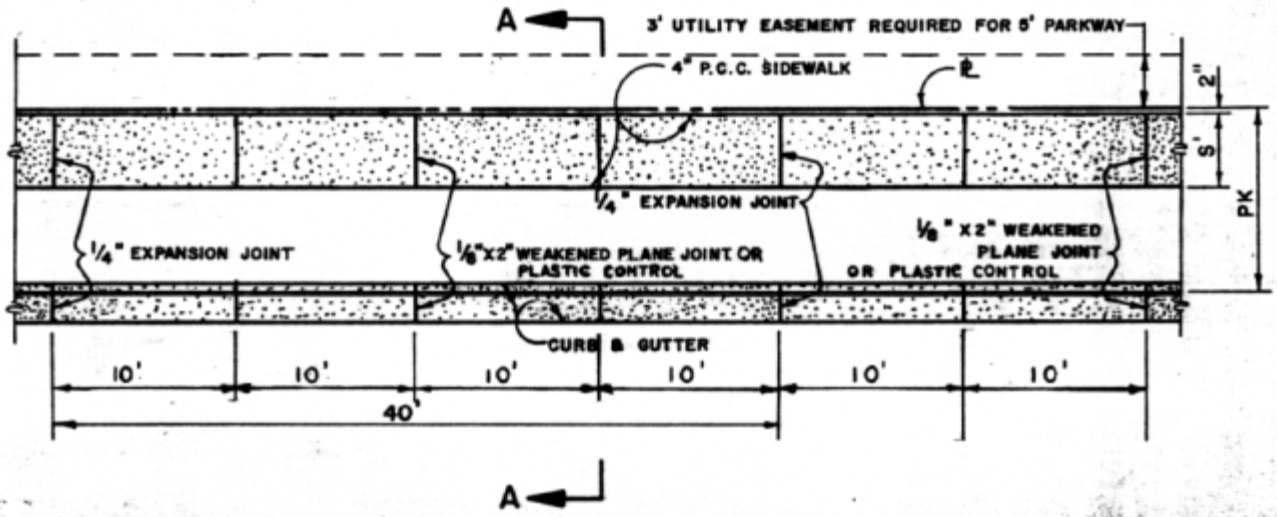

PLAN

NOTES:

1. 1/4" EXPANSION JOINTS SHALL BE PLACED AT 40' INTERVALS AND AT THE END OF ALL CURB RETURNS.
2. 1/8" X 2" PLASTIC CONTROL OR WEAKENED PLANE JOINTS SHALL BE PLACED AT 10' INTERVALS
3. EXPANSION JOINTS AND WEAKENED PLANE JOINTS FOR SIDEWALK SHALL BE PLACED TO COINCIDE WITH JOINTS OF THE CURB.
4. FOR EXPANSION JOINT AND WEAKENED PLANE JOINT DETAILS, SEE STD. DWG. NO. 314.
5. SIDEWALK THICKNESS IS 4" EXCEPT AT DRIVEWAYS WHERE IT SHALL BE 6" THICK.
6. CONCRETE SHALL BE 520-C-2500 PER CURRENT EDITION OF STANDARD SPECIFICATIONS SEC.201-1.1.2.
7. 10' INTERVAL BETWEEN TRANSVERSE JOINTS MAY BE VARIED, IF JOINING EXISTING IMPROVEMENTS AND APPROVED BY CITY ENGINEER.
8. WIDEN SIDEWALK TO PROVIDE MIN. CLEAR DISTANCE PER STD. DWG. NO. 413.
9. ALL EXPOSED CORNERS ON SIDEWALK SHALL BE ROUNDED OFF WITH 1/2" RADIUS, EXCEPT AS OTHERWISE SHOWN ON STD. DWG. NO. 314.

CITY OF COSTA MESA CALIFORNIA PUBLIC SERVICES DEPARTMENT	STANDARD SIDEWALK DETAILS	DRAWN W.A.B. SCALE NONE
	APPROVED BD Mattern DATE 12/13/85 BRUCE D. MATTERN R.C.E. 19388	STD. DWG. NO. 411

REV.

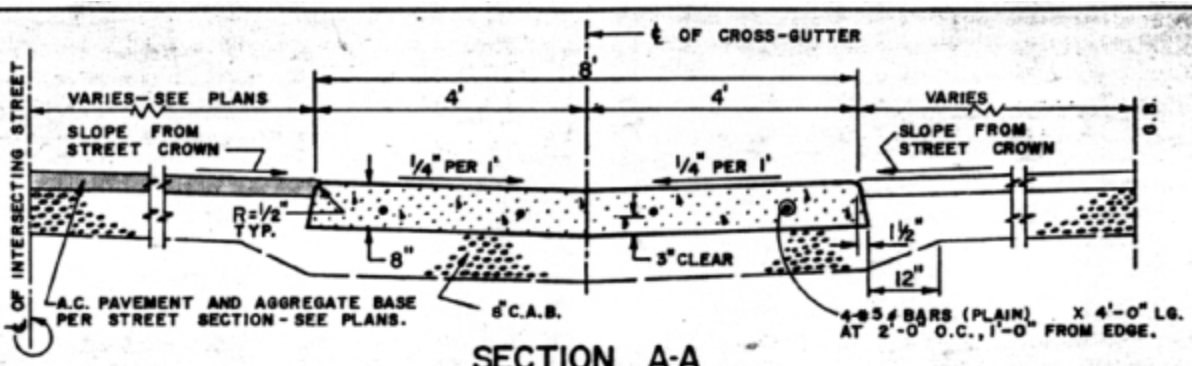

SECTION A-A

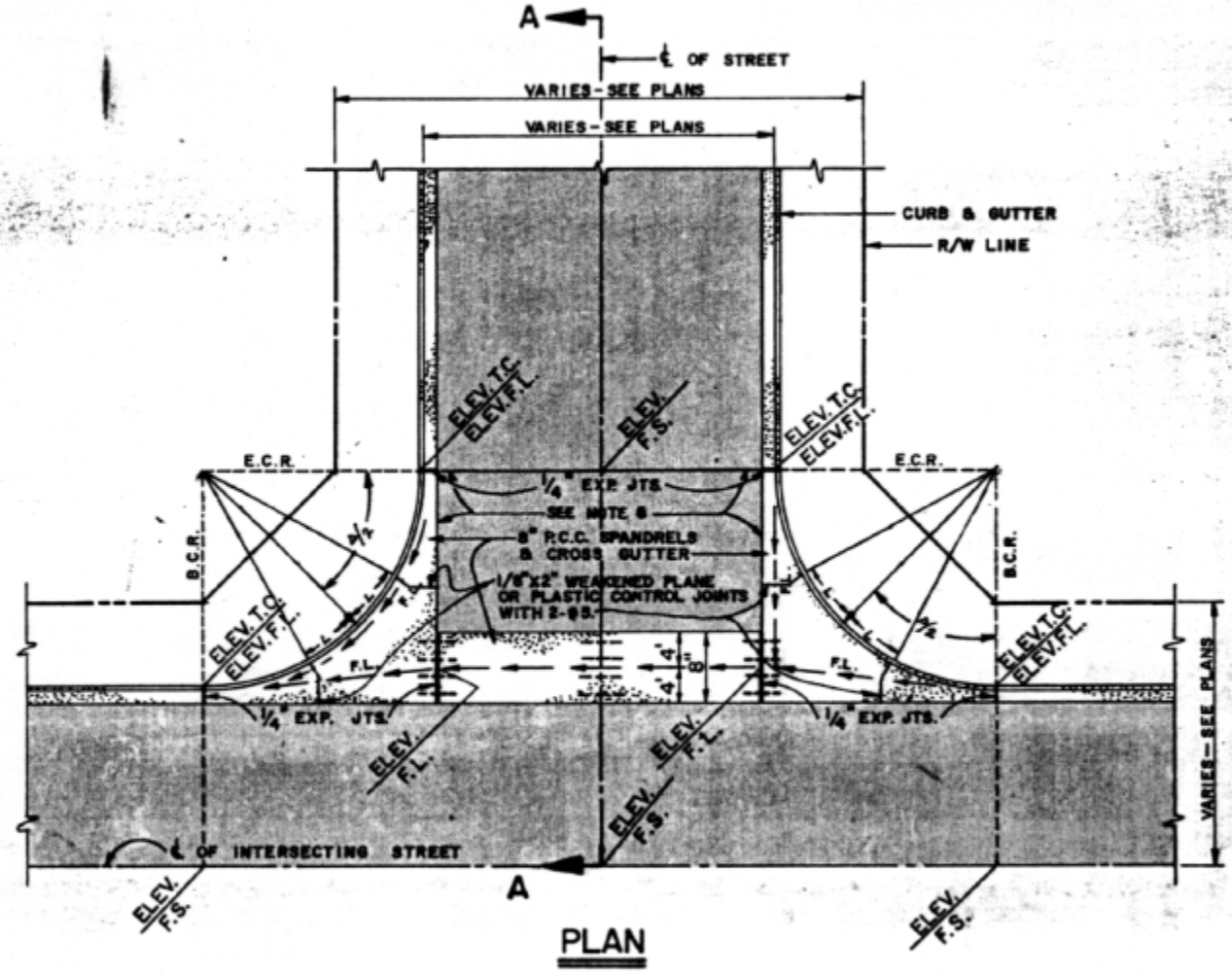

PLAN

NOTES:

1. SMOOTH TROWEL 8" WIDE FLOW LINE IN CROSS-GUTTER AND SPANDRELS.
2. AGGREGATE BASE THICKNESS FOR SPANDRELS SHALL BE THE SAME AS FOR CROSS-GUTTER.
3. POUR CURB MONOLITHICALLY WITH SPANDREL.
4. FOR JOINT DETAILS, SEE STD. DWG. NO. 314 AND 414.
5. CONCRETE SHALL BE S60 C 3250 PER CURRENT EDITION OF STANDARD SPECIFICATIONS FOR PUBLIC WORKS CONSTRUCTION, SEC 201-1.1.2.
6. ALL ELEVATIONS SHALL BE PER PLAN.
7. DISTANCE L FROM MIDDLE ORDINATE OF CURB RETURN TO JOINT SHALL BE 7' FOR 8" C.F. OR 6' FOR 6" C.F..
8. ANY CROSS-GUTTER TO BE CONSTRUCTED ON LESS THAN 0.20 % SHALL HAVE DRAINAGE STRUCTURES CONSTRUCTED TO MITIGATE THE ADVERSE EFFECTS OF NUISANCE WATER AND FULL CONCRETE APRON WITH EXPANSION JOINTS ALONG ℄ AND ALONG EDGE OF GUTTERS.

CITY OF COSTA MESA CALIFORNIA PUBLIC SERVICES DEPARTMENT	TYPICAL CROSS-GUTTER APPROVED B.D. Mattern DATE 12/12/85 BRUCE D. MATTERN R.C.E. 19388	DRAWN MKS SCALE NONE STD. DWG. NO. 415

REV.

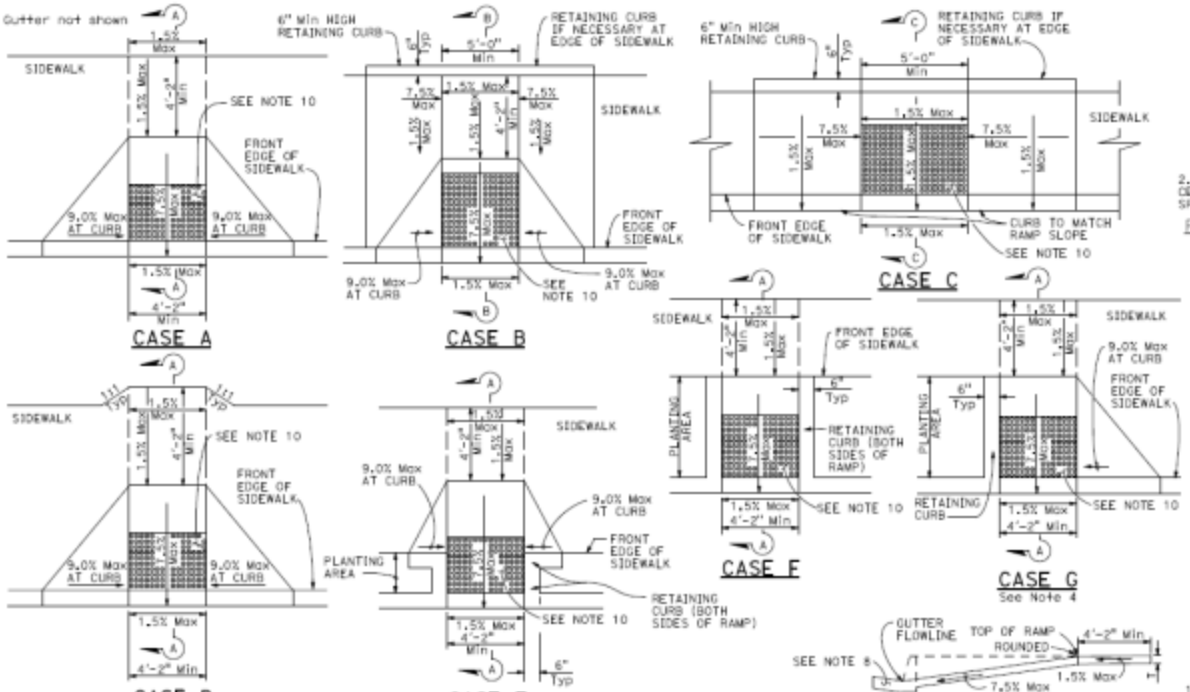

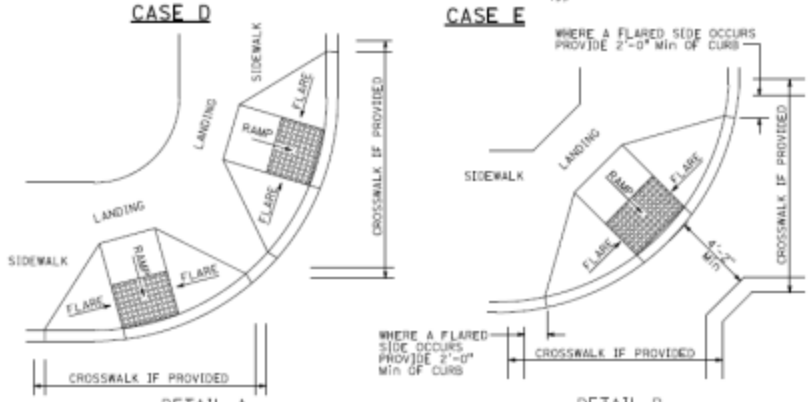

DETAIL A

TYPICAL TWO-RAMP CORNER INSTALLATION

See Note 1

DETAIL B

TYPICAL ONE-RAMP CORNER INSTALLATION

See Notes 1 and 3

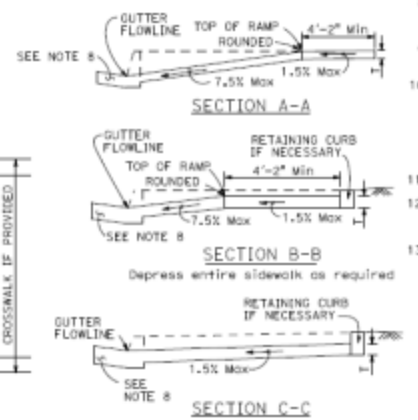

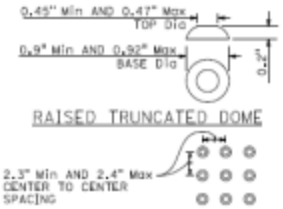

DETECTABLE WARNING SURFACE

NOTES: See Note 10

1. As site conditions dictate, Case A through Case G curb ramps may be used for corner installations similar to those shown in Detail A and Detail B. The case of curb ramps used in Detail A do not have to be the same. Case A through Case G curb ramps also may be used at mid block locations, as site conditions dictate. For specific site condition configuration, including the conform to existing sidewalk, see Project Plans.
2. If distance from curb to back of sidewalk is too short to accommodate ramp and 4'-2" platform (landing) as shown in Case A, the sidewalk may be depressed longitudinally as in Case B or C or may be widened as in Case D.
3. When ramp is located in center of curb return, crosswalk configuration must be similar to that shown for Detail B.
4. As site conditions dictate, the retaining curb side and the flared side of the Case G ramp shall be constructed in reversed position.
5. The ramp portion of the curb ramp is a typical rectangle, unless modified in the Project Plans.
6. Side slope of ramp flares vary uniformly from a maximum of 9.0% at curb to conform with longitudinal sidewalk slope adjacent to top of the ramp, except in Case C and Case F.
7. The adjacent surfaces at transitions at curb ramps to walks, gutters, and streets shall be at the same level.
8. Counter slopes of adjoining gutters and road surfaces immediately adjacent to and within 24 inches of the curb ramp shall not be steeper than 1V:20H (5.0%). Gutter pan slope shall not exceed 1" of depth for each 2'-0" of width.
9. Transition gutter pan slope from 1" of depth for each 2'-0" of width to match typical gutter pan slope per Standard Plan A87A.
10. The detectable warning surface will be a rectangle as shown at back of curb, unless modified in the Project Plans. Curb ramps shall have a detectable warning surface that extends the full width and 3'-0" depth of the ramp. Detectable warning surfaces shall extend the full width of the ramp except a maximum gap of 1 inch is allowed on each side of the ramp. Detectable warning surfaces shall conform to the requirements in the Standard Specifications.
11. Sidewalk and ramp thickness, "T", shall be 3½" minimum.
12. Utility pull boxes, manholes, vaults and all other utility facilities within the boundaries of the curb ramp will be relocated or adjusted to grade by the owner prior to, or in conjunction with, curb ramp construction.
13. Detectable warning surface may have to be cut to allow removal of utility covers while maintaining detectable warning width and depth.

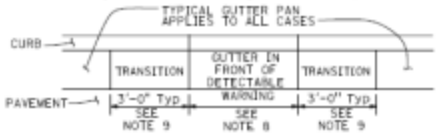

GUTTER PAN TRANSITION

STATE OF CALIFORNIA
DEPARTMENT OF TRANSPORTATION

CURB RAMP DETAILS

NO SCALE

A88A

DIST	COUNTY	ROUTE	POST MILES TOTAL PROJECT	SHEET NO.	TOTAL SHEETS

REGISTERED CIVIL ENGINEER

May 31, 2018
PLANS APPROVAL DATE

THE STATE OF CALIFORNIA OR ITS OFFICERS OR AGENTS SHALL NOT BE RESPONSIBLE FOR THE ACCURACY OR COMPLETENESS OF SCANNED COPIES OF THIS PLAN SHEET.

REGISTERED PROFESSIONAL ENGINEER
Rebecca Lynn Avery
C56455
12-31-19
CIVIL
STATE OF CALIFORNIA

2018 STANDARD PLAN A88A

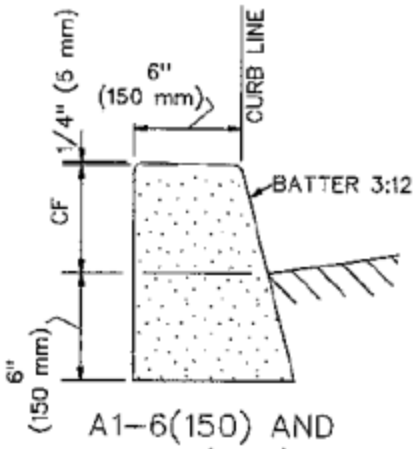

A1–6(150) AND
A1–8(200)

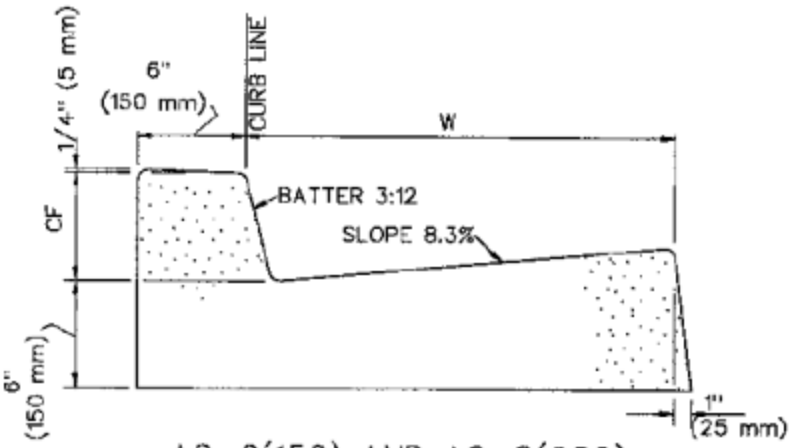

A2–6(150) AND A2–8(200)

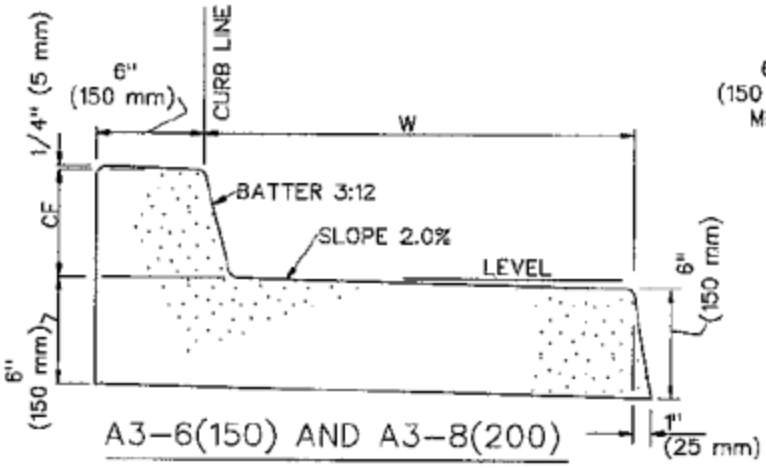

A3–6(150) AND A3–8(200)

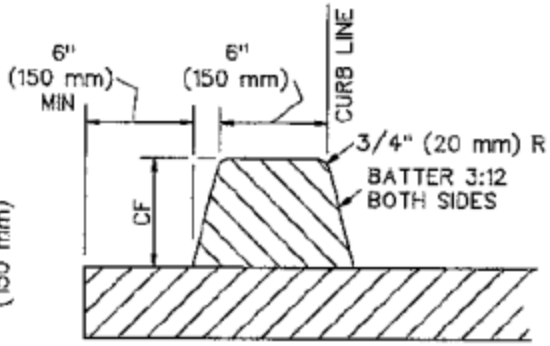

D1–6(150) AND
D1–8(200)

NOTES:

1. THE LAST NUMBER IN THE DESIGNATION IS THE CURB FACE (CF) HEIGHT, INCHES (mm). IF SHOWN AS 'VAR' THE CURB FACE VARIES.
2. GUTTER WIDTH, W, IS 24" (600 mm) UNLESS OTHERWISE SPECIFIED.
3. TYPES A1, A2, A3 AND C1 SHALL BE CONSTRUCTED OF CONCRETE.
4. TYPE D1 CURB SHALL BE CONSTRUCTED OF ASPHALT CONCRETE.
5. TYPE C1 CURB SHALL BE ANCHORED WITH STEEL DOWELS AS SHOWN OR WITH AN EPOXY APPROVED BY THE ENGINEER.
6. ALL EXPOSED CORNERS ON CONCRETE CURBS AND GUTTERS SHALL BE ROUNDED WITH A 1/2" (15 mm) RADIUS.

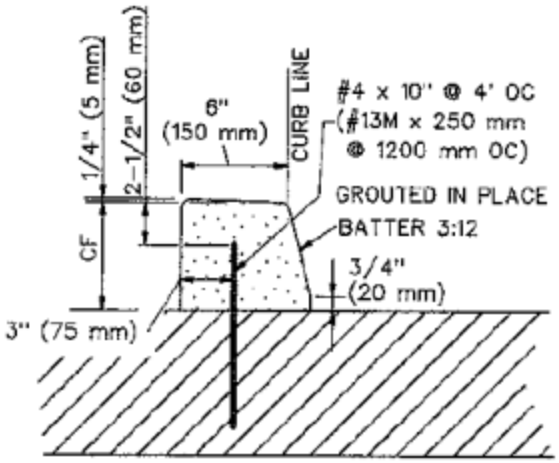

C1–6(150) AND C1–8(200)

STANDARD PLANS FOR PUBLIC WORKS CONSTRUCTION

PROMULGATED BY THE PUBLIC WORKS STANDARDS INC. GREENBOOK COMMITTEE 1994 REV. 1998, 2009, 2021

CURB AND GUTTER – BARRIER

USE WITH STANDARD SPECIFICATIONS FOR PUBLIC WORKS CONSTRUCTION

STANDARD PLAN
120–3
SHEET 1 OF 1

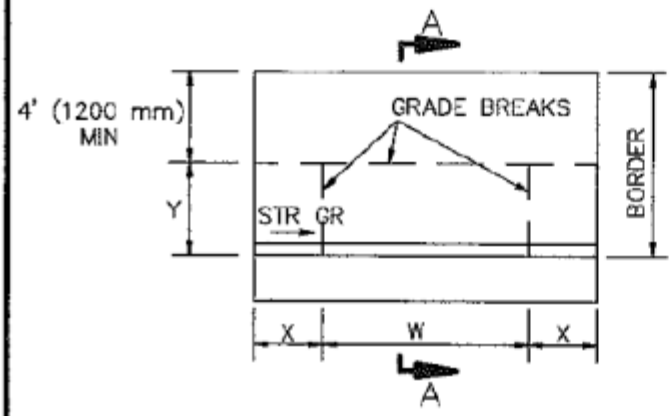

TYPE A

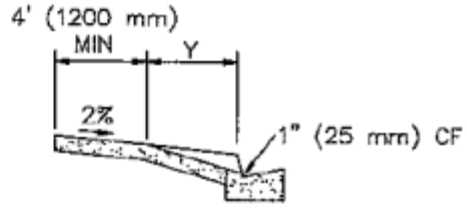

SECTION A–A

CURB FACE, inches (mm)	X, inches (mm)	Y, inches (mm)
6" (150) or less	3'–0" (900)	4'–0" (1200)
7" (175)	3'–6" (1050)	4'–9" (1425)
8" (200)	4'–0" (1200)	5'–8" (1700)
9" (225)	4'–6" (1350)	6'–6" (1950)
10" (250)	5'–0" (1500)	7'–3" (2175)
11" (275)	5'–6" (1650)	8'–0" (2400)
12" (300) or more	6'–0" (1800)	8'–9" (2625)

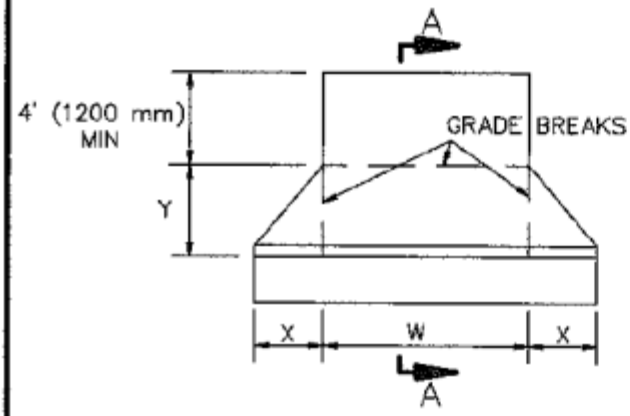

TYPE B

NOTES:

1. RESIDENTIAL DRIVEWAYS SHALL BE 4" (100 mm) THICK PCC.
2. COMMERCIAL DRIVEWAYS SHALL BE 6" (150 mm) THICK PCC.
3. WEAKENED PLANE JOINTS SHALL BE INSTALLED AT BOTH SIDES OF A DRIVEWAY AND AT 10' (3.0 m) INTERVALS.
4. CURB FOR TYPE C DRIVEWAY SHALL BE INTEGRAL AND MATCH ADJACENT CONSTRUCTION.
5. REFER TO LOCAL DEVELOPMENT REGULATIONS FOR AMERICANS WITH DISABILITIES ACCESS REQUIREMENTS AND MAXIMUM PERMITTED DRIVEWAY WIDTHS.

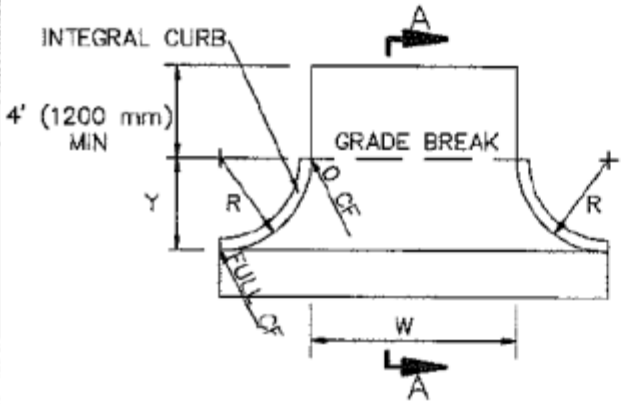

TYPE C

STANDARD PLANS FOR PUBLIC WORKS CONSTRUCTION

PROMULGATED BY THE PUBLIC WORKS STANDARDS INC. GREENBOOK COMMITTEE 1984 REV. 1996, 2009

DRIVEWAY APPROACHES

USE WITH STANDARD SPECIFICATIONS FOR PUBLIC WORKS CONSTRUCTION

STANDARD PLAN 110–2

SHEET 1 OF 1

APPENDIX D – EXISTING DOCUMENTS

The following documents are incorporated herein as part of these specifications and are available as separate pdf files **electronically, at no cost, via PlaneBids.com (a third-party website) at:**
https://www.planetbids.com/portal/portal.cfm?CompanyID=45476.

1. Zoning Approval Letter, by City of Costa Mesa, June 20, **2019.**

2. Soccer Complex Plans, by David Evans and Associates, **1998.**

3. Costa Mesa Farm Sports Complex Soccer Field Lighting, by Dream Engineering **2006.**

4. Costa Mesa Farms Sports Complex Soccer Field (#5 and #6) Lighting, City Project No. 10-06, by Design West Engineering, **2010.**

5. Farms Sports Complex Utility Plan (Partial) Existing Conditions and New Conduits Layout, **2007.**

6. Foundation Soils Investigation for Proposed Soccer Complex, by RAS, **1998.**

7. Geotechnical Investigation, Costa Mesa High School Athletic Facility Improvements, by MTGL, **2014.**

8. Percolation Testing and Parking Pavement Design, Jack Hammett Sports Complex and Bark Park, by Willdan Geotechnical, **2016.**

9. Updated Geotechnical Report, Jack Hammett by Willdan 2019

All bidders must register with **PlaneBids.com** in order to retrieve plans, specifications, addenda, bidder's list, etc. It is the responsibility of prospective bidders to download and print the bid documents for review and bid.

The City of Costa Mesa does not warrant, represent, or guarantee the accuracy, completeness, or adequacy of information provided from any third party source. The City shall not be responsible or liable in any way whatsoever for any loss or damages of whatever kind, nature, or scope, including, but not limited to, time, money or goodwill arising from errors, inaccuracies, or omissions in any documents and/or information retrieved from any third party source.

APPENDIX E – UTILITIES LAYOUT (2007)

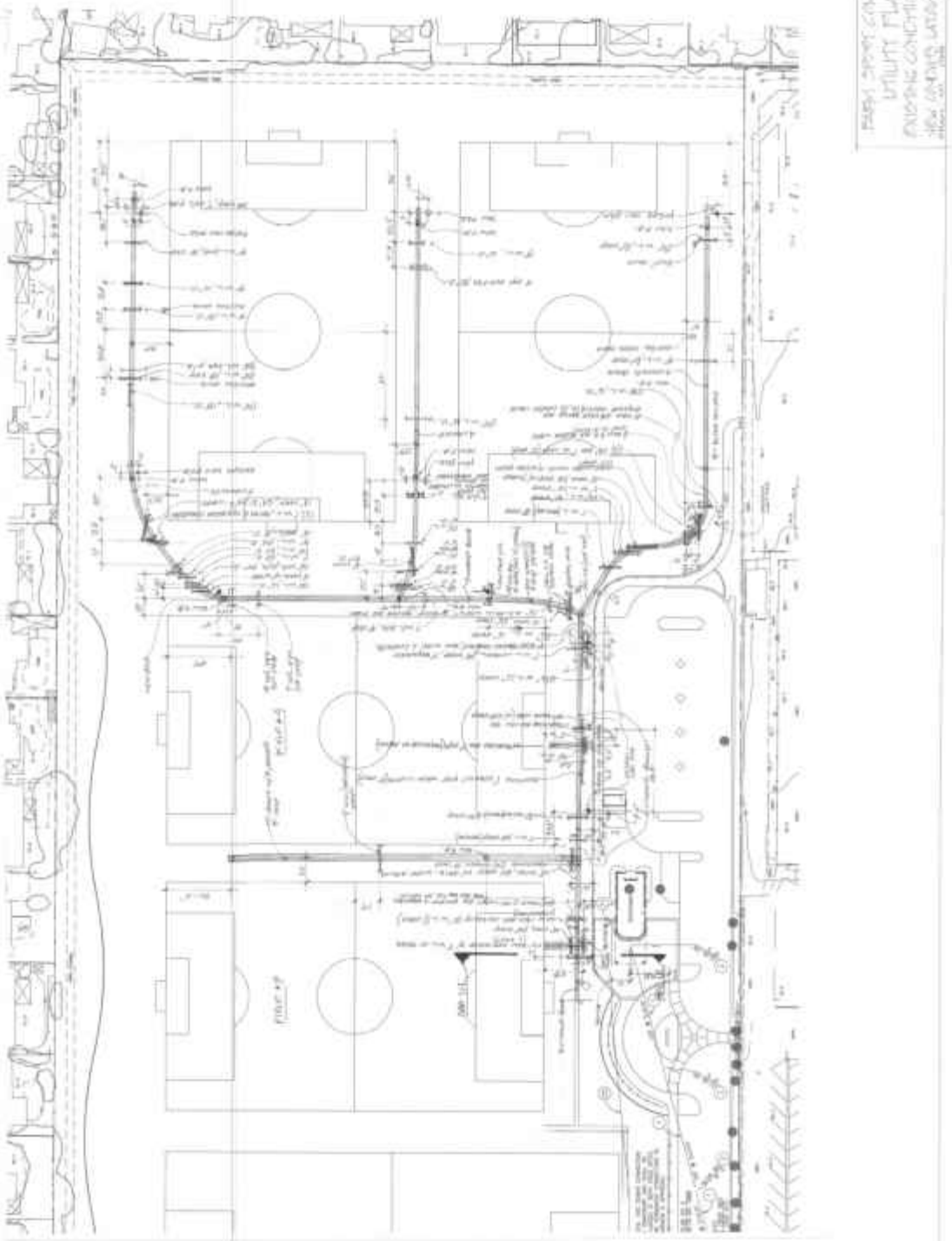

*For reference only. Last updated in 2007, may not be reflective of the current existing conditions. Contractor to be responsible to determine any conflict by contacting utility companies, potholing, GPR, etc. prior the commencement of work.

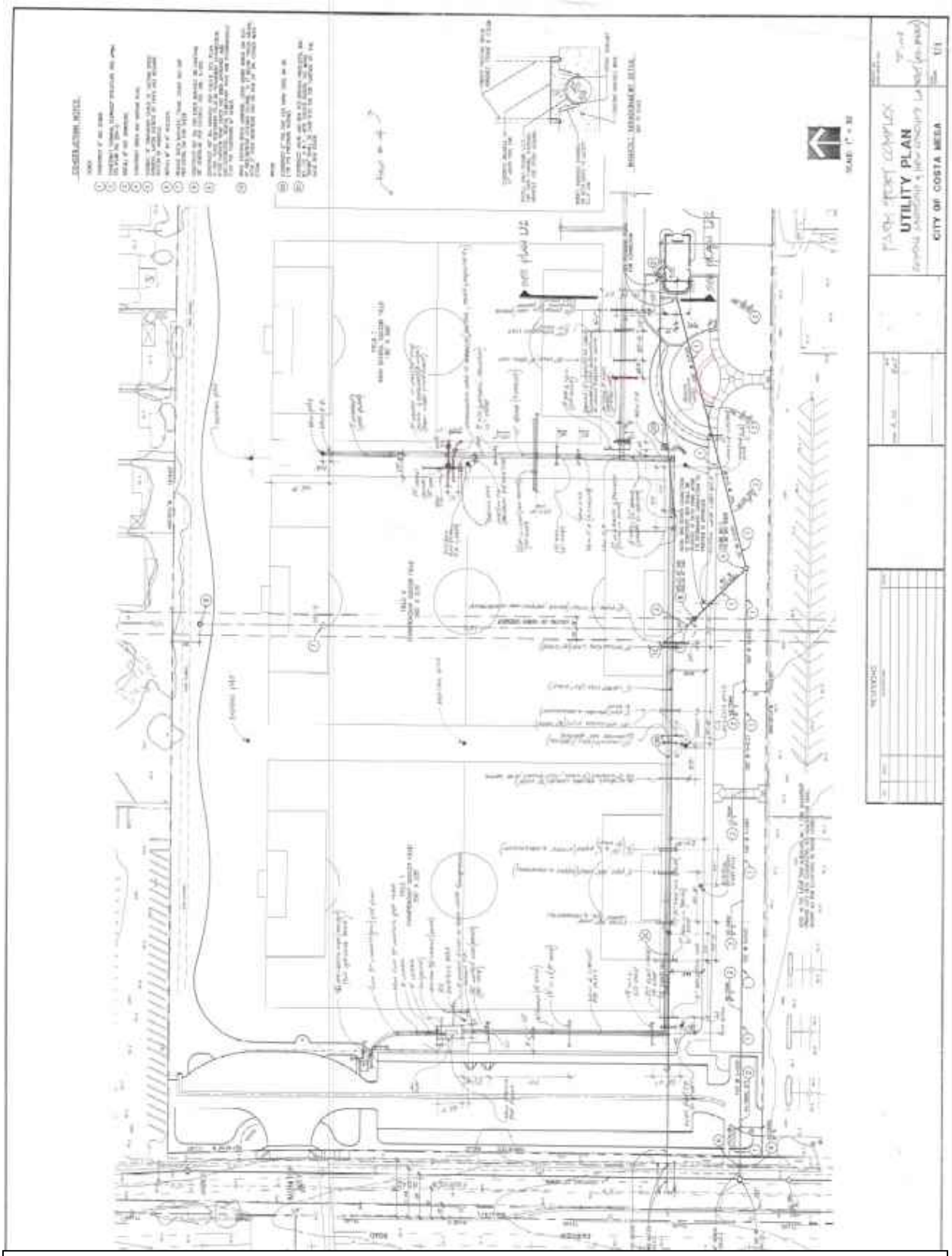

*For reference only. Last updated in 2007, may not be reflective of the current existing conditions. Contractor to be responsible to determine any conflict by contacting utility companies, potholing, GPR, etc. prior the commencement of work.

CITY OF COSTA MESA

P.O. BOX 12000 77 FAIR DRIVE CALIFORNIA 92628·1200
FROM THE DEPARTMENT OF PUBLIC SERVICES/ENGINEERING DIVISION

DATE: **SEPTEMBER 23, 2021**

TO: **ALL PROSPECTIVE BIDDERS**

SUBJECT: **BID ADDENDUM NO. 1 – JACK HAMMETT SPORTS COMPLEX PARKING LOT AND ADA UPGRADES, CITY PROJECT NO. 21-05**

Please forward this addendum to the appropriate individual as soon as possible. To assist our office in confirming the delivery of this addendum, please sign acknowledging receipt herein and e-mail a copy of this sheet to *Janet.Zuazo@costamesaca.gov*. **A COPY WILL NOT BE SENT BY MAIL.**

Received by: _____

Company: _____

All bidders shall register with *PlanetBids* in order to retrieve addenda. It is the responsibility of each prospective bidder to check *PlanetBids* on a DAILY basis through the close of bids for any applicable addenda or updates.

BID OPENING DATE: **NO CHANGE - TUESDAY, SEPTEMBER 28, 2021**

BID OPENING TIME: **NO CHANGE**

BID OPENING PLACE: **NO CHANGE**

This addendum, effective on this date, addresses the following items:

RESPONSES TO PRE-BID REQUESTS FOR INFORMATIONS (RFIs):

Q1. Could you please confirm whether the above referenced project is subject to a PLA (Project Labor Agreement), a PSA (Project Stabilization Agreement), a CBA (Collective Bargaining Agreement), a CWA (Community Workforce Agreement), or anything of that nature?

A1. This is a Public Works Project as defined by the State of California Labor Code. See Section A - Notice Inviting Bids, Items 7 and 8, and Section B – Information For Bidders item 20 with respect to the requirements for compliance with the State of California Labor Code. Nothing in the specifications require a PLA, PSA, CBA, or CWA.

Q2. Just want to confirm that this project is NOT VWA or PLA.

A2. This is a Public Works Project as defined by the Labor Code. See Section A - Notice Inviting Bids, Items 7 and 8, and Section B – Information For Bidders Item 20 with respect to the

requirements for compliance with the State of California Labor Code. Nothing in the specifications require a PLA, PSA, CBA, or CWA.

Q3. Is there a self-performance threshold requirement for the prime contractor?

A3. Yes. The Contractor shall comply with Section 3-2 Self-Performance of the 2018 Standard Specifications for Public Works ("Greenbook").

Q.4 When is the start date of this project?

A.4 The City anticipates the start of Construction in December 2021, pending Contract Award by the City Council and final execution of the Contract Agreement, Bonds, and Insurance with the lowest responsive and responsible bidder.

Q.5 Please clarify what construction project references are required. As stated on sheet P-12 of the specifications it refers to the projects of similar audio/visual installation utilizing Creston products.

Q.6 Construction Project Reference Section asks to submit a list of "audio/visual installation projects completed utilizing Creston products within the last 36 months." Please confirm the project reference requirements for this project.

Q.7 Please Clarify Construction Project References instructions on P-12.

"In order to more fully evaluate your firm's background and experience for the project herein proposed, it is requested that you submit a list of similar audio/visual installation projects completed utilizing Creston products, or in progress, within the last 36 months. This information will be used to evaluate whether the bid is responsive and or responsible to the call for bids."

Q.8 Please Clarify the highlighted "Red Marks Below", in your Bid Item List, there is no such thing to provide "Audio/Visual Installation Utilizing Creston Products".

"Reference: Construction Project References
Page P-12 Section C

In order to more fully evaluate your firm's background and experience for the project herein proposed, it is requested that you submit a list of similar audio/visual installation projects completed utilizing Creston products, or in progress, within the last 36 months. This information will be used to evaluate whether the bid is responsive and or responsible to the call for bids."

A.5 To A.8 P-12 has been updated and attached to this Addendum No.1 to reflect the proper Construction Project References for this Project.

Q.9 For clarification please advise what is the required licenses needed for this bid or direct me where to locate that information, I do not see that listed?

A.9 Section A – Notice Inviting Bids, item 6 provides the required California Contractor License for this Project.

Q.10 1. What is the finish for the precast column caps? It lists T3 but then says T2 (all sides top) – see attached photo.

2. Additionally, are the caps A and B the same dimensions of 16” x 12” x 32”?

3. I want to confirm the 12 soccer balls are to be green, blue, and white. Not the standard white and black. Conflicting info on the plans --see attached photo.

4. Do all items require the Non-Sacrificial Anti Graffiti Coating or just standard sealer? Many items list a “Matte Sealer”.

5. I noticed one of the spheres has lifting inserts in the details and the other sphere and soccer do not, do you want lifting inserts on all of these spherical items?

6. Lastly, sometimes dealing with QCP items, but the site furnishing specification doesn’t list QCP. Can we go through material equivalent other than QCP?

A.10.1 Santa Fe Sand Blast should be used for T3.

A10.2 Yes caps A and B are the same dimensions

A10.3 Soccer balls should be white/green and white/blue, but not both on the same ball. Balls to alternate between white/green and white/blue.

A10.4 Standard sealer

A10.5 Not necessary for the smaller spheres, but can be included for easier lifting. The lifting inserts should be as specified by the manufacture.

A10.6 Yes.

Q.11 Per bid set of plans sheet LC.1 Construction Plan we are to install 2 Pedestal Mounted Bottle Fillers. Please provide the location on the plans where we can find the POC to water for the 2 Bottle Fillers.

Q.12 Keynote 3e on LC.1 calls for a pedestal mounted bottle filler with bi-level drinking fountain. The drawings do not show any connection for the drinking fountain to the site domestic water and sewer. Please clarify.

A.11 & A.12 Plan Sheets C.2 and C.4 have been updated and attached to this Addendum No.1, which depicts the domestic water Point of Connection (POC) for the 2 Pedestal Mounted Bottle Fillers as well as the waste line connection to a Dry Well (C.2, Detail F).

Q.13 Per Bid Item Schedule:
64 Storage Building, 5-Units (890) SF LS 1

Checking the Plans, there are no detailed locations for Storage Building, 5-Units. Please provide Site Locations of the Storage Building.

A.13 Plan Sheet C.4 and LC.1 depicts the location of the Storage Building, 5 unit.

Q.14 I just wanted to confirm that Davis-Bacon is not a requirement for this project. Please let me know. Thanks.

A.14 There is no Federal Funding for this Project, therefore there is no requirements for compliance with the Davis-Bacon Act.

Q.15 1. Please confirm the address that the bid bond needs to be mailed to, and to whom to address it to.

2. Please confirm we need to complete proposal from included in Section C and on PlanetBids Line items.

A.15.1 The Bid Bond shall be submitted to the City of Costa Mesa, 77 Fair Drive, Costa Mesa, Ca 92627, attention City Clerk.

A.15.2 The Bid Proposal pages P1 to P20 within Section C shall be completed as required and the bid prices and totals from the Bid Schedule pages P3 to P7 shall also be provided within same PlanetBids line items.

Q.16 We here at Bulldog Paving would like to put together a bid for any unit pavers and truncated domes, will you please link us to the plans?

A.16 The Plans and Specifications for this Project are located on PlanetBids.com

Q.17 Demolition Plan C.3 Note 1 States: The contractor is responsible for the demolition of the site and shall remove and dispose of all structures above and or below ground, Any hazardous material encountered shall be handled and removed as required by local and or state laws at no cost to the owner. In reference to below ground removals, does the City anticipate any chemicals of concern in the soil (TPH or Pesticide Impacted Soil) ?
If so, please provide analytical data of existing soil. Prospective bidder's will need this information in order to request disposal rates for impacted soil. If analytical data is not available will the City consider providing an allowance for unforeseen conditions?

A.17 The City does not anticipate hazardous material removal with respect to the demolition scope of work. However, if said material is discovered by the Contractor and verified as such by the Contractor, Bid Item 69 – "Allowance for unsuitable soils conditions and additional sound mitigation" maybe utilized per the requirements for said Bid Item as defined within the Specifications.

The following section relates to changes/modifications/clarifications to the Plans and Specifications:

Plans

REPLACE: *SHEETS C.1, C.2, C.4, C.5, LC.1, LC.2, CD.3, LI.1, A2.0, A.2.1, A2.2, A3.0, E-0.4., AND E-2.1*

WITH: *ADDENDUM NO. 1 SHEETS C.1, C.2, C.4, C.5, LC.1, LC.2, CD.3, LI.1, A2.0, A.2.1, A2.2, A3.0, E-0.4., AND E-2.1*

Some of the Delta revisions as depicted in the revised plan sheets were included in the Bid Set at time of bid advertisement. The following plan modifications related to this addendum are herein further defined:

DELTA REVISIONS:

SHEET C.1:

- *Revised Index of Drawings sheet 41 of 41 from E-4.1 to E3.1*

SHEET C.2:

- *Revised Sections C-C and D-D to reflect 5" AC depth dimension.*
- *Renamed Section G-G to Section E-E.*
- *Revised Detail C to reflect 8" min CMB dimension.*
- *Added Detail F – Dry Well Detail.*

SHEET C.3:

- *Added eight (8) concrete wheel stops along the parking area adjacent to the storage building.*
- *Provided grade information and 10 foot dimension for the transition from 6" to 10" curb face.*
- *Replaced 6" curb with 6" curb and gutter including grade and dimension information at the SW section of the traffic circle.*
- *Provided finished surface grade at south location of concrete pad for rolling gate.*
- *Added Notes 22, 23, and 24 for 2- pedestal mounted bottle filler locations*
- *Added water service point of connection, dry well, and ¾" PVC waterline for 2-pedestal mounted bottle filler locations.*
- *Provided additional grades for retaining curb Detail 1.*

SHEET C.5

- *Revised Detail 3 to reflect continuous truncated dome installation.*

SHEET LC.1

- *Revised Note 3b call-out on the plans and within the Site Furnishing table*
- *Update the plans to reflect the continuous truncated domes at the ADA access area adjacent to the main gate.*

SHEET LC.2

- *Updated the plans to reflect the continuous truncated domes at the ADA access area locations.*
- *Updated call-out for Precast Soccer Ball.*

SHEET CD.3

- *Update call-out for T3 – Precast Column Cap for Columns 'A' and 'B'.*
  .

SHEET LI.1

- *Update call-out/note for master valve/flow sensor.*

SHEET A2.0

- *Provided additional call-out detail for roll-up doors.*

SHEET A2.1

- *Provided additional Door ADA signage notes.*

SHEET A2.2

- *Provided additional detail for Roll-up Steel Door.*

SHEET A3.0

- *Added notes for Building Section (Storage Building No. 1) Section 1-3*

SHEET E-0.4

- *Modified electrical for Roll-up Doors*

SHEET E-2.1

- *Modified electrical for Roll-up Doors*

Specifications

REPLACE: *Bid Schedule Page P4*
WITH: *Revised Bid Schedule Page P4*

REPLACE: *Bid Schedule Page P6*
WITH: *Revised Bid Schedule Page P6*

REPLACE: *Proposal Page P-12*
WITH: *Revised Proposal Page P-12*

REPLACE: *Section E, 32-16-00 Page 4*
WITH: *Revised Section E, 32-16-00 Page 4*

REPLACE: *Section E, 32-16-00 Page 9*
WITH: *Revised Section E, 32-16-00 Page 9*

The contents of this addendum shall have precedence over all related provisions within the contract documents. It is the intent of the City to clarify the above-mentioned items to all bidders and should it be necessary to request clarification on these matters, please contact Naz Mokarram, PhD, PE, GE at (714) 754-5357.

Please acknowledge receipt of all addenda on the Revised Proposal Page “P-12.”

Sincerely,

Naz Mokarram

Naz Mokarram, PE
Senior Engineer

PROPOSAL SCHEDULE
BASE BID
(CONTINUED)

Item	Description	Approx. Quantity	Unit	Unit Price	Total Amount
19	Remove and Dispose Existing Curb Ramp	2	EA	$_____	$_____
20	Construct ADA Curb Ramp	3	EA	$_____	$_____
21	Construct Truncated Domes	3	EA	$_____	$_____
22	Remove and Dispose Concrete Gutter	30	LF	$_____	$_____
23	Construct 3' wide Concrete V-Gutter	30	LF	$_____	$_____
24	Adjust to Grade Existing Sewer Cleanout	6	EA	$_____	$_____
25	Furnish & Install Concrete Wheel Stop	19	EA	$_____	$_____
26	Sawcut and Remove PCC Sidewalk	7,800	SF	$_____	$_____
27	Construct Driveway Approach	2	EA	$_____	$_____
28	Construct 6" thick fill-in concrete over 6" CMB	25	SF	$_____	$_____
29	Furnish and Install Parking Sign	8	EA	$_____	$_____
30	Striping, Signing, Marking and Pavement Markers	1	LS	$_____	$_____
31	Paving 1a: Concrete Flatwork with Topcast Top-Surface Retarder Finish	12,850	SF	$_____	$_____
32	Paving 1c: Concrete Flatwork Heavy Sand Blast Finish	120	SF	$_____	$_____
33	Paving 1d: Interlocking Concrete Pavers	880	SF	$_____	$_____
34	Concrete Header (10" wide)	245	LF	$_____	$_____

Bidder's Initials_____

PROPOSAL SCHEDULE
BASE BID
(CONTINUED)

Item	Description	Approx. Quantity	Unit	Unit Price	Total Amount
52	Pedestal Mounted Bottle Filler With Bi-Level Drinking Fountain	2	EA	$_____	$_____
53	Existing Irrigation Adjustments	1	LS	$_____	$_____
54	New Irrigation System	1	LS	$_____	$_____
55	Soil Preparation and Fine Grading	25,510	SF	$_____	$_____
56	Weed Abatement	25,510	SF	$_____	$_____
57	Tree - 36" Box	49	EA	$_____	$_____
58	Shrub - #15 Container	80	EA	$_____	$_____
59	Shrub - #5 Container	1,248	EA	$_____	$_____
60	Shrub - #1 Container	768	EA	$_____	$_____
61	Damaged Turf Replacement	19,600	SF	$_____	$_____
62	Wood Mulch (3" thick)	236	CY	$_____	$_____
63	(90) Day Maintenance	1	LS	$_____	$_____
64	Storage Building, 5-Units (952 SF)	1	LS	$_____	$_____
65	Electrical – Parking Lot	1	LS	$_____	$_____
66	Electrical – Storage Building	1	LS	$_____	$_____
67	Allowance for additional work items as directed by the City	1	FA	$_45,000___	$_45,000__
68	Allowance for unforeseen utility conflicts	1	FA	$_45,000	$_45,000
69	Allowance for unsuitable soil conditions and additional sound mitigation	1	FA	$_35,000	$_35,000

Bidder's Initials_____

Bidder shall signify receipt of all Addenda here, if any:

Addendum No.	Date Received	Bidder's Signature

CONSTRUCTION PROJECT REFERENCES

In order to more fully evaluate your firm's background and experience for the project herein proposed, it is requested that you submit a list of similar projects completed, or in progress, within the last 36 months. This information will be used to evaluate whether the bid is responsive and or responsible to the call for bids.

Date Project Awarded	Awarding Agency	Agency's Contract Administrator

Bidder's Initials

Saw cutting shall be accomplished by the use of a power driven saw. The depth of the cut shall be deep enough to provide a clean, straight break without loosening, cracking, or damaging adjoining asphalt or concrete. A clean sawcut edge shall be maintained until new concrete curb is constructed.

All necessary sawcutting of existing concrete Curb or any existing improvements shall be to the lines as required by the ENGINEER. Sawcutting shall be included in the unit price and no further compensation shall be made.

It is Contractor's responsibility to protect all existing adjacent features such as landscaping, irrigation system, utility boxes, etc. in place per Section 300-1.2 of the Standard Specifications. All damages to these items shall be fixed to the satisfaction of the ENGINEER without any additional compensation.

A. CURB RAMP

The construction of the concrete sidewalk adjacent to the new curb ramps shall conform to Section 03 30 53 - MISCELLANEOUS CONCRETE of these Specifications.

The curb ramp improvements shall be in conformance with Caltrans Standard Plans, SPPWC Standard Drawings and details shown on the project plans, and applicable sections of the GREEN BOOK. 4-inches of Crushed Miscellaneous Base (CMB) material shall be placed under the sidewalk and curb ramp.

Concrete shall be class 520-C-2500 and match the existing concrete sidewalk color.

Crushed Miscellaneous Base (CMB) material and construction shall conform to Subsection 200 and 301 of the GREEN BOOK and as directed by the ENGINEER. The sieve size shall be ¾-inch (fine).

All sprinkler systems encountered and damaged by the Contractor's operations shall be replaced in kind. Compensation for this work shall be included within the Clearing and Grubbing and Demolition LS bid item.

Contractor shall submit a sample of the detectable warning surface to the ENGINEER for approval, prior to start of construction.

1. Construction of Wheelchair Ramps:

The Contractor shall construct new concrete wheelchair ramps, flares, monolithic curbs, and other miscellaneous concrete construction conforming to Section 303-5 of the Standard Specifications and APWA Standard Drawings with lines and grades to meet existing. In order to meet ADA requirements, cross slope of new sidewalk shall be 2%. Four (4) inches of CMB shall be required under all sidewalks and wheelchair ramps. The Contractor may be directed to construct new concrete walkways or steps in landscaped areas where required.

A. Bid Item Descriptions

Payment for **"Construct 6" Curb and Gutter Type (C-6") (W=18") Per City of Costa Mesa Std. DWG No. 312"** shall be made at the contract unit price per **Linear Foot (LF)**, and shall be based on field measurements. The contract unit price shall include full compensation for all the aforementioned specifications herein including, forming, supplying, placing, concrete, base, compaction, sub-base preparation, joint material, finish work, and all labor, equipment, materials, supplies as necessary to complete the work as defined herein and as depicted on the plans. The AC and base section for tie-in to the Curb and Gutter shall paid for within the bid item for 5" AC over 8" Base and no additional compensation will be allowed therefor.

Payment for **"Construct 6" Curb Type A1-6(150)"** shall be made at the contract unit price per **Linear Foot (LF)**, and shall be based on field measurements. The contract unit price shall include full compensation for all the aforementioned specifications herein including, forming, supplying, placing, concrete, base, compaction, sub-base preparation, joint material, finish work, transition from 6" to 10" curb face, and all labor, equipment, materials, supplies as necessary to complete the work as defined herein and as depicted on the plans. The AC and base section for tie-in to the Curb shall paid for within the bid item for 5" AC over 8" Base and no additional compensation will be allowed therefor.

Payment for **"Construct ADA Curb Ramp"** shall be made at the contract unit price per **Each (EA)**, and shall be based on the required ramp limits and details necessary to comply with the ADA requirements and as shown on the plans. The Concrete Sidewalk on either side of the ramp tie-in shall be considered as included in the bid items described under Section 03 30 53 - MISCELLANEOUS CONCRETE of these Specifications. The contract unit price shall include full compensation for all the aforementioned specifications herein including, forming, supplying, placing, concrete, base, compaction, sub-base preparation, joint material, curb, retaining curb, finish work, truncated domes per CBC 11B-705, and all labor, equipment, materials, supplies as necessary to complete the work as defined herein, as depicted on the plans, and as required to comply with ADA. The AC and base section for tie-in to the Curb Ramp shall paid for within the bid item for 5" AC over 8" Base and no additional compensation will be allowed therefor.

Payment for **"Construct Truncated Domes"** shall be made at the contract unit price per **Each (EA)**, and shall be installed in accordance with the Plans and Specifications and shall include, truncated domes per CBC 11B-705, and all labor, equipment, materials, supplies as necessary to complete the work as defined herein, as depicted on the plans, and as required to comply with ADA. No additional compensation will be allowed therefor.

Payment for **"Construct 3' wide Concrete V-Gutter"** shall be made at the contract unit price per **Linear Foot (LF)**, and shall be based on field measurements. The contract unit price shall include full compensation for all the aforementioned specifications herein including, forming, supplying, placing, concrete, base, compaction, sub-base preparation, joint material, tie-in as required, finish work, and

CITY OF COSTA MESA
CALIFORNIA

JACK HAMMETT SPORTS COMPLEX
PARKING LOT IMPROVEMENTS
2750 FAIRVIEW ROAD
CITY PROJECT NO. 21-05

GRADING GENERAL NOTES

1. ALL WORK SHALL BE IN ACCORDANCE WITH THE GRADING CODE OF THE COUNTY OF ORANGE AND ANY AMENDMENTS BY THE CITY OF COSTA MESA OR SPECIAL REQUIREMENTS OF THE PERMIT. A COPY OF THE GRADING CODE AND MANUAL SHALL BE RETAINED ON THE JOB SITE WHILE WORK IS IN PROGRESS.
2. GRADING SHALL NOT START WITHOUT FIRST NOTIFYING THE CITY INSPECTOR. A PRE-GRADING MEETING ON THE SITE IS REQUIRED BEFORE START OF GRADING WITH THE FOLLOWING PEOPLE PRESENT: OWNER, GRADING CONTRACTOR, DESIGN CIVIL ENGINEER, SOIL ENGINEER, ENGINEERING GEOLOGIST, DISTRICT GRADING INSPECTOR AND WHEN REQUIRED THE ARCHEOLOGIST AND PALEONTOLOGIST. THE REQUIRED INSPECTIONS FOR GRADING WILL BE EXPLAINED AT THIS MEETING.
3. ISSUANCE OF GRADING PERMIT DOES NOT ELIMINATE THE NEED FOR PERMIT FROM OTHER AGENCIES WITH REGULATORY RESPONSIBILITIES FOR CONSTRUCTION ACTIVITIES ASSOCIATED WITH THE WORK AUTHORIZED ON THIS PLAN.
4. THE GRADING PERMIT AND AN APPROVED COPY OF THE GRADING PLAN SHALL BE ON THE PERMITTED SITE WHILE WORK IS IN PROGRESS.
5. PRELIMINARY SOIL AND GEOLOGY REPORTS AND SUBSEQUENT REPORTS AS APPROVED BY THE BUILDING DIVISION ARE CONSIDERED A PART OF THE APPROVED GRADING PLAN.
6. THE SOIL ENGINEER AND ENGINEERING GEOLOGIST SHALL PERFORM SUFFICIENT INSPECTIONS AND BE AVAILABLE DURING GRADING AND CONSTRUCTION TO VERIFY COMPLIANCE WITH THE PLANS, SPECIFICATIONS AND THE CODE WITHIN THEIR PURVIEW.
7. THE CIVIL ENGINEER SHALL BE AVAILABLE DURING GRADING TO VERIFY COMPLIANCE WITH THE PLANS, SPECIFICATIONS, CODE AND ANY SPECIAL CONDITIONS OF THE PERMIT WITHIN THEIR PURVIEW.
8. SUB DRAIN OUTLETS SHALL BE COMPLETED AT THE BEGINNING OF THE SUB DRAIN CONSTRUCTION.
9. THE EXACT LOCATIONS OF THE SUB DRAINS SHALL BE SURVEYED IN THE FIELD FOR LINE/GRADE AND AS SHOWN AS-GRADED PLANS.
10. AREAS TO RECEIVE FILL SHALL BE PROPERLY PREPARED AND APPROVED WITHIN BY THE SOIL ENGINEER AND THE BUILDING OFFICIAL PRIOR TO TO PLACING FILL.
11. THE EXISTING SOIL WITHIN THE PAD AREA TO BE OVER EXCAVATED TO 1' UNDER FOOTING AND TO 2' OUTSIDE FOOTPRINT OF BUILDING. FILL SHALL BE BENCHED INTO COMPETENT MATERIALS PER OCPW STANDARD PLAN NO. 1322.
12. ALL EXISTING FILLS SHALL BE APPROVED BY THE BUILDING OFFICIAL OR REMOVED PRIOR TO PLACING ADDITIONAL FILL.
13. FILL SHALL BE COMPACTED THROUGHOUT TO A MINIMUM OF 90% RELATIVE COMPACTION. AGGREGATE BASE FOR ASPHALTIC AREAS SHALL BE COMPACTED TO A MINIMUM OF 95% RELATIVE COMPACTION.
14. CUT AND FILL SLOPES HALL BE NO STEEPER THAN 2-FOOT HORIZONTAL TO 1-FOOT VERTICAL (2:1) EXCEPT WHERE SPECIFICALLY APPROVED OTHERWISE.
15. ALL CUT SLOPES SHALL BE INVESTIGATED BOTH DURING AND AFTER GRADING BY THE ENGINEERING GEOLOGIST TO DETERMINE IF ANY SLOPE STABILITY PROBLEM EXISTS. SHOULD EXCAVATION DISCLOSE ANY GEOLOGICAL HAZARDS OR POTENTIAL GEOLOGICAL HAZARDS, THE ENGINEERING GEOLOGIST SHALL SUBMIT RECOMMENDED TREATMENT TO THE BUILDING OFFICIAL FOR APPROVAL.
16. WHERE SUPPORT OR BUTTRESSING OF CUT AND NATURAL SLOPES IS DETERMINED TO BE NECESSARY BY THE ENGINEERING GEOLOGIST AND SOIL ENGINEER, THE SOIL ENGINEER SHALL SUBMIT DESIGN LOCATIONS AND CALCULATIONS TO THE BUILDING OFFICIAL PRIOR TO CONSTRUCTION. THE ENGINEERING GEOLOGIST AND SOIL ENGINEER SHALL INSPECT AND CONTROL THE CONSTRUCTION OF THE BUTTRESSING AND CERTIFY TO THE STABILITY OF THE SLOPE AND ADJACENT STRUCTURES UPON COMPLETION.
17. WHEN CUT PADS ARE BROUGHT TO NEAR GRADE, THE ENGINEERING GEOLOGIST SHALL DETERMINE IF THE BEDROCK IS EXTREMELY FRACTURES OR FAULTED AND WILL READILY TRANSMIT WATER. IF CONSIDERED NECESSARY BY THE ENGINEERING GEOLOGIST AND SOIL ENGINEER, A COMPACTED FILL BLANKET WILL BE PLACE.
18. ALL TRENCH BACKFILL SHALL BE TESTED AND APPROVED BY THE SOIL ENGINEER.
19. ANY EXISTING IRRIGATION LINES AND CISTERNS SHALL BE REMOVED OR CRUSHED IN PLACE AND APPROVED BY THE THE BUILDING OFFICIAL AND SOIL ENGINEER.
20. ANY EXISTING WATER WELLS SHALL BE ABANDONED IN COMPLIANCE WITH THE SPECIFICATIONS APPROVED BY ORANGE COUNTY, HEALTH CARE AGENCY, AND DIVISION OF ENVIRONMENTAL HEALTH.
21. ANY EXISTING CESSPOOLS AND SEPTIC TANKS SHALL BE ABANDONED IN COMPLIANCE WITH THE CALIFORNIA PLUMBING CODE.
22. STOCKPILING OF EXCESS MATERIALS SHALL BE APPROVED BY THE BUILDING OFFICIAL PRIOR TO EXCAVATION.
23. EXPORT SOIL MUST BE TRANSPORTED TO A LEGAL DUMP OR TO A PERMITTED SITE APPROVED BY THE BUILDING DIVISION.
24. THE PERMITTEE IS RESPONSIBLE FOR DUST CONTROL MEASURES.
25. THE PERMITTEE SHALL GIVE REASONABLE NOTICE TO THE OWNER OF ADJOINING LANDS AND BUILDING PRIOR TO BEGINNING EXCAVATIONS WHICH MAY AFFECT THE LATERAL AND SUBJACENT SUPPORT OF THE ADJOINING PROPERTY. THE NOTICE SHALL STATE THE INTENDED DEPTH OF EXCAVATION AND WHEN IT WILL COMMENCE. THE ADJOINING OWNER SHALL BE ALLOWED AT LEAST 30 DAYS AND REASONABLE ACCESS ON THE PERMITTED PROPERTY TO PROTECT HIS STRUCTURE, IF HE SO DESIRES, UNLESS OTHERWISE PROTECTED BY LAW.
26. ALL CONCRETE STRUCTURES THAT COME IN CONTACT WITH ON-SITE SOILS SHALL BE CONSTRUCTED WITH TYPE V CEMENT, UNLESS DEEMED UNNECESSARY BY SOLUBLE SULFATE-CONTENT TESTS CONDUCTED BY THE SOIL ENGINEER.
27. SLOPES EXCEEDING 5 FEET IN HEIGHT SHALL BE PLANTED WITH AN APPROVED MATERIAL. IN ADDITION, SLOPES EXCEEDING 15 FEET IN HEIGHT SHALL BE PROVIDE WITH, AN APPROVED IRRIGATION SYSTEM, UNLESS OTHERWISE APPROVED BY THE BUILDING OFFICIAL.
28. ALL EXISTING DRAINAGE COURSES THROUGH THIS SITE SHALL REMAIN OPEN UNTIL FACILITIES TO HANDLE STORM WATER ARE APPROVED AND FUNCTIONAL; HOWEVER, IN ANY CASE, THE PERMITTEE SHALL BE HELD LIABLE FOR ANY DAMAGE DUE TO OBSTRUCTING NATURAL DRAINAGE PATTERNS.
29. SANITARY FACILITIES SHALL MAINTAIN ON THE SITE.
30. THE LOCATION AND PROTECTION OF ALL UTILITIES IS RESPONSIBILITY OF THE PERMITTEE.
31. APPROVED PROTECTIVE MEASURES AND TEMPORARY DRAINAGE PROVISIONS SHALL BE USED TO PROTECT ADJOINING PROPERTIES DURING GRADING.
32. GRADING OPERATIONS INCLUDING MAINTENANCE OF EQUIPMENT HUMAN OCCUPANCY SHALL BE CONDUCTED BETWEEN HOURS OF 7:00 AM AND 7:00 PM MONDAY THRU FRIDAY. SATURDAYS 9:00 AM THRU 6:00 PM. PROHIBITED ALL HOURS SUNDAYS AND THE FOLLOWING FEDERAL HOLIDAYS: CHRISTMAS DAY, NEW YEARS DAY, MEMORIAL DAY, LABOR DAY AND THANKSGIVING DAY. CMMC SEC 13-279.

(A.) ALL CONSTRUCTION VEHICLES OR EQUIPMENT, FIXED OR MOBILE, OPERATED WITHIN 1000' OF A DWELLING SHALL BE EQUIPPED WITH PROPERLY OPERATING AND MAINTAINED MUFFLERS.

(B.) STOCKPILING AND/OR VEHICLE STAGING AREAS SHALL BE LOCATED AS FAR AS PRACTICABLE FROM DWELLINGS AND WITHIN LIMITS OF GRADING PERMIT.

33. ASPHALT SECTIONS MUST BE: PARKING STALL=5" A/C OVER 8" A/B AND PER PROJECT SPECIFICATIONS.
34. ROOF GUTTERS SHALL BE INSTALLED TO PREVENT ROOF DRAINAGE FROM FALLING ON MANUFACTURED SLOPES.
35. THE GRADING CONTRACTOR SHALL SUBMIT A STATEMENT OF COMPLIANCE TO THE APPROVED GRADING PLAN PRIOR TO FINAL APPROVAL.
36. THE COMPACTION REPORT AND APPROVAL FROM THE SOIL ENGINEER SHALL INDICATE THE TYPE OF FIELD TESTING PERFORMED. THE METHOD OF OBTAINING THE IN-PLACE DENSITY SHALL BE IDENTIFIED WHETHER SAND CONE, DRIVE RING, OR NUCLEAR, AND SHALL BE NOTED FOR EACH TEST. SUFFICIENT MAXIMUM DENSITY DETERMINATIONS SHALL BE PERFORMED TO VERIFY THE ACCURACY OF THE MAXIMUM DENSITY CURVES USED BY THE FIELD TECHNICIAN.
37. IN THE EVENT THAT SOIL CONTAMINATION IS DISCOVERED DURING EXCAVATION AND REMOVALS OF AN EXISTING TANK, WORK SHALL BE STOPPED UNTIL A SITE ASSESSMENT AND MITIGATION PLAN HAS BEEN PREPARED, SUBMITTED AND APPROVED BY HCA/ENVIRONMENTAL HEALTH AND PDSD/GRADING.

EROSION CONTROL

38. IN THE CASE OF EMERGENCY, CALL CITY OF COSTA MESA AT WORK PHONE (714) 754-5000 AND CITY OF COSTA MESA PUBLIC SERVICES DEPARTMENT AT (714) 754-5323
39. EQUIPMENT AND WORKERS FOR EMERGENCY WORK SHALL BE MADE AVAILABLE AT ALL TIMES DURING THE RAINY SEASON. NECESSARY MATERIALS SHALL BE AVAILABLE ON THE SITE AND STOCKPILED AT THE CONVENIENT LOCATIONS TO FACILITATE RAPID CONSTRUCTIONS OF TEMPORARY DEVICES WHEN RAIN IS IMMINENT.
40. EROSION CONTROL DEVICES SHALL NOT BE REMOVED OR MODIFIED WITHOUT THE APPROVAL OF THE BUILDING OFFICIAL.
41. ALL REMOVABLE EROSION PROTECTIVE DEVICES SHALL BE IN PLACE AT THE END OF EACH WORKING DAY WHEN A 5-DAY RAIN PROBABILITY FORECAST EXCEEDS 41%.
42. AFTER A RAINSTORM, ALL SILT AND DEBRIS SHALL BE REMOVED FROM STREETS, CHECK BERMS AND BASINS.
43. GRADED AREAS ON THE PERMITTED AREA MUST DRAIN AWAY FROM THE FACE OF SLOPES AT THE CONCLUSION OF EACH WORKING DAY. DRAINAGE IS TO BE DIRECTED TOWARD DESILTING FACILITIES.

41\. THE PERMITTEE AND CONTRACTOR SHALL BE RESPONSIBLE AND SHALL TAKE NECESSARY PRECAUTIONS TO PREVENT PUBLIC TRESPASS ONTO AREAS WHERE IMPOUNDED WATER CREATES A, HAZARDOUS CONDITION.

45\. THE PERMITTEE AND CONTRACTOR SHALL INSPECT THE EROSION CONTROL WORK AND INSURE THAT THE WORK IS IN ACCORDANCE WITH THE APPROVED PLANS.

ENVIRONMENTAL NOTES

46. THE PERMITTEE SHALL NOTIFY ALL GENERAL CONTRACTORS, SUBCONTRACTORS, MATERIALS SUPPLIERS, LESSEES, AND PROPERTY OWNERS: THAT DUMPING OF CHEMICALS INTO THE STORM DRAIN SYSTEM OR THE WATER SHED IS PROHIBITED.
47. PERMITTEE SHALL MAINTAIN CONSTRUCTION SITE IN SUCH A CONDITION THAT AN ANTICIPATED STORM DOES NOT CARRY WASTES OR POLLUTANTS OFF THE SITE. POTENTIAL POLLUTANTS INCLUDE BUT ARE NOT LIMITED TO: SOLID OR LIQUID CHEMICAL SPILLS; WASTE FROM PAINTS, STAINS, SEALANTS, GLUES, LIMES, PESTICIDES, HERBICIDES, WOOD PRESERVATIVES AND SOLVENTS; ASBESTOS FIBERS, PAINT FLAKES OR STUCCO FRAGMENTS; FUELS, OILS, LUBRICANTS, AND HYDRAULIC, RADIATOR OR BATTERY FLUIDS: FERTILIZERS, VEHICLE/EQUIPMENT WASH WATER AND CONCRETE WASH WATER; CONCRETE, DETERGENT OR FLOATABLE WASTES; WASTES FROM ANY ENGINE/EQUIPMENT STEAM CLEANING OR CHEMICAL DEGREASING AND SUPER CHLORINATED POTABLE WATER LINE FLUSHING. DURING CONSTRUCTION PERMITTEE SHALL DISPOSE OF SUCH MATERIALS IN A SPECIFIED AND CONTROLLED TEMPORARY AREA ON-SITE, PHYSICALLY SEPARATED FROM POTENTIAL STORM WATER RUNOFF, ULTIMATE DISPOSAL IN ACCORDANCE WITH LOCAL, STATE AND FEDERAL REQUIREMENTS.
48. PERMITTEE MAY DISCHARGE MATERIAL OTHER THAN STORM WATER ONLY WHEN NECESSARY FOR PERFORMANCE AND COMPLETION OF CONSTRUCTION PRACTICES AND WHERE THEY DO NOT: CAUSE POLLUTION, CONTAMINATION, OR NUISANCE; OR CONTAIN A HAZARDOUS SUBSTANCE IN A QUANTITY REPORTABLE UNDER FEDERAL REGULATIONS 41 CFR PARTS 117 AND 302.
49. DEWATERING OF CONTAMINATED GROUNDWATER, OR DISCHARGING CONTAMINATED SOILS VIA SURFACE EROSION IS PROHIBITED. DEWATERING ON NON-CONTAMINATED GROUNDWATER REQUIRES A NATIONAL POLLUTANT DISCHARGE ELIMINATION SYSTEM PERMIT FROM THE RESPECTIVE STATE REGIONAL WATER QUALITY CONTROL BOARD.

SPECIAL NOTE

"SURVEY MONUMENTS SHALL BE PRESERVED AND REFERENCED BEFORE CONSTRUCTION AND REPLACED AFTER CONSTRUCTION PURSUANT TO SECTION 8771 OF THE BUSINESS AND PROFESSION CODE".

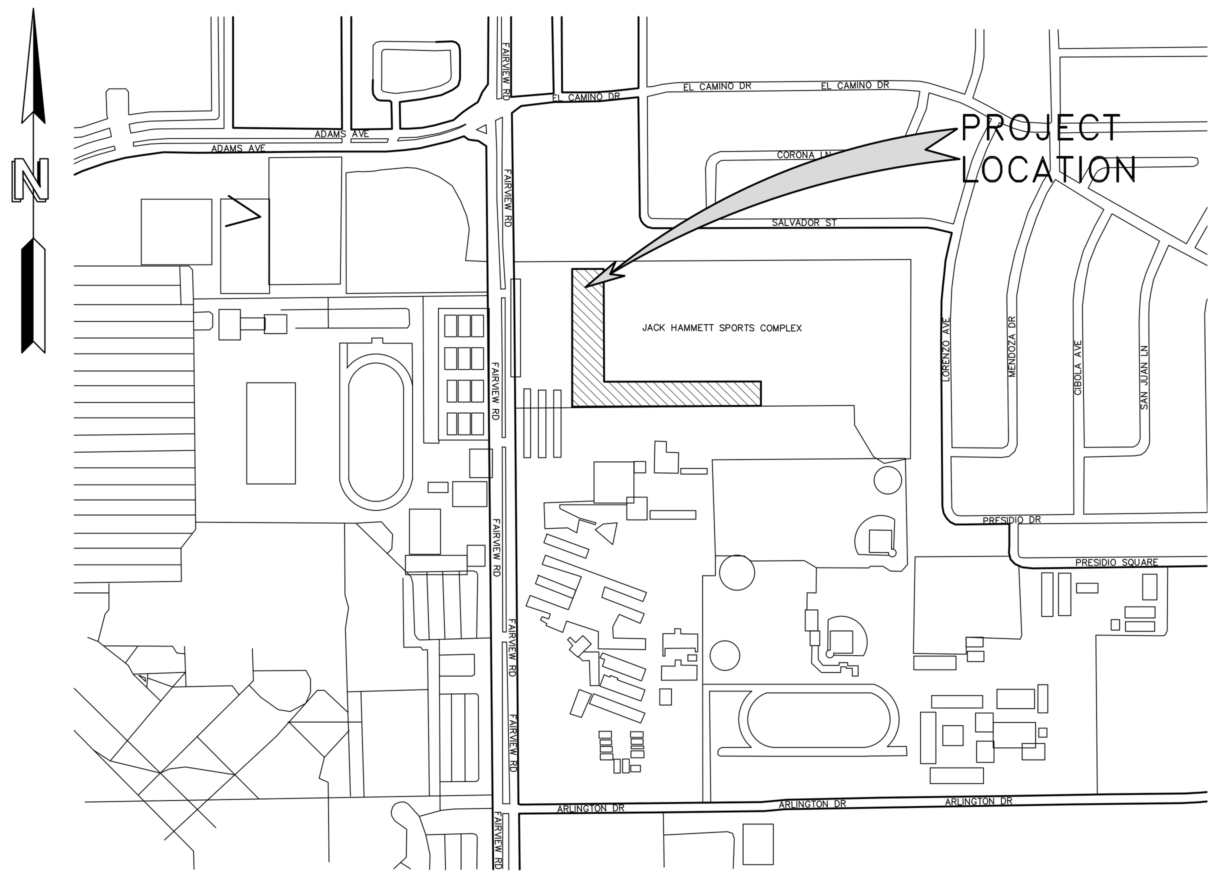

VICINITY MAP
NTS

GENERAL NOTES

1. ALL WORK, LABOR AND MATERIALS SHALL BE IN CONFORMITY WITH THE STANDARD SPECIFICATIONS FOR PUBLIC WORKS CONSTRUCTION, (SPPWC) LATEST EDITION AND STANDARD DRAWINGS OF THE CITY OF COSTA MESA, (LATEST EDITION); THESE PLANS, THE PROJECT CONSTRUCTION DOCUMENTS; AND ALL SAFETY REGULATIONS, CODES, AND REQUIREMENTS PERTINENT TO THE PROJECT CONSTRUCTION.
2. THE CONTRACTOR SHALL MAINTAIN TRAFFIC IN CONFORMANCE WITH THE PROJECT CONSTRUCTION DOCUMENTS AND SHALL PROVIDE 24 HOUR SERVICE TO REMOVE, INSTALL, RELOCATE, AND MAINTAIN TRAFFIC DEVICES PER WATCH MANUAL AND MUTCD LATEST EDITION.
3. LOCATIONS OF EXISTING UTILITIES SHOWN ON THE PLANS ARE BASED ON INFORMATION RECEIVED FROM THE VARIOUS UTILITY COMPANIES, LOCAL AGENCIES AND FIELD INVESTIGATIONS. THE CONTRACTOR IS ADVISED THAT LOCATIONS SHOWN ARE APPROXIMATE, AND EXTREME CAUTION IS REQUIRED TO PROTECT THE EXISTING FACILITIES. THE CONTRACTOR SHALL NOTIFY UNDERGROUND SERVICE ALERT BEFORE DIGGING BY CALLING 811.
4. AT NO TIME IS ANY RESIDENT TO BE WITHOUT ANY ACCESS UNLESS OTHERWISE APPROVED.
5. THE CONTRACTOR SHALL NOTIFY THE ENGINEERING DIVISION, TWO WORKING DAYS PRIOR TO THE START OF CONSTRUCTION AT (714) 754-5323.
6. IF DISCREPANCIES AND/OR DEVIATIONS ARISE DURING CONSTRUCTION, THE ENGINEER WILL DETERMINE AN ACCEPTABLE SOLUTION AND REVISE THE PLANS FOR APPROVAL BY THE CITY ENGINEER.
7. THE CONTRACTOR SHALL BE RESPONSIBLE FOR ALL DAMAGES TO ONSITE, OFFSITE AND ADJACENT UTILITIES, FACILITIES, AND PROPERTIES. ALL PROPERTY CORNERS SHALL BE CLEARLY DELINEATED IN THE FIELD PRIOR TO ANY CONSTRUCTION/GRADING.
8. THE CONTRACTOR SHALL TAKE ALL NECESSARY AND PROPER PRECAUTIONS TO PROTECT ADJACENT PROPERTY OWNERS FROM ANY AND ALL DAMAGES THAT MAY OCCUR FROM STORMWATER RUNOFF AND/OR DEPOSITION OF DEBRIS RESULTING FROM ANY AND ALL WORK IN CONJUNCTION WITH CONSTRUCTION OF THESE IMPROVEMENTS.
9. ALL SURVEY MONUMENTS SHALL NOT BE DISTURBED BY THE CONSTRUCTION OF THIS PROJECT, AND THE CONTRACTOR SHALL BE RESPONSIBLE FOR THE RESTORATION OF ALL LOST OR OBLITERATED MONUMENTS, AS SPECIFIED BY THE SUBDIVISION MAP ACT.
10. THE CONTRACTOR SHALL OBTAIN ALL PERMITS AS REQUIRED FROM CITY OF COSTA MESA AND APPLICABLE GOVERNMENTAL AGENCIES BEFORE CONSTRUCTION STARTS. ALL WORK UNDER THIS GRADING PLAN SHALL BE LIMITED TO WORK WITHIN PROPERTY LINES. ALL WORK WITHIN ROAD RIGHT OF WAY WILL REQUIRE SEPARATE PLANS AND AN ENCROACHMENT PERMIT.
11. CONTRACTOR SHALL VERIFY EXISTING CONDITIONS AND ELEVATIONS PRIOR TO ANY CONSTRUCTION AND SHALL INFORM THE ENGINEER OF ANY CONFLICTS.
12. COORDINATION NOTE: CONTRACTOR IS RESPONSIBLE TO COORDINATE TIMING OF CONSTRUCTION WITH THE PROPERTY OWNERS AND THE ENGINEER.

PRIVATE ENGINEER'S NOTICE TO CONTRACTOR

1. PRIOR TO COMMENCING CONSTRUCTION, THE CONTRACTOR SHALL VERIFY ALL JOIN CONDITIONS FOR GRADING, DRAINAGE AND UNDERGROUND FACILITIES INCLUDING THE LOCATION AND ELEVATION OF EXISTING UNDERGROUND FACILITIES AT THE CROSSING WITH PROPOSED UNDERGROUND FACILITIES. IF THE CONDITIONS DIFFER FROM THOSE SHOWN ON THE PLANS, THE CONTRACTOR SHALL NOTIFY THE ENGINEER AND SHALL NOT BEGIN THE CONSTRUCTION UNTIL THE CHANGED CONDITIONS HAVE BEEN EVALUATED.
2. THE EXISTENCE, LOCATION AND CHARACTERISTICS OF UNDERGROUND UTILITY INFORMATION SHOWN ON THESE PLANS HAS BEEN OBTAINED FROM A REVIEW OF AVAILABLE DATA. NO REPRESENTATION IS MADE AS TO ACCURACY OR COMPLETENESS OF SAID UTILITY INFORMATION. THE CONTRACTOR SHALL TAKE PRECAUTIONARY MEASURES TO PROTECT THE UTILITY LINE SHOWN AND ANY OTHER LINES NOT OF RECORD OR NOT SHOWN ON THESE PLANS.
3. THE CONTRACTOR SHALL ASSUME SOLE AND COMPLETE RESPONSIBILITY FOR THE JOB SITE CONDITIONS INCLUDING SAFETY OF ALL PERSONS AND PROPERTY, DURING THE COURSE OF CONSTRUCTION OF THIS PROJECT. THIS REQUIREMENT SHALL APPLY CONTINUOUSLY, AND SHALL NOT BE LIMITED TO NORMAL WORKING HOURS. THE CONTRACTOR SHALL DEFEND, INDEMNIFY AND HOLD THE OWNER AND THE ENGINEER HARMLESS FROM ANY AND ALL LIABILITY, REAL OR ALLEGED, IN CONNECTION WITH PERFORMANCE OF WORK ON THIS PROJECT.
4. THE CONTRACTOR SHALL FAMILIARIZE HIMSELF WITH THE PLANS, THE SOILS AND/OR GEOLOGY REPORTS AND THE SITE CONDITIONS PRIOR TO COMMENCING WORK.
5. SHOULD CONFLICTING INFORMATION BE FOUND ON THE PLANS, THE CONTRACTOR SHALL NOTIFY THE ENGINEER BEFORE PROCEEDING WITH THE WORK IN QUESTION.

THE CONTRACTOR AGREES THAT IN ACCORDANCE WITH GENERALLY ACCEPTED CONSTRUCTION PRACTICES, THE CONTRACTOR WILL BE REQUIRED TO ASSUME SOLE AND COMPLETE RESPONSIBILITY FOR JOB SITE CONDITIONS DURING THE CONSTRUCTION OF THE PROJECT, INCLUDING THE SAFETY OF ALL PERSONS AND PROPERTIES, THAT THESE REQUIREMENTS SHALL BE APPLIED CONTINUOUSLY AND NOT BE LIMITED TO NORMAL WORKING HOURS, AND THE CONTRACTOR FURTHER AGREES TO DEFEND, INDEMNIFY, AND PROTECT THE DESIGN PROFESSIONAL AGAINST ALL REAL OR ALLEGED CLAIMS IN CONNECTION WITH THE PERFORMANCE OF WORK ON THIS PROJECT, EXCEPTING LIABILITIES ARISING FROM THE SOLE NEGLIGENCE OF THE DESIGN PROFESSIONAL. UNAUTHORIZED CHANGES AND USES: THE ENGINEER PREPARING THESE PLANS WILL NOT BE RESPONSIBLE FOR, OR LIABLE FOR, UNAUTHORIZED CHANGES TO OR USE OF THESE PLANS. ALL CHANGES TO THE PLANS MUST BE IN WRITING AND MUST BE APPROVED BY THE PREPARER OF THESE PLANS.

NPDES NOTES:

1. CONSTRUCTION SITE BEST MANAGEMENT PRACTICES (BMPS) FOR THE MANAGEMENT OF STORMWATER AND NON-STORMWATER DISCHARGES SHALL BE DOCUMENTED ON THE GRADING PLAN. ARRANGEMENTS SHALL BE MADE BY THE CONTRACTOR TO RETAIN THE SWPPP ON THE JOBSITE THROUGHOUT THE TIME OF CONSTRUCTION. THE IMPLEMENTATION AND MAINTENANCE OF SITE BMPS (IF REQUIRED) TO MINIMIZE JOBSITE EROSION AND SEDIMENTATION. CERTAIN BMPS MAY BE REQUIRED TO REMAIN IN PLACE THROUGHOUT THE YEAR TO MINIMIZE EROSION AND SEDIMENTATION ARRANGEMENTS SHALL BE MADE BY THE CONTRACTOR TO MAINTAIN THOSE BMPS THROUGHOUT THE TIME OF CONSTRUCTION.
2. EROSION CONTROL BMPS SHALL BE IMPLEMENTED AND MAINTAINED TO MINIMIZE THE ENTRAINMENT OF SOIL IN RUNOFF FROM DISTURBED SOIL AREAS ON CONSTRUCTION SITES.
3. SEDIMENTS CONTROL BMPS SHALL BE IMPLEMENTED AND MAINTAINED TO MINIMIZE THE TRANSPORT OF SOIL FROM THE CONSTRUCTION SITE.
4. GRADING SHALL BE PHASED TO LIMIT THE AMOUNT OF DISTURBED AREAS EXPOSED TO THE EXTENT FEASIBLE.
5. AREAS THAT ARE CLEARED AND GRADED SHALL BE LIMITED TO ONLY THE PORTION OF THE SITE THAT IS NECESSARY FOR CONSTRUCTION. THE CONSTRUCTION SITE SHALL BE MANAGED TO MINIMIZE THE EXPOSURE TIME OF DISTURBED SOIL AREAS THROUGH PHASING AND SCHEDULING OF GRADING AND THE USE OF TEMPORARY AND PERMANENT SOIL STABILIZATION.
6. ONCE DISTURBED, SLOPES (TEMPORARY OR PERMANENT) SHALL BE STABILIZED IF THEY WILL NOT BE WORKED WITHIN 14 DAYS. ALL SLOPES SHALL BE STABILIZED PRIOR TO A PREDICTED STORM EVENT. CONSTRUCTION SITES SHALL BE REVEGETATED AS EARLY AS FEASIBLE AFTER SOIL DISTURBANCE.
7. STOCKPILES OF SOIL SHALL BE PROPERLY CONTAINED TO ELIMINATE OR REDUCE SEDIMENT TRANSPORT FROM THE SITE TO STREETS, DRAINAGE FACILITIES OR ADJACENT PROPERTIES VIA RUNOFF, VEHICLE TRACKING, OR WIND.
8. CONSTRUCTION SITES SHALL BE MAINTAINED IN SUCH A CONDITION THAT A STORM DOES NOT CARRY WASTES OR POLLUTANTS OFF THE SITE. DISCHARGES OTHER THAN STORMWATER (NON-STORMWATER DISCHARGES) ARE PROHIBITED, EXCEPT AS AUTHORIZED BY AN INDIVIDUAL NPDES PERMIT, THE STATEWIDE GENERAL PERMIT-CONSTRUCTION ACTIVITY. POTENTIAL POLLUTANTS INCLUDE BUT ARE NOT LIMITED TO: SOLID OR LIQUID CHEMICAL SPILLS; WASTES FROM PAINTS STAINS, SEALANTS, SOLVENTS, DETERGENTS, GLUES, LIME, PESTICIDES, HERBICIDES, FERTILIZERS, WOOD PRESERVATIVES, AND ASBESTOS FIBERS, PAINT FLAKES OR STUCCO FRAGMENTS; FUELS, OILS, LUBRICANTS, AND HYDRAULIC, RADIATOR OR BATTERY FLUIDS; CONCRETE AND RELATED CUTTING OR CURING RESIDUES; FLOATABLE WASTES; WASTES FROM ENGINE/EQUIPMENT STEAM CLEANING OR CHEMICAL DEGREASING; WASTES FORM STREET CLEANING; AND SUPER-CHLORINATED POTABLE WATER FROM LINE FLUSHING AND TESTING. DURING CONSTRUCTION, DISPOSAL OF SUCH MATERIALS SHOULD OCCUR IN A SPECIFIED AND CONTROLLED TEMPORARY AREA ON-SITE PHYSICALLY SEPARATED FROM POTENTIAL STORMWATER RUNOFF, WITH ULTIMATE DISPOSAL IN ACCORDANCE WITH LOCAL, STATE AND FEDERAL REQUIREMENTS.
9. RUNOFF FROM EQUIPMENT AND VEHICLE WASHING SHALL BE CONTAINED AT CONSTRUCTION SITE AND MUST NOT BE DISCHARGED TO RECEIVING WATERS OR THE LOCAL STORM DRAIN SYSTEM.
10. APPROPRIATE BMPS FOR CONSTRUCTION-RELATED MATERIALS, WASTES, SPILLS OR RESIDUES SHALL BE IMPLEMENTED TO ELIMINATE OR REDUCE TRANSPORT FROM THE SITE TO STREETS, DRAINAGE FACILITIES, OR ADJOINING PROPERTIES BY WIND OR RUNOFF.
11. ALL CONSTRUCTION CONTRACTORS AND SUBCONTRACTOR PERSONNEL ARE TO BE MADE AWARE OF THE REQUIRED BMPS AND GOOD HOUSEKEEPING MEASURES FOR THE PROJECT SITE AND ANY ASSOCIATED CONSTRUCTION STAGING AREAS.
12. DISCHARGING CONTAMINATED GROUNDWATER PRODUCED BY DEWATERING GROUNDWATER THAT HAS INFILTRATED INTO THE CONSTRUCTION SITE IS PROHIBITED. DISCHARGING OF CONTAMINATED SOILS VIA SURFACE EROSION IS ALSO PROHIBITED. DISCHARGING NON-CONTAMINATED GROUNDWATER PRODUCED BY DEWATERING ACTIVITIES MAY REQUIRE A NATIONAL POLLUTANT DISCHARGE ELIMINATION SYSTEM (NPDES) PERMIT FROM THE REGIONAL WATER QUALITY CONTROL BOARD.
13. BMPS SHALL BE MAINTAINED AT ALL TIMES. IN ADDITION, BMPS SHALL BE INSPECTED PRIOR TO PREDICTED STORM EVENTS AND FOLLOWING STORM EVENTS.
14. AT THE END OF EACH DAY OF CONSTRUCTION ACTIVITY, ALL CONSTRUCTION DEBRIS AND WASTE MATERIALS SHALL BE COLLECTED AND PROPERLY DISPOSED OF IN TRASH OR RECYCLE BINS.

SCOPE OF WORK

"SCOPE OF WORK IN GENERAL IS LIMITED TO NEW STORAGE BUILDING, SLURRY SEAL, CURB, GUTTERS, SIDEWALKS, DRIVEWAYS, ASPHALT PAVING, AND PAVEMENT MARKINGS".

CALL THE FOLLOWING UTILITY AGENCIES
(2) WORKING DAYS PRIOR TO EXCAVATION

PUBLIC UTILITY AGENCY

SOUTHERN CALIFORNIA GAS CO. MR. DAVID BALDWIN	(714) 634-3367	IRWD LLC MALCOM CORTEZ	(949) 453-5515
SOUTHERN CALIFORNIA GAS CO. TRANS MS. ROSALYN SQUIRES	(818) 701-4546	VERIZON BUSINESS BRYAN CHURCH	(636) 430-4572
SOUTHERN CALIFORNIA EDISON COMPANY MR. JEFF GILBERT	(714) 895-0363	ORANGE COUNTY WATER DISTRICT CHUCK STEINBERGS	(714) 378-3229
MESA CONSOLIDATED WATER DISTRICT MR. MARK PELKA	(949) 631-1200	M POWER COMMUNICATIONS INC. MR. MARK DENNING	(949) 864-0296
COSTA MESA SANITARY DISTRICT MR. ROBIN HAMERS	(949) 631-1731	TIME WARNER MR. JOE BARRIOS	(714) 903-8337
AT&T TELEPHONE MR. CRAIG AKIN	(714) 237-6165	METROPOLITAN WATER DIST. OF SO. CA MR. KIERAN CALLAHAN	(213) 217-7474
XO COMMUNICATIONS MR. STEWART McCAUSLAND	(949) 417-7762	OCTA / BUS SERVICES MR. MARK STRICKERT	(714) 560-5883
COUNTY SANITATION DISTRICTS OF O.C. MS. LYNN ELLIOTT	(714) 593-7333		

BENCH MARK:

ELEVATIONS SHOWN HEREON ARE BASED UPON THE ORANGE COUNTY VERTICAL CONTROL BENCH MARK 1F-174-04, ELEVATION 81.69 FEET (NAVD 88).

3 3/4" O.C.S. ALUMINUM DISK STAMPED "1F-174-04", IN THE SOUTHWESTERLY CORNER OF A 4' BY 8' CONCRETE CATCH BASIN.

IN THE SOUTHWESTERLY CORNER OF THE INTERSECTION OF HARBOR BOULEVARD AND VICTORIA STREET, 77 FT. SOUTHERLY OF THE CENTERLINE OF VICTORIA AND 41 FT. WESTERLY OF THE CENTERLINE OF HARBOR BOULEVARD. MONUMENT IS SET LEVEL WITH THE SIDEWALK.

BASIS OF BEARINGS:

THE BASIS OF BEARING FOR THIS SURVEY IS THE CALIFORNIA COORDINATES SYSTEM (CCS 83), ZONE 6, 1983 DATUM, DEFINED BY SECTIONS 8801 TO 8819 OF THE CALIFORNIA PUBLIC RESOURCES CODE.

SURVEY

CALVADA SURVEYING, INC.
411 JENKS CIRCLE, SUITE 2015,
CORONA, CA 92880

PHONE: (951) 280-9960

PREPARED BY: ARMANDO D. DUPONT
REGISTRATION NO. 7780
STATE OF CALIFORNIA

GEOTECH

WILDAN GEOTECHNICAL
1515 S. SUNKIST STREET, SUITE E,
ANAHEIM, CA 92806

PHONE: (714) 634-3372

REPORT PROJECT NO. 106059-2000
MARCH 14, 2016

PREPARED BY: ROSS KHIABANI
P.E. 37156, G.E. 2202
STATE OF CALIFORNIA

LEGEND / SYMBOLS

CB	CATCH BASIN
CBC	CALIFORNIA BUILDING CODE
CF	CURB FACE
C&G	CURB & GUTTER
CL	CENTERLINE
CMB	CRUSHED MISCELLANEOUS BASE
CONC	CONCRETE
DIA	DIAMETER
DWG	DRAWING
ELEC	ELECTRIC
EX	EXISTING
EXIST	EXISTING
FL	FLOWLINE
FS	FINISHED SURFACE
G	GAS LINE
GB	GRADE BREAK
LP	LIGHT POLE
M	MONUMENT
MISC	MISCELLANEOUS
O.C.	ON CENTER
OCSD	ORANGE COUNTY SANITATION DISTRICT
PB	PULL BOX
PP	POWER POLE
PVMT	PAVEMENT
SW	SIDEWALK
SMH	SEWER MANHOLE
STD	STANDARD
TBM	TEMPORARY BENCH MARK
TC	TOP OF CURB
TYP	TYPICAL

FIRE HYDRANT
GM GAS METER
GV GAS VALVE
GA GUY ANCHOR
GUY POLE
—SS— SANITARY SEWER LINE
SEWER MANHOLE
STORM DRAIN MANHOLE
UTILITY POLE
WM WATER METER
WV WATER VALVE
—W— WATER LINE
—x—x— CHAINLINK FENCE

A.C. RECONSTRUCTION
CONCRETE
A.C. REMOVAL
SLURRY SEAL
CONCRETE REMOVAL
LANDSCAPE REMOVAL/EXCAVATION

INDEX OF DRAWINGS

SHEET NO.	PLAN NO.	DESCRIPTION
1 OF 41	C.1	TITLE SHEET
2 OF 41	C.2	SECTIONS AND DETAILS
3 OF 41	C.3	DEMOLITION PLAN
4 OF 41	C.4	PARKING LOT GRADING PLAN/IMPROVEMENT PLAN
5 OF 41	C.5	PARKING LOT GRADING PLAN/IMPROVEMENT PLAN
6 OF 41	C.6	EROSION CONTROL PLAN
7 OF 41	C.7	HORIZONTAL CONTROL PLAN
8 OF 41	LC.1	CONSTRUCTION PLAN
9 OF 41	LC.2	CONSTRUCTION PLAN
10 OF 41	CD.1	CONSTRUCTION DETAILS
11 OF 41	CD.2	CONSTRUCTION DETAILS
12 OF 41	CD.3	CONSTRUCTION DETAILS
13 OF 41	LI.1	IRRIGATION PLAN
14 OF 41	LI.2	IRRIGATION PLAN & NOTES
15 OF 41	LI.3	IRRIGATION DETAILS
16 OF 41	LI.4	IRRIGATION DETAILS
17 OF 41	LP.1	PLANTING PLAN
18 OF 41	LP.2	PLANTING PLAN, NOTES & DETAILS
19 OF 41	AI.0	ARCHITECTURAL NOTES
20 OF 41	A1.1	ACCESSIBILITY NOTES
21 OF 41	A2.0	FLOOR AND ROOF PLANS (STORAGE BLDG. NO.1)
22 OF 41	A2.1	ARCHITECTURAL DETAILS
23 OF 41	A2.2	ARCHITECTURAL SCHEDULES AND DETAILS
24 OF 41	A3.0	EXTERIOR ELEVATIONS AND SECTIONS (STORAGE BLDG. NO.1)
25 OF 41	SN-1	GENERAL NOTES
26 OF 41	SN-2	STRUCTURAL OBSERVATION/SPECIAL INSPECTION
27 OF 41	ST-1	TYPICAL CONCRETE DETAILS
28 OF 41	ST-2	TYPICAL WOOD DETAILS
29 OF 41	S-1	FOUNDATION PLANS
30 OF 41	S-2	ROOF FRAMING PLANS
31 OF 41	SD-1	DETAILS
32 OF 41	E-0.1	ELECTRICAL LEGEND & NOTES
33 OF 41	E-0.2	LUMINAIRE SCHEDULE
34 OF 41	E-0.3	TITLE 24 COMPLIANCE DOCUMENTS
35 OF 41	E-0.4	SINGLE LINE DIAGRAM & PANEL SCHEDULES
36 OF 41	E-1.1	PARTIAL ELECTRICAL SITE PLAN
37 OF 41	E-1.2	PARTIAL ELECTRICAL SITE PLAN
38 OF 41	E-1.3	PARTIAL PHOTOMETRIC PLAN
39 OF 41	E-1.4	PARTIAL PHOTOMETRIC PLAN
40 OF 41	E-2.1	POWER & LTG FLOOR PLAN-STORAGE #1
41 OF 41	E-4.1	ELECTRICAL DETAILS

Landscape Architect:

David Volz Design
Landscape Architecture & Park Planning

Costa Mesa Office:
151 Kalmus Drive, Suite M8
Costa Mesa, CA 92626
Phone: (714) 641-1300
Fax: (714) 641-1323

e-mail: drawings@dvolzdesign.com
www.dvolzdesign.com

Subconsultant:

NV5
163 TECHNOLOGY DR
SUITE 100
IRVINE, CA 92618
TEL. (949) 585-0477
FAX. (949) 585-0433
WWW.NV5.COM

Seal:
REGISTERED PROFESSIONAL ENGINEER
DAVID NIKNAFS
No. 42697
CIVIL
STATE OF CALIFORNIA

CALL TOLL FREE
811
DIGALERT
UNDERGROUND SERVICE ALERT OF SOUTHERN CALIFORNIA

ATTENTION IS DIRECTED TO THE POSSIBLE EXISTENCE OF UNDERGROUND FACILITIES NOT KNOWN OR IN A LOCATION DIFFERENT FROM THAT WHICH IS SHOWN ON THE PLANS OR IN THE SPECIAL PROVISIONS. THE CONTRACTOR SHALL TAKE STEPS TO ASCERTAIN THE EXACT LOCATION OF ALL UNDERGROUND FACILITIES PRIOR TO DOING WORK THAT MAY DAMAGE SUCH FACILITIES OR INTERFERE WITH THEIR SERVICE.

BEFORE EXCAVATING, THE CONTRACTOR SHALL VERIFY THE LOCATION OF UNDERGROUND UTILITIES BY CONTRACTING UNDERGROUND SERVICE ALERT. CALL TOLL FREE 811.

Revisions:

No.	Date	Revisions	By

Project :
JACK HAMMETT SPORTS COMPLEX
PARKING LOT IMPROVEMENTS

Owner:
City of Costa Mesa

Project No :	19-15
Drawn By :	AB
Checked By :	DN
Date :	AUG 2021
Scale :	AS SHOWN

Drawing Title :
TITLE SHEET

Drawing No :
C.1

SHEET 1 OF 41

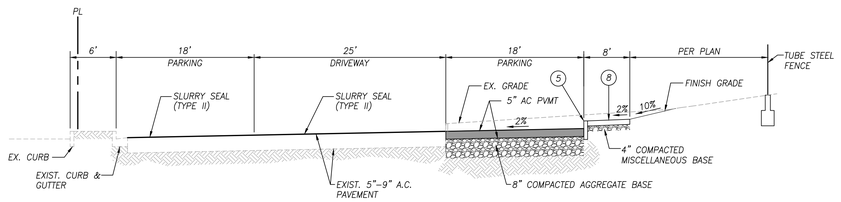

SECTION A-A
NTS

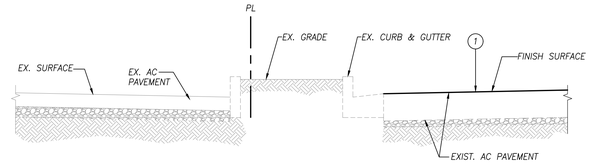

SECTION B-B
NTS

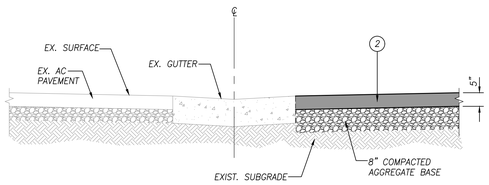

SECTION C-C
NTS

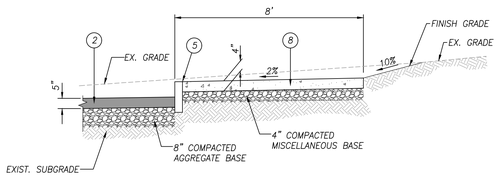

SECTION D-D
NTS

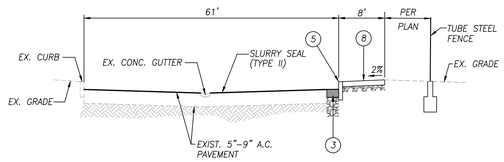

SECTION E-E
NTS

CONSTRUCTION NOTES

1. WEED ABATE, CRACK SEAL, REMOVE EXISTING STRIPING & PAVEMENT MARKINGS AND CONSTRUCT SLURRY SEAL TYPE II.
2. CONSTRUCT 5" A.C. PAVEMENT OVER 8" COMPACTED AGGREGATE BASE PER APPROVAL BY THE CITY OF COSTA MESA.
3. SAWCUT & REMOVE FULL DEPTH OF EXISTING AC PAVEMENT AND CONSTRUCT SLOT PAVEMENT 5" OVER 8" COMPACTED AGGREGATE BASE PER DETAIL A ON SHEET C.2.
5. CONSTRUCT 6" CURB, TYPE A1-6(150) PER SPPWC STD PLAN 120-2.
8. CONSTRUCT CONCRETE SIDEWALK PER LANDSCAPE PLAN AND PER CITY OF COSTA MESA STD. DWG. NO.411 (RUNNING SLOPE MAX 5% AND CROSS SLOPE MAX. 2%).

DISPOSITION NOTES

M MATCH/JOIN EXISTING

P PROTECT IN PLACE

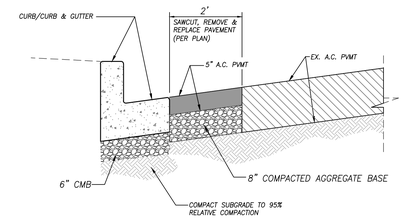

A CURB AND GUTTER / SLOT A.C. PAVING DETAIL
NTS

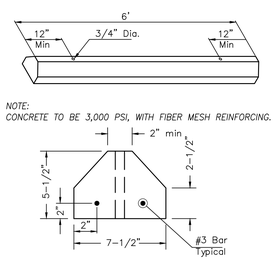

B CONCRETE WHEEL STOP
NTS

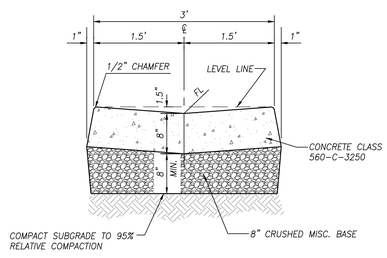

C CONCRETE V-GUTTER DETAIL
NTS

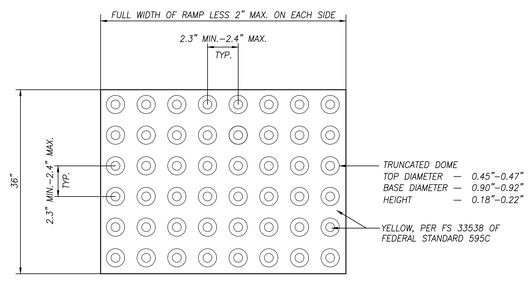

D TRUNCATED DOME DETAIL
NTS

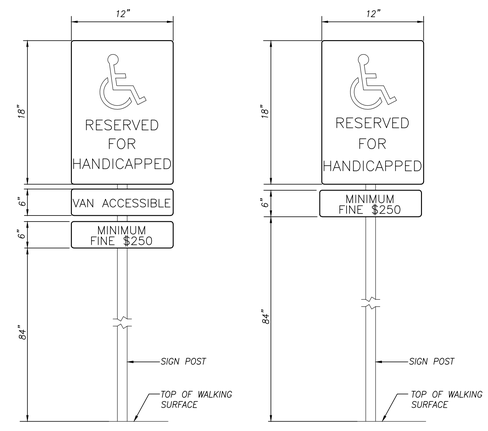

E PARKING SPACE IDENTIFICATION SIGN
NTS

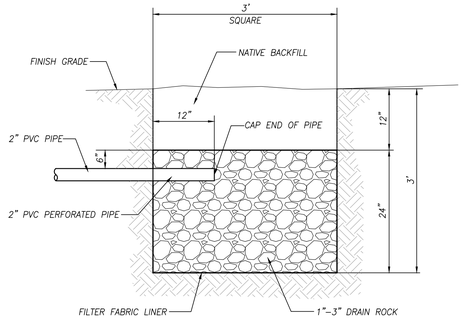

F DRY WELL DETAIL
NTS

Landscape Architect:

David Volz Design
Landscape Architecture & Park Planning

Costa Mesa Office:
151 Kalmus Drive, Suite M8
Costa Mesa, CA 92626
Phone: (714) 641-1300
Fax: (714) 641-1323

e-mail: drawings@dvolzdesign.com
www.dvolzdesign.com

Subconsultant:

NV5
163 TECHNOLOGY DR
SUITE 100
IRVINE, CA 92618
TEL. (949) 585-0477
FAX. (949) 585-0433
WWW.NV5.COM

Seal:

REGISTERED PROFESSIONAL ENGINEER
DAVID NIKNAFS
No. 42697
CIVIL
STATE OF CALIFORNIA

CALL TOLL FREE
811
DIGALERT

UNDERGROUND SERVICE ALERT OF SOUTHERN CALIFORNIA

ATTENTION IS DIRECTED TO THE POSSIBLE EXISTENCE OF UNDERGROUND FACILITIES NOT KNOWN OR IN A LOCATION DIFFERENT FROM THAT ILLUSTRATED ON THE PLANS OR IN THE SPECIAL PROVISIONS. THE CONTRACTOR SHALL TAKE STEPS TO ASCERTAIN THE EXACT LOCATION OF ALL UNDERGROUND FACILITIES PRIOR TO DOING WORK THAT MAY DAMAGE SUCH FACILITIES OR INTERFERE WITH THEIR SERVICE.

BEFORE EXCAVATING, THE CONTRACTOR SHALL VERIFY THE LOCATION OF UNDERGROUND UTILITIES BY CONTRACTING UNDERGROUND SERVICE ALERT, CALL TOLL FREE 811.

Revisions:

No.	Date	Revisions	By

Project :
JACK HAMMETT SPORTS COMPLEX
PARKING LOT IMPROVEMENTS

Owner:
City of Costa Mesa

Project No :	19-15
Drawn By :	AB
Checked By :	DN
Date :	AUG 2021
Scale :	AS SHOWN

Drawing Title :
DETAILS AND SECTIONS

Drawing No :
C.2

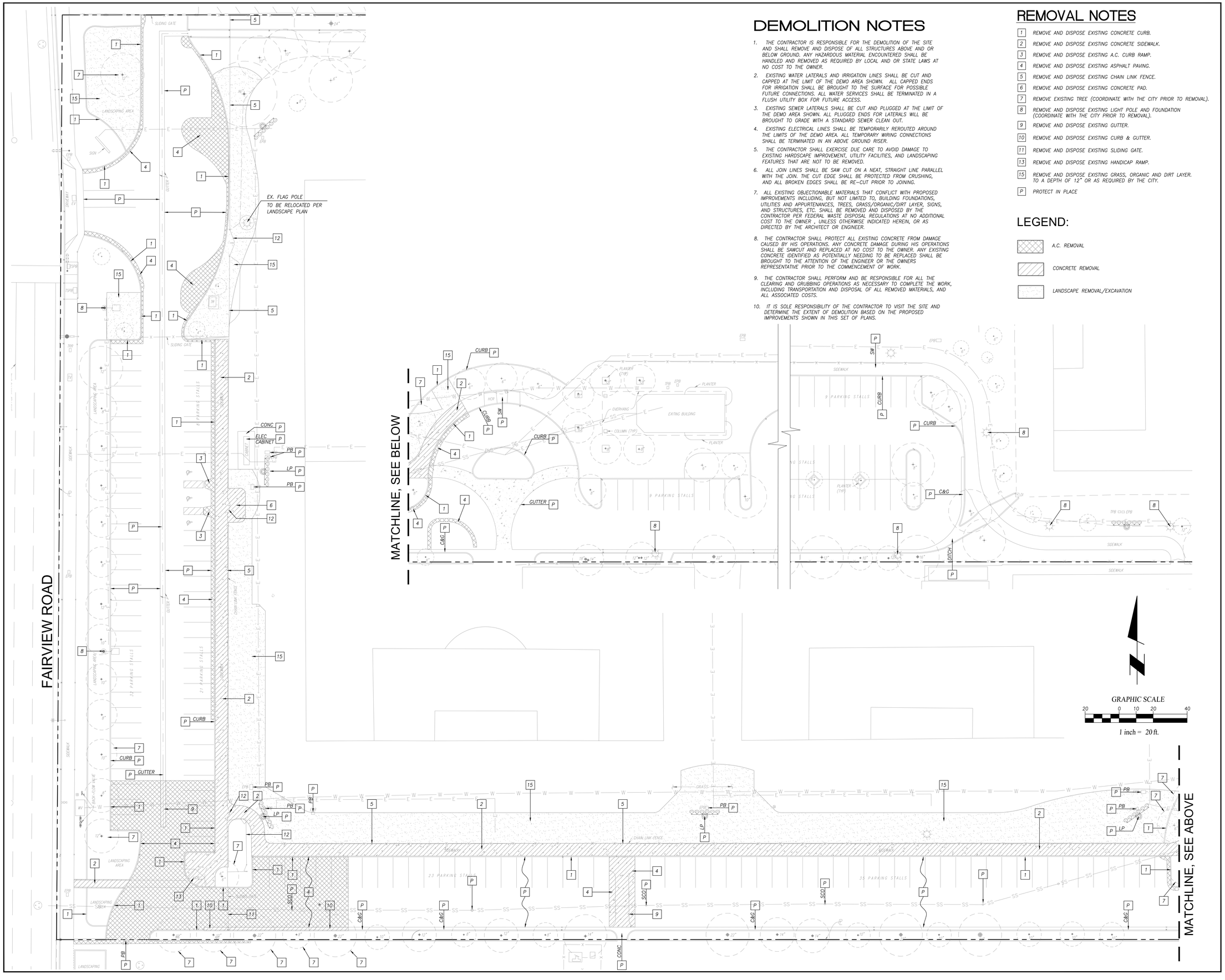

DEMOLITION NOTES

1. THE CONTRACTOR IS RESPONSIBLE FOR THE DEMOLITION OF THE SITE AND SHALL REMOVE AND DISPOSE OF ALL STRUCTURES ABOVE AND OR BELOW GROUND. ANY HAZARDOUS MATERIAL ENCOUNTERED SHALL BE HANDLED AND REMOVED AS REQUIRED BY LOCAL AND OR STATE LAWS AT NO COST TO THE OWNER.
2. EXISTING WATER LATERALS AND IRRIGATION LINES SHALL BE CUT AND CAPPED AT THE LIMIT OF THE DEMO AREA SHOWN. ALL CAPPED ENDS FOR IRRIGATION SHALL BE BROUGHT TO THE SURFACE FOR POSSIBLE FUTURE CONNECTIONS. ALL WATER SERVICES SHALL BE TERMINATED IN A FLUSH UTILITY BOX FOR FUTURE ACCESS.
3. EXISTING SEWER LATERALS SHALL BE CUT AND PLUGGED AT THE LIMIT OF THE DEMO AREA SHOWN. ALL PLUGGED ENDS FOR LATERALS WILL BE BROUGHT TO GRADE WITH A STANDARD SEWER CLEAN OUT.
4. EXISTING ELECTRICAL LINES SHALL BE TEMPORARILY REROUTED AROUND THE LIMITS OF THE DEMO AREA. ALL TEMPORARY WIRING CONNECTIONS SHALL BE TERMINATED IN AN ABOVE GROUND RISER.
5. THE CONTRACTOR SHALL EXERCISE DUE CARE TO AVOID DAMAGE TO EXISTING HARDSCAPE IMPROVEMENT, UTILITY FACILITIES, AND LANDSCAPING FEATURES THAT ARE NOT TO BE REMOVED.
6. ALL JOIN LINES SHALL BE SAW CUT ON A NEAT, STRAIGHT LINE PARALLEL WITH THE JOIN. THE CUT EDGE SHALL BE PROTECTED FROM CRUSHING, AND ALL BROKEN EDGES SHALL BE RE-CUT PRIOR TO JOINING.
7. ALL EXISTING OBJECTIONABLE MATERIALS THAT CONFLICT WITH PROPOSED IMPROVEMENTS INCLUDING, BUT NOT LIMITED TO, BUILDING FOUNDATIONS, UTILITIES AND APPURTENANCES, TREES, GRASS/ORGANIC/DIRT LAYER, SIGNS, AND STRUCTURES, ETC. SHALL BE REMOVED AND DISPOSED BY THE CONTRACTOR PER FEDERAL WASTE DISPOSAL REGULATIONS AT NO ADDITIONAL COST TO THE OWNER , UNLESS OTHERWISE INDICATED HEREIN, OR AS DIRECTED BY THE ARCHITECT OR ENGINEER.
8. THE CONTRACTOR SHALL PROTECT ALL EXISTING CONCRETE FROM DAMAGE CAUSED BY HIS OPERATIONS. ANY CONCRETE DAMAGE DURING HIS OPERATIONS SHALL BE SAWCUT AND REPLACED AT NO COST TO THE OWNER. ANY EXISTING CONCRETE IDENTIFIED AS POTENTIALLY NEEDING TO BE REPLACED SHALL BE BROUGHT TO THE ATTENTION OF THE ENGINEER OR THE OWNERS REPRESENTATIVE PRIOR TO THE COMMENCEMENT OF WORK.
9. THE CONTRACTOR SHALL PERFORM AND BE RESPONSIBLE FOR ALL THE CLEARING AND GRUBBING OPERATIONS AS NECESSARY TO COMPLETE THE WORK, INCLUDING TRANSPORTATION AND DISPOSAL OF ALL REMOVED MATERIALS, AND ALL ASSOCIATED COSTS.
10. IT IS SOLE RESPONSIBILITY OF THE CONTRACTOR TO VISIT THE SITE AND DETERMINE THE EXTENT OF DEMOLITION BASED ON THE PROPOSED IMPROVEMENTS SHOWN IN THIS SET OF PLANS.

REMOVAL NOTES

1	REMOVE AND DISPOSE EXISTING CONCRETE CURB.
2	REMOVE AND DISPOSE EXISTING CONCRETE SIDEWALK.
3	REMOVE AND DISPOSE EXISTING A.C. CURB RAMP.
4	REMOVE AND DISPOSE EXISTING ASPHALT PAVING.
5	REMOVE AND DISPOSE EXISTING CHAIN LINK FENCE.
6	REMOVE AND DISPOSE EXISTING CONCRETE PAD.
7	REMOVE EXISTING TREE (COORDINATE WITH THE CITY PRIOR TO REMOVAL).
8	REMOVE AND DISPOSE EXISTING LIGHT POLE AND FOUNDATION (COORDINATE WITH THE CITY PRIOR TO REMOVAL).
9	REMOVE AND DISPOSE EXISTING GUTTER.
10	REMOVE AND DISPOSE EXISTING CURB & GUTTER.
11	REMOVE AND DISPOSE EXISTING SLIDING GATE.
13	REMOVE AND DISPOSE EXISTING HANDICAP RAMP.
15	REMOVE AND DISPOSE EXISTING GRASS, ORGANIC AND DIRT LAYER. TO A DEPTH OF 12" OR AS REQUIRED BY THE CITY.
P	PROTECT IN PLACE

LEGEND:

A.C. REMOVAL

CONCRETE REMOVAL

LANDSCAPE REMOVAL/EXCAVATION

Landscape Architect:

David Volz Design
Landscape Architecture & Park Planning

Costa Mesa Office:
151 Kalmus Drive, Suite M8
Costa Mesa, CA 92626
Phone: (714) 641-1300
Fax: (714) 641-1323

e-mail: drawings@dvolzdesign.com
www.dvolzdesign.com

Subconsultant:

NV5
WWW.NV5.COM
163 TECHNOLOGY DR
SUITE 100
IRVINE, CA 92618
TEL. (949) 585-0477
FAX. (949) 585-0433

Seal:

REGISTERED PROFESSIONAL ENGINEER
DAVID NIKNAFS
No. 42697
CIVIL
STATE OF CALIFORNIA

CALL TOLL FREE
811
DIGALERT

UNDERGROUND SERVICE ALERT OF SOUTHERN CALIFORNIA

ATTENTION IS DIRECTED TO THE POSSIBLE EXISTENCE OF UNDERGROUND FACILITIES WHICH MAY BE ENCOUNTERED BUT NOT SHOWN OR DIFFERENT FROM THAT WHICH IS SHOWN ON THE PLANS OR IN THE SPECIAL PROVISIONS. THE CONTRACTOR SHALL TAKE STEPS TO ASCERTAIN THE EXACT LOCATION OF ALL UNDERGROUND FACILITIES PRIOR TO DOING WORK THAT MAY DAMAGE SUCH FACILITIES OR INTERFERE WITH THEIR SERVICE.

BEFORE EXCAVATING, THE CONTRACTOR SHALL VERIFY THE LOCATION OF UNDERGROUND UTILITIES BY CONTRACTING UNDERGROUND SERVICE ALERT, CALL TOLL FREE 811.

Revisions:

No.	Date	Revisions	By

Project :
JACK HAMMETT SPORTS COMPLEX
PARKING LOT IMPROVEMENTS

Owner:
City of Costa Mesa

Project No :	19-15
Drawn By :	AB
Checked By :	DN
Date :	AUG 2021
Scale :	AS SHOWN

Drawing Title :

DEMOLITION PLAN

Drawing No :

C.3

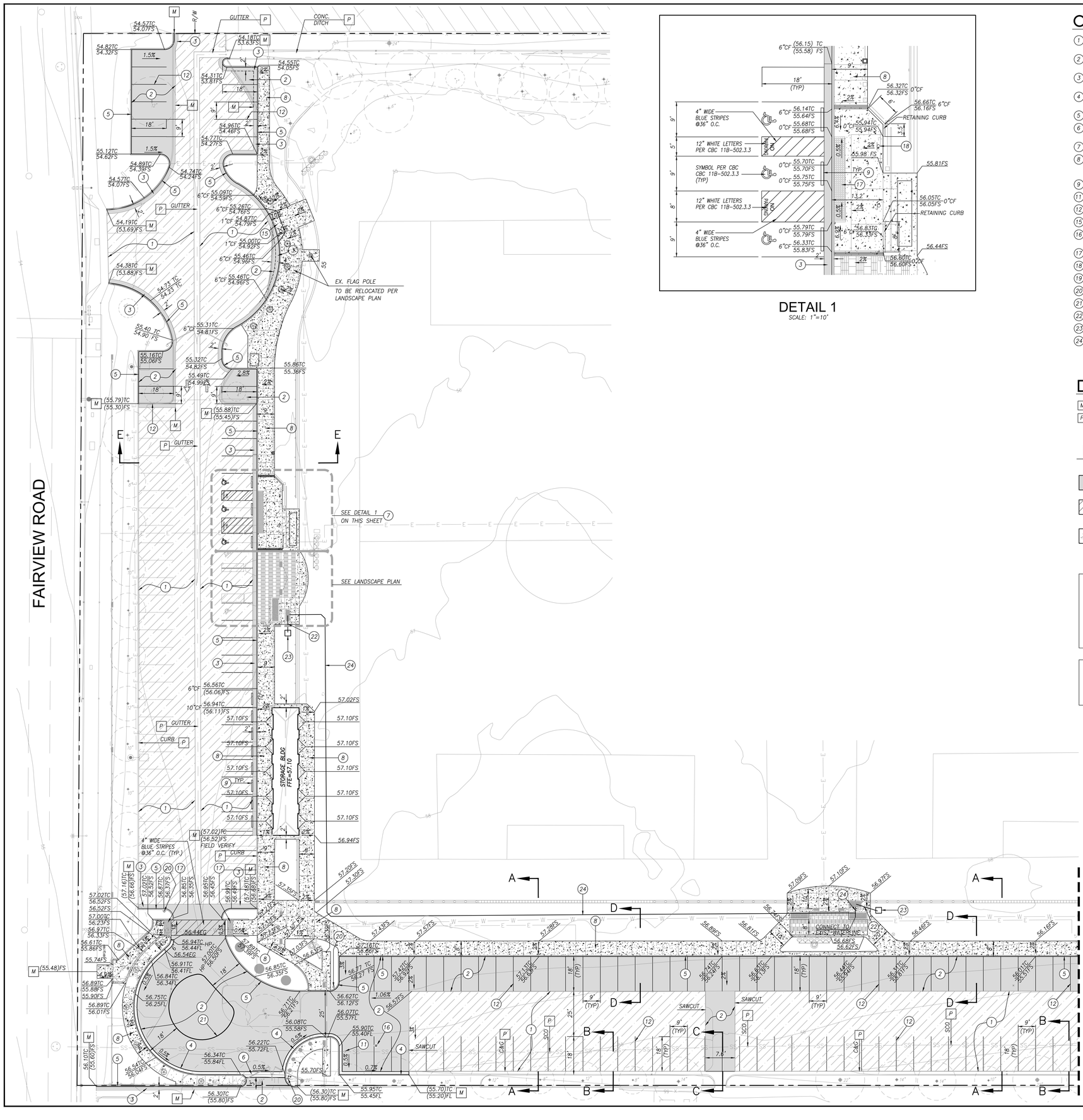

DETAIL 1
SCALE: 1"=10'

CONSTRUCTION NOTES

1. WEED ABATE, CRACK SEAL, REMOVE EXISTING STRIPING & PAVEMENT MARKINGS AND CONSTRUCT SLURRY SEAL TYPE II.
2. CONSTRUCT 5" A.C. PAVEMENT OVER 8" COMPACTED AGGREGATE BASE PER APPROVAL BY THE CITY OF COSTA MESA.
3. SAWCUT & REMOVE FULL DEPTH OF EXISTING AC PAVEMENT AND CONSTRUCT SLOT PAVEMENT 5" OVER 8" COMPACTED AGGREGATE BASE PER DETAIL A ON SHEET C.2.
4. CONSTRUCT 6" CURB & GUTTER, TYPE "C-6" (W=18") PER CITY OF COSTA MESA STD. DWG. NO. 312 AND PER PROJECT SPECIFICATIONS.
5. CONSTRUCT 6" CURB, TYPE A1-6(150) PER SPPWC STD PLAN 120-2.
6. CONSTRUCT 3' WIDE CONCRETE V-GUTTER PER DETAIL C ON SHEET C.2. AND PER CITY OF COSTA MESA STD. DWG. NO.415.
7. CONSTRUCT CURB RAMP PER CALTRANS STD. PLAN RSP A88A (MODIFIED).
8. CONSTRUCT CONCRETE SIDEWALK PER LANDSCAPE PLAN AND PER CITY OF COSTA MESA STD. DWG. NO.411 (RUNNING SLOPE MAX 5% AND CROSS SLOPE MAX. 2%).
9. CONSTRUCT CONCRETE WHEEL STOP PER DETAIL B ON SHEET C.2.
11. ADJUST TO GRADE EXISTING SEWER CLEANOUT.
12. CONSTRUCT 4" SOLID WHITE PAINT.
15. CONSTRUCT DRIVEWAY APPROACH PER SPPWC STD. PLAN 110-2 TYPE B, W=13.5'.
16. PROTECT IN PLACE EXISTING SURVEY MONUMENT OR RE-ESTABLISHED BY CONTRACTOR'S LICENSED LAND SURVEYOR AS REQUIRED.
17. CONSTRUCT TRUNCATED DOMES PER CBC 11B-705, FIG. 11B-1009.2 AND PER DE
18. CONSTRUCT PARKING SIGN PER CBC 11B-705, FIG. 11B-502.6.
19. CONSTRUCT 4" WIDE WHITE STRIPE AT 36" O.C.
20. CONSTRUCT W2-6 SIGN AND POST.
21. CONSTRUCT 6" WIDE YELLOW PAINT.
22. CONSTRUCT 2" PVC SDR-35 WASTE LINE.
23. CONSTRUCT 3' SQUARE DRY WELL PER DETAIL F ON SHEET 2.
24. INSTALL 3/4" PVC SCHEDULE 80 WATERLINE.

DISPOSITION NOTES

M MATCH/JOIN EXISTING

P PROTECT IN PLACE

LEGEND

A.C. RECONSTRUCTION

SLURRY SEAL

CONCRETE

NOTES:

1. INSTALL #14 AWG COPPER CLAD STEEL TRACER WIRE BY COPPER HEAD INDUSTRIES (OR APPROVED EQUAL) FOR ALL PVC WATER LINE.
2. TRACER WIRE TO RUN CONTINUOUSLY ALONG THE ENTIRE LENGTH OF PVC PIPE AND MAINTAINED ON PIPE CENTERLINE DURING TRENCH BACKFILL.
3. WIRE SPLICE CONNECTORS SHALL BE SILICONE FILLED TYPE.

NOTE:

PRIOR TO COMMENCING THE CONTRACTOR SHALL VERIFY THE LOCATION, PIPE SIZE AND INVERT ELEVATION OF EXISTING WATERLINE. NOTIFY ENGINEER FOR EVALUATIONS AND/OR PLAN MODIFICATIONS AS DEEMED NECESSARY.

GRAPHIC SCALE
20 0 10 20 40
1 inch = 20 ft.

Landscape Architect:

David Volz Design
Landscape Architecture & Park Planning

Costa Mesa Office:
151 Kalmus Drive, Suite M8
Costa Mesa, CA 92626
Phone: (714) 641-1300
Fax: (714) 641-1323

e-mail: drawings@dvolzdesign.com
www.dvolzdesign.com

Subconsultant:

NV5
WWW.NV5.COM
163 TECHNOLOGY DR
SUITE 100
IRVINE, CA 92618
TEL. (949) 585-0477
FAX. (949) 585-0433

Seal:

REGISTERED PROFESSIONAL ENGINEER
DAVID NIKRAFF
No. 42697
CIVIL
STATE OF CALIFORNIA

CALL TOLL FREE
811
DIGALERT

UNDERGROUND SERVICE ALERT OF SOUTHERN CALIFORNIA

ATTENTION IS DIRECTED TO THE POSSIBLE EXISTENCE OF UNDERGROUND FACILITIES NOT KNOWN OR IN A LOCATION DIFFERENT FROM THAT WHICH IS SHOWN ON THE PLANS OR IN THE SPECIAL PROVISIONS. THE CONTRACTOR SHALL TAKE STEPS TO ASCERTAIN THE EXACT LOCATION OF ALL UNDERGROUND FACILITIES PRIOR TO DOING WORK THAT MAY DAMAGE SUCH FACILITIES OR INTERFERE WITH THEIR SERVICE.

BEFORE EXCAVATING, THE CONTRACTOR SHALL VERIFY THE LOCATION OF UNDERGROUND UTILITIES BY CONTRACTING UNDERGROUND SERVICE ALERT. CALL TOLL FREE 811.

Revisions:

No.	Date	Revisions	By

Project :
JACK HAMMETT SPORTS COMPLEX
PARKING LOT IMPROVEMENTS

Owner:
City of Costa Mesa

Project No :	19-15
Drawn By :	AB
Checked By :	DN
Date :	AUG 2021
Scale :	AS SHOWN

Drawing Title :
PARKING LOT GRADING PLAN/ IMPROVEMENT PLAN

Drawing No :
C.4

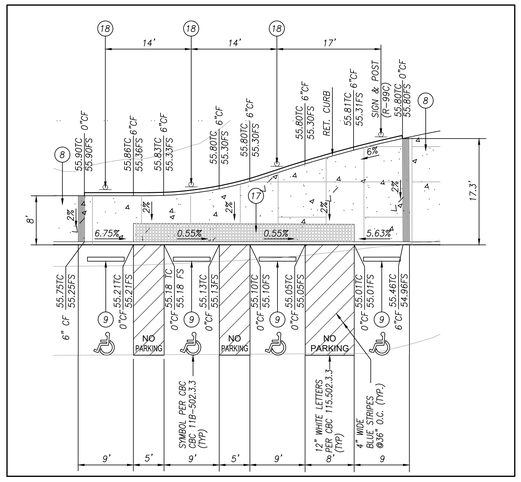

DETAIL 2

SCALE: 1"=10'

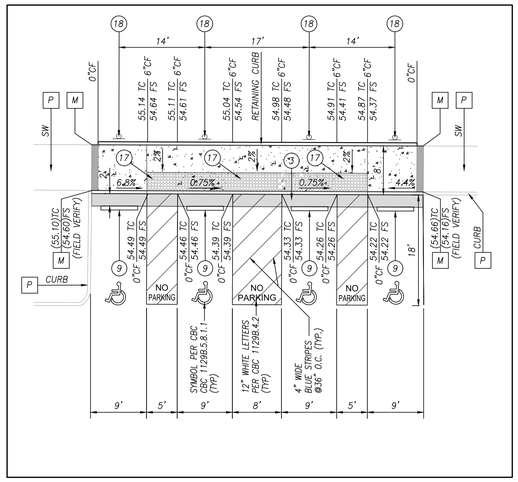

DETAIL 3

SCALE: 1"=10'

CONSTRUCTION NOTES

1. WEED ABATE, CRACK SEAL, REMOVE EXISTING STRIPING & PAVEMENT MARKINGS AND CONSTRUCT SLURRY SEAL TYPE II.
2. CONSTRUCT 5" A.C. PAVEMENT OVER 8" COMPACTED AGGREGATE BASE PER APPROVAL BY THE CITY OF COSTA MESA.
3. SAWCUT & REMOVE FULL DEPTH OF EXISTING AC PAVEMENT AND CONSTRUCT SLOT PAVEMENT 5" OVER 8" COMPACTED AGGREGATE BASE PER DETAIL A ON SHEET C.2.
4. CONSTRUCT 6" CURB & GUTTER. TYPE "C-6" (W=18") PER CITY OF COSTA MESA STD. DWG. NO. 312 AND PER PROJECT SPECIFICATIONS.
5. CONSTRUCT 6" CURB, TYPE A1-6(150) PER SPPWC STD PLAN 120-2.
7. CONSTRUCT CURB RAMP PER CALTRANS STD. PLAN RSP A88A (MODIFIED).
8. CONSTRUCT CONCRETE SIDEWALK PER LANDSCAPE PLAN AND PER CITY OF COSTA MESA STD. DWG. NO.411 (RUNNING SLOPE MAX 5% AND CROSS SLOPE MAX. 2%).
9. CONSTRUCT CONCRETE WHEEL STOP PER DETAIL B ON SHEET C.2.
12. CONSTRUCT 4" SOLID WHITE PAINT.
17. CONSTRUCT TRUNCATED DOMES PER CBC 11B-705, FIG. 11B-1009.2 AND PER DETAIL D ON SHEET 2
18. CONSTRUCT PARKING SIGN PER CBC 11B-705, FIG. 11B-502.6.
19. CONSTRUCT 4" WIDE WHITE STRIPE AT 36" O.C.

DISPOSITION NOTES

M MATCH/JOIN EXISTING

P PROTECT IN PLACE

LEGEND

A.C. RECONSTRUCTION

SLURRY SEAL

CONCRETE

GRAPHIC SCALE

20 0 10 20 40

1 inch = 20 ft.

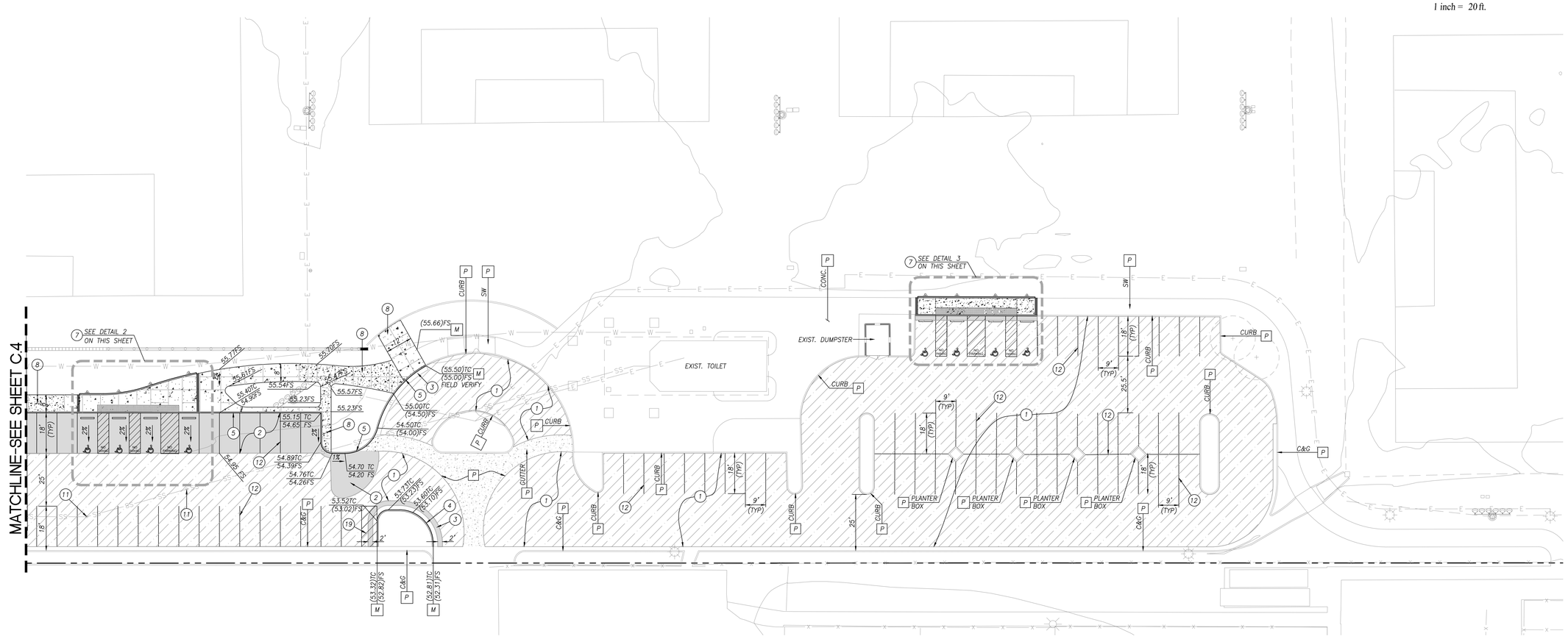

Landscape Architect:

David Volz Design
Landscape Architecture & Park Planning

Costa Mesa Office:
151 Kalmus Drive, Suite M8
Costa Mesa, CA 92626
Phone: (714) 641-1300
Fax: (714) 641-1323

e-mail: drawings@dvolzdesign.com
www.dvolzdesign.com

Subconsultant:

NV5
163 TECHNOLOGY DR
SUITE 100
IRVINE, CA 92618
TEL. (949) 585-0477
FAX. (949) 585-0433
WWW.NV5.COM

Seal:

REGISTERED PROFESSIONAL ENGINEER
DAVID NIKNAFS
No. 42697
CIVIL
STATE OF CALIFORNIA

CALL TOLL FREE
811
DIGALERT

UNDERGROUND SERVICE ALERT OF SOUTHERN CALIFORNIA

ATTENTION IS DIRECTED TO THE POSSIBLE EXISTENCE OF UNDERGROUND FACILITIES NOT KNOWN OR IN A LOCATION DIFFERENT FROM THAT WHICH IS SHOWN ON THE PLANS OR IN THE SPECIFICATIONS. CONTRACTOR SHALL TAKE ALL NECESSARY STEPS TO ASCERTAIN THE EXACT LOCATION OF ALL UNDERGROUND FACILITIES PRIOR TO DOING WORK THAT MAY DAMAGE SUCH FACILITIES OR INTERFERE WITH THEIR SERVICE.

BEFORE EXCAVATING, THE CONTRACTOR SHALL VERIFY THE LOCATION OF UNDERGROUND UTILITIES BY CONTRACTING UNDERGROUND SERVICE ALERT. CALL TOLL FREE 811.

Revisions:

No.	Date	Revisions	By

Project :
JACK HAMMETT SPORTS COMPLEX
PARKING LOT IMPROVEMENTS

Owner:
City of Costa Mesa

Project No :	19-15
Drawn By :	AB
Checked By :	DN
Date :	AUG 2021
Scale :	AS SHOWN

Drawing Title :
PARKING LOT GRADING PLAN/ IMPROVEMENT PLAN

Drawing No :
C.5

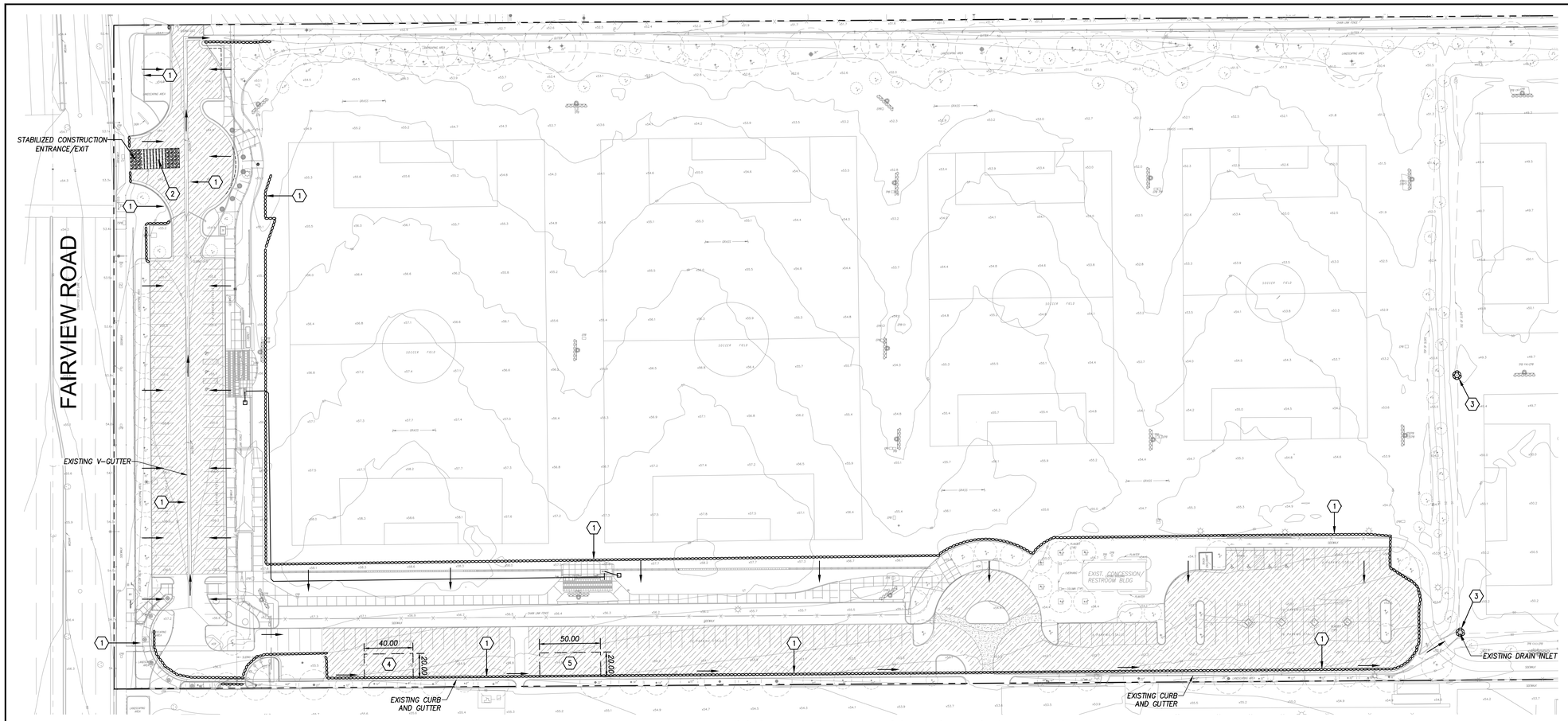

GRAPHIC SCALE

40 20 0 20 40 80

1 inch = 40 ft.

EROSION CONTROL CONSTRUCTION NOTES

1. CONSTRUCT GRAVEL BAGS (2 BAGS HIGH) PER BMP SE-6. SEE DETAIL 1 HEREON.
2. INSTALL RUMPLE PLATE AND ROAD STABILIZATION PER BMP TC-1. SEE DETAIL 2 HEREON.
3. INSTALL STORM DRAIN INLET PROTECTION PER BMP SE-10. SEE DETAIL 3 HEREON
4. TEMPORARY RECYCLE STORAGE LOCATION
5. DESIGNATED WASHING AREA

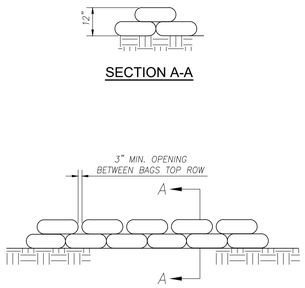

1 GRAVEL BAG DETAIL

NOT TO SCALE

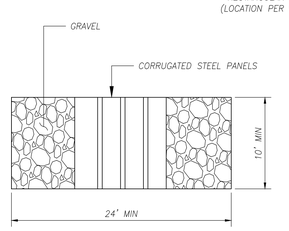

2 STABILIZED CONSTRUCTION ENTRANCE/EXIT DETAIL

NOT TO SCALE

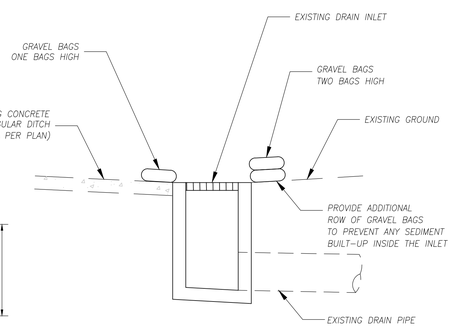

3 STORM DRAIN INLET PROTECTION DETAILS

NOT TO SCALE

EROSION AND SEDIMENT CONTROL REQUIREMENTS

Dry Season Requirements	SPECIFIED BMPs BMP Detail(s)/ Sheet Number
A. Wind erosion BMPs (dust control) shall be implemented.	WE-1
B. Sediment control BMPs shall be implemented at the site perimeter, at all operational storm drain inlets and at all non-active slopes.	SE-3 SE-10
C. BMPs to control off-site sediment tracking shall be implemented and maintained.	TC-1
D. Appropriate waste management and materials pollution control BMPs shall be implemented to prevent the contamination of stormwater by wastes and construction materials.	SE-6 SE-10 WM-3 WM-8
E. Appropriate non-stormwater BMPs shall be implemented to prevent the contamination of stormwater from construction activities.	SE-10 NS-3 NS-8 NS-9 NS-10
F. Adequate physical or vegetation erosion control BMPs (temporary or permanent) shall be installed and established for all completed slopes prior to the start of the rainy season. These BMPs must be maintained throughout the rainy season. If a selected BMP fails, it must be repaired and improved, or replaced with an acceptable alternate as soon as it is safe to do so. The failure of a BMP may indicate that the BMP, as installed, was not adequate for the circumstances in which it was used. Repairs or replacements must result in a more robust BMP, or additional BMPs should be installed to provide adequate protection.	EC-3
G. Adequate erosion and sediment controls must be implemented prior to the onset of a storm event for all actively graded areas.	SE-3 SE-10
H. A disturbed area that is not completed but that is not being actively graded (non-active area) shall be fully protected from erosion with the referenced temporary and/or permanent BMPs (erosion and sediment control). The ability to deploy standby BMP materials is not sufficient for these areas. Erosion and sediment control BMPs must actually be deployed. This includes all building pads, unfinished roads and slopes.	EC-3
I. Sufficient materials needed to install referenced standby erosion and sediment control BMPs necessary to completely protect the exposed portions of the site from erosion and to prevent sediment discharges shall be stored on site. Areas that have already been protected from erosion using permanent physical stabilization or established vegetation stabilization BMPs are not considered "exposed" for purposes of this requirement.	SE-6

NOTE: *For Risk Level 2 and 3 sites, there shall be a "Rain Event Action Plan" and the ability to deploy standby erosion and sediment control BMP's as needed to completely protect the exposed portions of the site within 48 hours of a predicted storm event (a predicted storm event is defined as a forecasted 50% chance of rain).*

POLLUTION PREVENTION NOTES

In order to meet the requirements of the National Pollutant Discharge Elimination System (NPDES) program for construction, construction contractors shall install and maintain appropriate Best Management Practices (BMPs), as shown in the Erosion and Sediment Control Plan, on all construction projects. BMPs shall be installed in accordance with industry recommended standards, and/or in accordance with any General Construction Permit issued by the state for the project to prevent any discharges from the project site or into any storm drain facilities. All sediments, construction materials, debris and wastes, and other pollutants must be retained on site and may not be transported from the site via sheet flow, swales, area drains, natural drainage courses, wind, or vehicle tracking. Under direction of the Engineer of Record, erosion and/or sediment control devices shall be modified as needed as the project progresses to ensure effectiveness.

I hereby certify that I have read and understand the requirements in the Construction General Permit and that the erosion control plans and BMPs shown hereon are in compliance with these requirements.

Signed by: _____

In case of an emergency, the responsible person to be contacted shall be:

Name: _____ Title: _____

Company: _____ 24-Hr. Phone No.: _____

EROSION CONTROL NOTES

SANDBAGS
(GRAVEL BAGS)

1. GENERAL: SANDBAG SHALL INCLUDE PROVIDING ALL LABOR, MATERIALS, AND EQUIPMENT TO FABRICATE AND INSTALL SANDBAGS AS REQUIRED TO FACILITATE THE CONTROL OF EROSION.

2. LOCATION: SANDBAGS SHALL BE PLACED PER PLAN, AND IN LOCATIONS SPECIFIED BY THE COUNTY, AND IN LOCATIONS DEEMED NECESSARY BY THE CONTRACTOR.

3. FABRICATION: SANDBAGS SHALL BE FABRICATED USING FACTORY SEWN OR SEALED BAGS OF WOVEN POLYPROPYLENE, TREATED TO RESIST DEGRADATION BY ULTRAVIOLET LIGHT AND HAVING SUFFICIENT RESISTANCE TO TEARING TO ALLOW RELOCATION OF BAGS WITHIN SIX MONTHS OF INITIAL PLACEMENT WITH A LOSS OF NOT MORE THAN FIVE PERCENT OF THE BAGS.

4. INSTALLATION: SANDBAGS SHALL BE INSTALLED IN A MANNER TO ENTRAP SILT AND MUD, AND TO DIVERT THE FLOW OF WATER. NOTWITHSTANDING THE OTHER REQUIREMENTS OF THIS SPECIFICATION, REJECT THEIR INSTALLATION.

   SANDBAGS SHALL BE INSTALLED WITH THE WIDEST FACE AGAINST THE GROUND SURFACE OR THE UNDERLYING COURSE OF BAGS, AND PRESSED IN PLACE TO CONFORM TO THE UNDERLYING SURFACE. THE BAGS SHALL BE PLACED WITH THE TIED ENDS IN THE "UPHILL" OR "UPSTREAM" DIRECTION. BEGINNING AT THE LOWEST OR MOST DOWNSTREAM BAG, OF THE PREVIOUSLY PLACED BAG, WITH NOT LESS THAN 10 PERCENT IN CONTACT.

   SUBSEQUENT COURSES OF BAGS SHALL BE PLACED AS DESCRIBED PREVIOUSLY, WITH THE MID-POINT OF THE BAGS STRADDLING THE JOINTS OF BAGS IN THE UNDERLYING ROW.

   CONSTRUCTION OF A SANDBAG BERM PERPENDICULAR TO THE DIRECTION OF FLOW SHALL INCORPORATE BAGS PLACED IN A "PYRAMID" CONFIGURATION, WITH ALL INDIVIDUAL BAGS ORIENTED PERPENDICULAR TO THE DIRECTION OF FLOW. THE BERM SHALL BE CONSTRUCTED WITH A SPECIFIED NUMBER OF ROWS AT THE BOTTOM (IN CONTACT WITH THE GROUND), WITH SUCCESSIVELY FEWER ROWS IN EACH OVERLYING COURSE. THE UPSTREAM AND DOWNSTREAM FACES OF THE BERM SHALL BE NO STEEPER THAN 1 1/2 FEET HORIZONTAL TO 1 VERTICAL.

   DAMAGE WHICH COULD FORESEEBLY BE PREVENTED BY PROPER SANDBAG INSTALLATION SHALL BE THE CONTRACTOR'S RESPONSIBILITY.

5. COMPENSATION: THE PERFORMANCE OF THE REQUIREMENTS OF THIS SECTION SHALL BE COMPENSATED AT THE CONTRACT UNIT PRICES FOR SANDBAGS.

BMP TABLE:

SYMBOL		DESCRIPTION
ENTIRE SITE	WE-1	WIND EROSION CONTROLS
	TC-1	CONSTRUCTION ROAD ENTRANCE
	SE-6	GRAVEL BAG BARRIER
	SE-10	STORM DRAIN INLET PROTECTION

CAUTION-NOTICE TO CONTRACTOR

THE CONTRACTOR IS SPECIFICALLY CAUTIONED THAT THE LOCATION AND/ OR ELEVATION OF EXISTING UTILITIES AS SHOWN ON THESE PLANS IS BASED ON RECORDS OF THE VARIOUS UTILITY COMPANIES AND, WHERE POSSIBLE, MEASUREMENTS TAKEN IN THE FIELD. THE INFORMATION IS NOT TO BE RELIED ON AS BEING EXACT OR COMPLETE. THE CONTRACTOR SHALL CALL USA DIG ALTERT AT 1-800-227-2600

NOTES TO CONTRACTOR

STABILIZED CONSTRUCTION ENTRANCE AND RECYCLING STORAGE AREA SHALL BE DESIGNATED BY SITE SUPERVISOR AND INCLUDED ON THE SWPPP/EROSION CONTROL PLAN. AS SITE CONDITIONS CHANGE, THE SWPPP/ EROSION CONTROL PLAN SHALL BE UPDATED TO REFLECT CURRENT CONDITIONS.

IT IS THE CONTRACTOR/SUPERVISOR'S RESPONSIBILITY TO KEEP THE SWPPP MAP CURRENT, BMPs SHOULD BE ADDED, MOVED OR REMOVED BASED ON SITE CONDITIONS. HAND-MARKED ALTERATIONS WITH INITIALS AND DATE ARE AN ACCEPTABLE FORM OF ALTERATION. THE CONTRACTOR MAY BE ASKED AT ANY TIME TO PRODUCE THE SWPPP MAP. FAILURE TO KEEP THE MAP CURRENT COULD RESULT IN A NOTICE OF VIOLATION AND/OR FINE.

Landscape Architect:

David Volz Design
Landscape Architecture & Park Planning

Costa Mesa Office:
151 Kalmus Drive, Suite M8
Costa Mesa, CA 92626
Phone: (714) 641-1300
Fax: (714) 641-1323

e-mail: drawings@dvolzdesign.com
www.dvolzdesign.com

Subconsultant:

NV5
WWW.NV5.COM
163 TECHNOLOGY DR
SUITE 100
IRVINE, CA 92618
TEL. (949) 585-0477
FAX. (949) 585-0433

Seal:

REGISTERED PROFESSIONAL ENGINEER DAVID NIKNAFS No. 42697 CIVIL STATE OF CALIFORNIA

CALL TOLL FREE 811 DIGALERT

UNDERGROUND SERVICE ALERT OF SOUTHERN CALIFORNIA

ATTENTION IS DIRECTED TO THE POSSIBLE EXISTENCE OF UNDERGROUND FACILITIES NOT KNOWN OR IN A LOCATION DIFFERENT FROM THAT WHICH IS SHOWN ON THE PLANS OR IN THE SPECIAL PROVISIONS. THE CONTRACTOR SHALL TAKE STEPS TO ASCERTAIN THE EXACT LOCATION OF ALL UNDERGROUND FACILITIES PRIOR TO DOING WORK THAT MAY DAMAGE SUCH FACILITIES OR INTERFERE WITH THEIR SERVICE.

BEFORE EXCAVATING, THE CONTRACTOR SHALL VERIFY THE LOCATION OF UNDERGROUND UTILITIES BY CONTACTING UNDERGROUND SERVICE ALERT, CALL TOLL FREE 811.

Revisions:

No.	Date	Revisions	By

Project :
JACK HAMMETT SPORTS COMPLEX
PARKING LOT IMPROVEMENTS

Owner:
City of Costa Mesa

Project No :	19-15
Drawn By :	AB
Checked By :	DN
Date :	AUG 2021
Scale :	AS SHOWN

Drawing Title :
EROSION CONTROL PLAN

Drawing No :
C.6

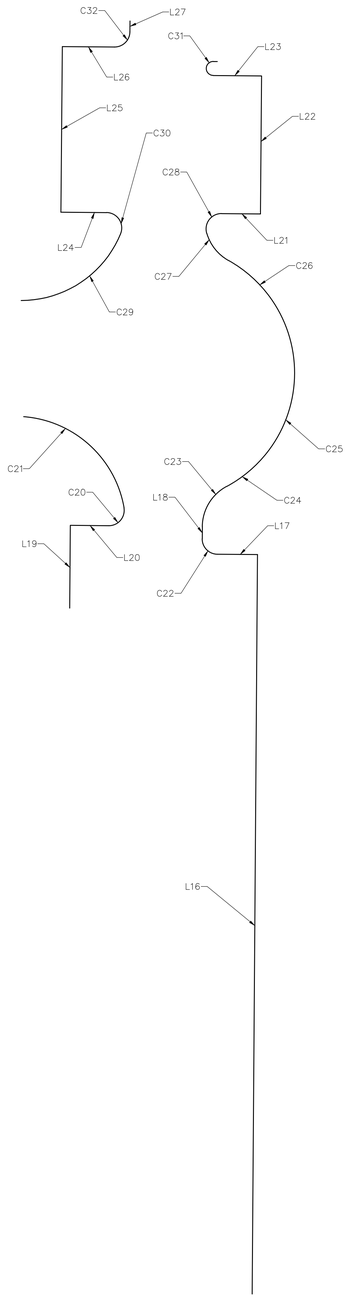

CURVE TABLE				
Curve #	Length	Radius	Delta	Tabgent
C1	23.46	15.00	89.63	14.90
C2	7.85	5.00	90.00	5.00
C3	35.92	44.00	46.77	19.03
C4	19.77	15.00	75.53	11.62
C5	7.85	5.00	90.00	5.00
C6	7.85	5.00	89.95	5.00
C7	83.97	35.00	137.46	89.91
C8	9.56	3.12	175.50	79.46
C9	31.42	20.00	90.00	20.00
C10	7.85	5.00	90.00	5.00
C11	7.86	5.00	90.08	5.01
C12	50.32	40.00	72.08	29.11
C13	83.97	35.00	137.46	89.91
C14	3.86	5.00	44.23	2.03
C15	1.89	1.00	108.09	1.38
C16	7.81	5.00	89.47	4.95
C17	1.58	1.00	90.56	1.01
C18	7.80	5.00	89.33	4.94
C19	1.58	1.00	90.63	1.01
C20	8.77	5.00	100.50	6.01
C21	47.52	36.00	75.63	27.94
C22	7.85	5.00	90.00	5.00
C23	16.05	15.00	61.32	8.89
C24	17.44	42.00	23.79	8.85
C25	54.00	42.00	73.67	31.46
C26	18.46	42.00	25.18	9.38
C27	11.68	15.00	44.62	6.16
C28	9.31	5.00	106.69	6.72
C29	41.42	35.00	67.81	23.52
C30	9.75	5.00	111.72	7.37
C31	7.19	2.28	180.31	835.76
C32	7.85	5.00	90.00	5.00

LINE TABLE		
Line #	Length	Bearing
L1	4.86	S89° 37' 32.30"E
L2	11.29	S0° 22' 27.70"W
L3	5.65	S89° 37' 32.30"E
L4	13.00	S0° 22' 27.70"W
L5	513.00	S89° 37' 32.30"E
L6	36.00	N89° 37' 06.01"W
L7	14.60	N0° 22' 27.70"E
L8	1.54	N90° 00' 00.00"E
L9	12.97	S0° 22' 27.70"W
L10	13.66	S89° 47' 33.44"E
L11	13.41	S89° 35' 36.41"E
L12	74.55	N89° 34' 28.57"W
L13	20.06	N89° 34' 28.57"W
L14	13.00	S89° 35' 36.41"E
L15	1.31	S0° 24' 23.59"W
L16	241.12	N0° 24' 45.50"E
L17	13.05	S89° 30' 39.23"E
L18	3.93	N0° 29' 20.77"E
L19	27.00	N0° 29' 20.77"E
L20	12.47	S89° 30' 39.23"E
L21	12.63	S89° 30' 39.23"E
L22	45.00	N0° 29' 20.77"E
L23	15.75	S89° 30' 39.23"E
L24	14.87	S89° 30' 39.23"E
L25	54.00	N0° 29' 20.77"E
L26	17.00	S89° 30' 39.23"E
L27	3.56	N0° 29' 20.77"E
L28	8.30	N47° 53' 01.02"E

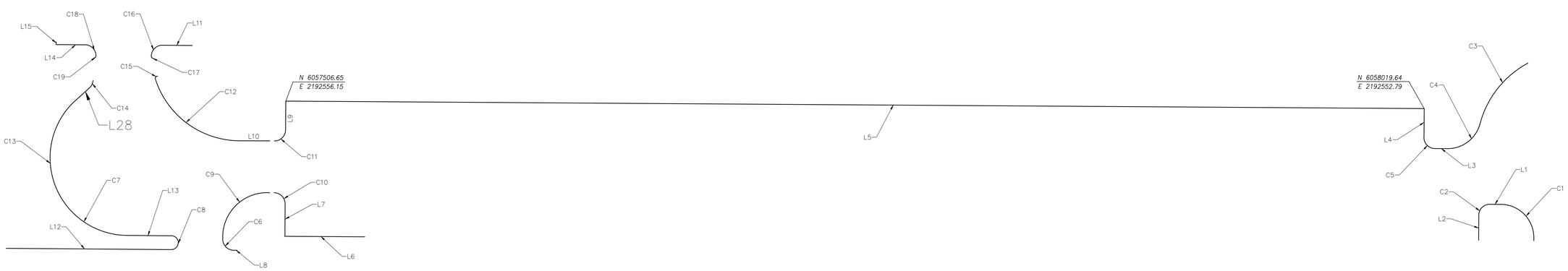

GRAPHIC SCALE

40 0 20 40 80

1 inch = 40 ft.

Landscape Architect:

DVD
David Volz Design
Landscape Architecture & Park Planning

Costa Mesa Office:
151 Kalmus Drive, Suite M8
Costa Mesa, CA 92626
Phone: (714) 641-1300
Fax: (714) 641-1323

e-mail: drawings@dvolzdesign.com
www.dvolzdesign.com

Subconsultant:

NV5
WWW.NV5.COM
163 TECHNOLOGY DR
SUITE 100
IRVINE, CA 92618
TEL. (949) 585-0477
FAX. (949) 585-0433

Seal:

REGISTERED PROFESSIONAL ENGINEER
DAVID NIKNAFS
No. 42697
CIVIL
STATE OF CALIFORNIA

CALL TOLL FREE
811
DIGALERT

UNDERGROUND SERVICE ALERT OF SOUTHERN CALIFORNIA

ATTENTION IS DIRECTED TO THE POSSIBLE EXISTENCE OF UNDERGROUND FACILITIES NOT KNOWN OR IN A LOCATION DIFFERENT FROM THAT WHICH IS SHOWN ON THE PLANS OR IN THE SPECIAL PROVISIONS. THE CONTRACTOR SHALL TAKE ALL PRECAUTIONARY MEASURES TO PROTECT THE EXISTING UNDERGROUND FACILITIES PRIOR TO DOING WORK THAT MAY DAMAGE SUCH FACILITIES OR INTERFERE WITH THEIR SERVICE.

BEFORE EXCAVATING, THE CONTRACTOR SHALL VERIFY THE LOCATION OF UNDERGROUND UTILITIES BY CONTACTING UNDERGROUND SERVICE ALERT, CALL TOLL FREE 811.

Revisions:

No.	Date	Revisions	By

Project :
JACK HAMMETT SPORTS COMPLEX
PARKING LOT IMPROVEMENTS

Owner:
City of Costa Mesa

Project No :	19-15
Drawn By :	AB
Checked By :	DN
Date :	AUG 2021
Scale :	AS SHOWN

Drawing Title :
HORIZONTAL CONTROL PLAN

Drawing No :
C.7

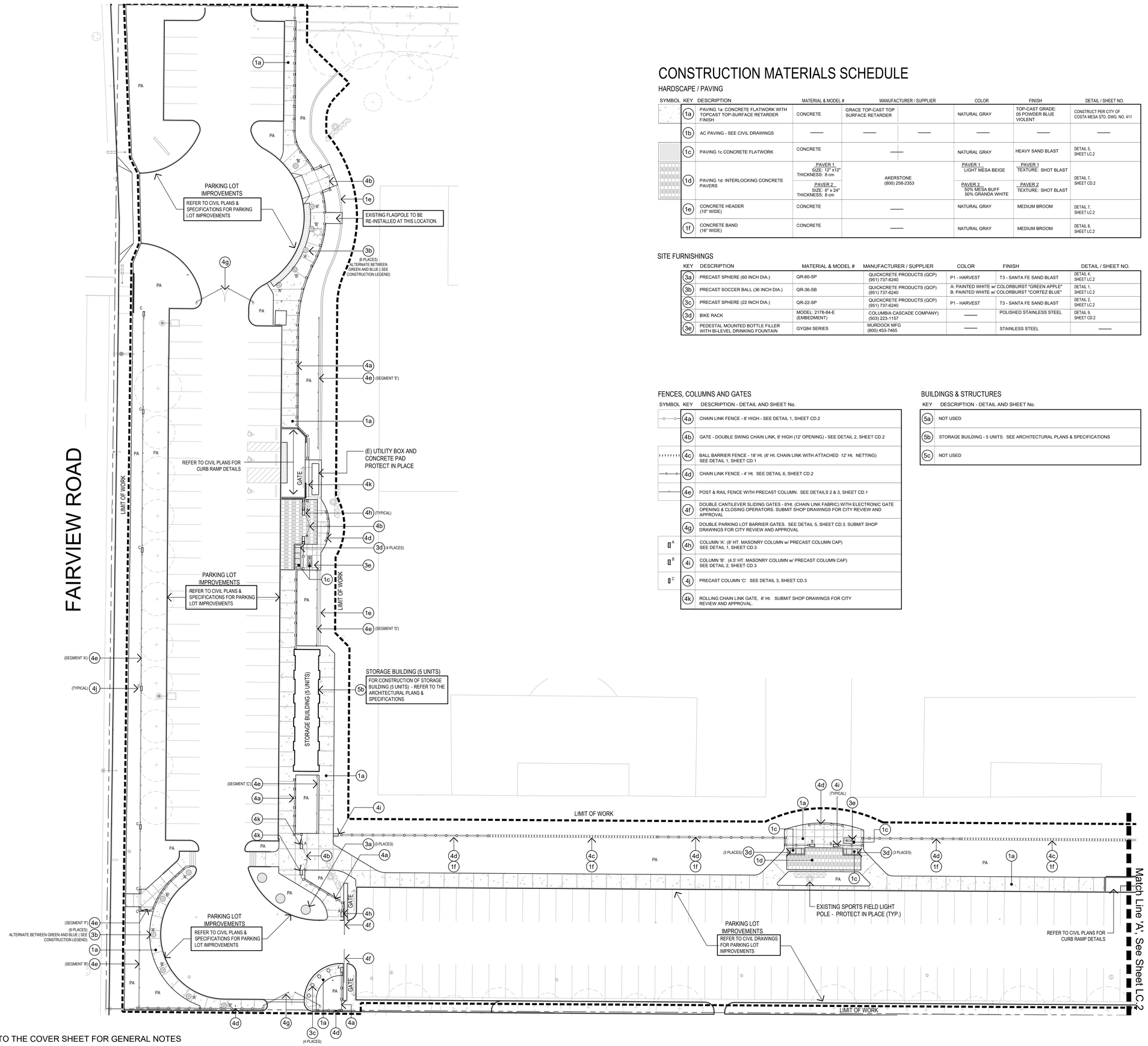

CONSTRUCTION MATERIALS SCHEDULE

HARDSCAPE / PAVING

SYMBOL	KEY	DESCRIPTION	MATERIAL & MODEL #	MANUFACTURER / SUPPLIER	COLOR	FINISH	DETAIL / SHEET NO.
	1a	PAVING 1a: CONCRETE FLATWORK WITH TOPCAST TOP-SURFACE RETARDER FINISH	CONCRETE	GRACE TOP-CAST TOP SURFACE RETARDER	NATURAL GRAY	TOP-CAST GRADE: 05 POWDER BLUE VIOLENT	CONSTRUCT PER CITY OF COSTA MESA STD. DWG. NO. 411
	1b	AC PAVING - SEE CIVIL DRAWINGS	——	——	——	——	——
	1c	PAVING 1c CONCRETE FLATWORK	CONCRETE	——	NATURAL GRAY	HEAVY SAND BLAST	DETAIL 5, SHEET LC.2
	1d	PAVING 1d: INTERLOCKING CONCRETE PAVERS	PAVER 1 SIZE: 12" x12" THICKNESS: 8 cm PAVER 2 SIZE: 6" x 24" THICKNESS: 8 cm	AKERSTONE (800) 258-2353	PAVER 1 LIGHT MESA BEIGE PAVER 2 50% MESA BUFF 50% GRANDA WHITE	PAVER 1 TEXTURE: SHOT BLAST PAVER 2 TEXTURE: SHOT BLAST	DETAIL 7, SHEET CD.2
	1e	CONCRETE HEADER (10" WIDE)	CONCRETE	——	NATURAL GRAY	MEDIUM BROOM	DETAIL 7, SHEET LC.2
	1f	CONCRETE BAND (16" WIDE)	CONCRETE	——	NATURAL GRAY	MEDIUM BROOM	DETAIL 8, SHEET LC.2

SITE FURNISHINGS

KEY	DESCRIPTION	MATERIAL & MODEL #	MANUFACTURER / SUPPLIER	COLOR	FINISH	DETAIL / SHEET NO.
3a	PRECAST SPHERE (60 INCH DIA.)	QR-60-SP	QUICKCRETE PRODUCTS (QCP) (951) 737-6240	P1 - HARVEST	T3 - SANTA FE SAND BLAST	DETAIL 4, SHEET LC.2
3b	PRECAST SOCCER BALL (36 INCH DIA.)	QR-36-SB	QUICKCRETE PRODUCTS (QCP) (951) 737-6240	A: PAINTED WHITE w/ COLORBURST "GREEN APPLE" B: PAINTED WHITE w/ COLORBURST "CORTEZ BLUE"	T3 - SANTA FE SAND BLAST	DETAIL 1, SHEET LC.2
3c	PRECAST SPHERE (22 INCH DIA.)	QR-22-SP	QUICKCRETE PRODUCTS (QCP) (951) 737-6240	P1 - HARVEST	T3 - SANTA FE SAND BLAST	DETAIL 2, SHEET LC.2
3d	BIKE RACK	MODEL: 2178-84-E (EMBEDMENT)	COLUMBIA CASCADE COMPANY) (503) 223-1157	——	POLISHED STAINLESS STEEL	DETAIL 9, SHEET CD.2
3e	PEDESTAL MOUNTED BOTTLE FILLER WITH BI-LEVEL DRINKING FOUNTAIN	GYQ84 SERIES	MURDOCK MFG (800) 453-7465	——	STAINLESS STEEL	——

FENCES, COLUMNS AND GATES

SYMBOL	KEY	DESCRIPTION - DETAIL AND SHEET No.
	4a	CHAIN LINK FENCE - 8' HIGH - SEE DETAIL 1, SHEET CD.2
	4b	GATE - DOUBLE SWING CHAIN LINK, 8' HIGH (12' OPENING) - SEE DETAIL 2, SHEET CD.2
	4c	BALL BARRIER FENCE - 18' Ht. (6' Ht. CHAIN LINK WITH ATTACHED 12' Ht. NETTING) SEE DETAIL 1, SHEET CD.1
	4d	CHAIN LINK FENCE - 4' Ht. SEE DETAIL 6, SHEET CD.2
	4e	POST & RAIL FENCE WITH PRECAST COLUMN. SEE DETAILS 2 & 3, SHEET CD.1
	4f	DOUBLE CANTILEVER SLIDING GATES - 8'Ht. (CHAIN LINK FABRIC) WITH ELECTRONIC GATE OPENING & CLOSING OPERATORS. SUBMIT SHOP DRAWINGS FOR CITY REVIEW AND APPROVAL
	4g	DOUBLE PARKING LOT BARRIER GATES. SEE DETAIL 5, SHEET CD.3. SUBMIT SHOP DRAWINGS FOR CITY REVIEW AND APPROVAL
A	4h	COLUMN 'A'. (8' HT. MASONRY COLUMN w/ PRECAST COLUMN CAP) SEE DETAIL 1, SHEET CD.3
B	4i	COLUMN 'B'. (4.5' HT. MASONRY COLUMN w/ PRECAST COLUMN CAP) SEE DETAIL 2, SHEET CD.3
C	4j	PRECAST COLUMN 'C'. SEE DETAIL 3, SHEET CD.3
	4k	ROLLING CHAIN LINK GATE, 8' Ht. SUBMIT SHOP DRAWINGS FOR CITY REVIEW AND APPROVAL.

BUILDINGS & STRUCTURES

KEY	DESCRIPTION - DETAIL AND SHEET No.
5a	NOT USED
5b	STORAGE BUILDING - 5 UNITS. SEE ARCHITECTURAL PLANS & SPECIFICATIONS
5c	NOT USED

REFER TO THE COVER SHEET FOR GENERAL NOTES

Landscape Architect:

David Volz Design
Landscape Architecture & Park Planning

Costa Mesa Office:
151 Kalmus Drive, Suite M8
Costa Mesa, CA 92626
Phone: (714) 641-1300
Fax: (714) 641-1323

e-mail: drawings@dvolzdesign.com
www.dvolzdesign.com

Subconsultant:

Seal:

REGISTERED LANDSCAPE ARCHITECT
GARY M. VOLZ
NO. 1883
SIGNATURE
REXP. FEB. 2022
8-5-21
DATE
STATE OF CALIFORNIA

CALL TOLL FREE
811
DIGALERT
UNDERGROUND SERVICE ALERT OF SOUTHERN CALIFORNIA

ATTENTION IS DIRECTED TO THE POSSIBLE EXISTENCE OF UNDERGROUND FACILITIES NOT KNOWN OR IN A LOCATION DIFFERENT FROM THAT WHICH IS SHOWN ON THE PLANS OR IN THE SPECIAL PROVISIONS. THE CONTRACTOR SHALL TAKE STEPS TO ASCERTAIN THE EXACT LOCATION OF ALL UNDERGROUND FACILITIES PRIOR TO DOING WORK THAT MAY DAMAGE SUCH FACILITIES OR INTERFERE WITH THEIR SERVICE.

BEFORE EXCAVATING, THE CONTRACTOR SHALL VERIFY THE LOCATION OF UNDERGROUND UTILITIES BY CONTRACTING UNDERGROUND SERVICE ALERT. CALL TOLL FREE 811.

Revisions:

No.	Date	Revisions	By

Project :
JACK HAMMETT SPORTS COMPLEX
LANDSCAPE, PARKING LOT EXPANSION & BUILDING IMPROVEMENTS
2750 FAIRVIEW ROAD

Owner:
City of Costa Mesa

Project No :	21-05
Drawn By :	PC / LP
Checked By :	GV
Date :	JULY, 2021
Scale :	AS SHOWN

Drawing Title :

CONSTRUCTION PLAN

Drawing No :

LC.1

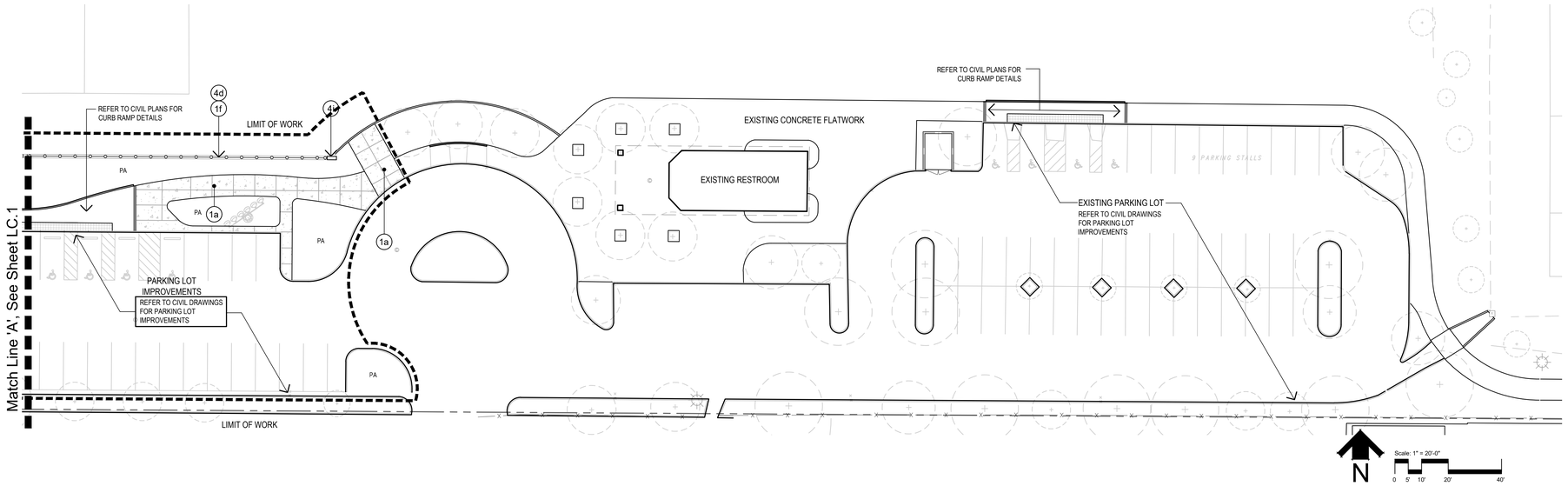

REFER TO THE COVER SHEET FOR GENERAL NOTES
REFER TO SHEET LC.1 FOR CONSTRUCTION MATERIALS SCHEDULE

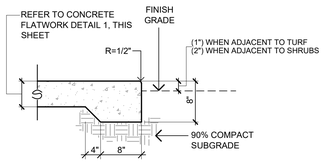

SECTION

3 THICKENED CONCRETE EDGE 1"=1'-0"

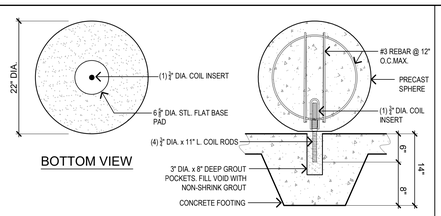

BOTTOM VIEW

SECTION

2 22 INCH PRECAST SPHERE 1"=1'-0"

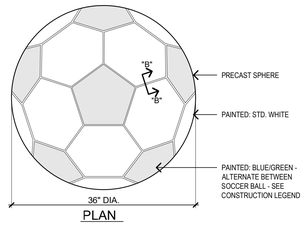

PLAN

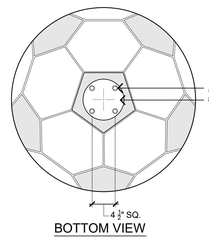

BOTTOM VIEW

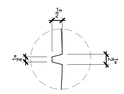

DETAIL "B"

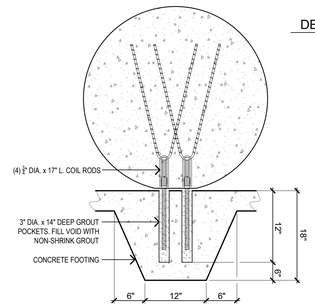

SECTION

1 PRECAST SOCCER BALL 1"=1'-0"

6 NOT USED

5 NOT USED

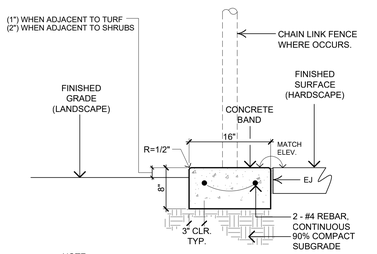

NOTE
WHERE CONCRETE BAND IS CONSTRUCTED UNDER FENCE, CONSTRUCT A WEAKENED PLANE JOINT AT THE CENTER OF EACH POST.
IF NO FENCE OCCURS, CONSTRUCT A WEAKEN PLANE JOINT EVERY 8' O.C. AND CONSTRUCTION JOINT EVERY 24' O.C.

SECTION

8 CONCRETE BAND (16" WIDE) 1"=1'-0"

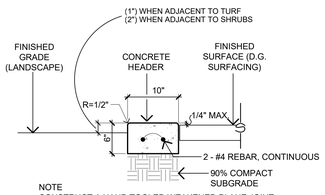

NOTE
CONSTRUCT A HAND TOOLED WEAKENED PLANE JOINT EVERY8' O.C. AND CONSTRUCTION JOINT EVERY 24' O.C.

SECTION

7 CONCRETE HEADER (10" WIDE) 1"=1'-0"

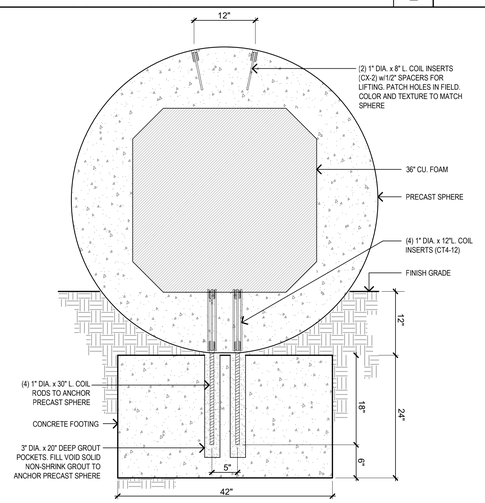

SECTION

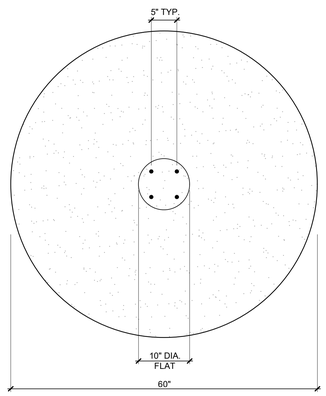

BOTTOM VIEW

4 60 INCH PRECAST SPHERE 1"=1'-0"

Landscape Architect:

David Volz Design
Landscape Architecture & Park Planning

Costa Mesa Office:
151 Kalmus Drive, Suite M8
Costa Mesa, CA 92626
Phone: (714) 641-1300
Fax: (714) 641-1323

e-mail: drawings@dvolzdesign.com
www.dvolzdesign.com

Subconsultant:

Seal:

REGISTERED LANDSCAPE ARCHITECT
GARY M. VAGNINI
NO. 3883
SIGNATURE
EXP. FEB. 2021
8-5-21
DATE
STATE OF CALIFORNIA

CALL TOLL FREE
811
DIGALERT

UNDERGROUND SERVICE ALERT OF SOUTHERN CALIFORNIA

ATTENTION IS DIRECTED TO THE POSSIBLE EXISTENCE OF UNDERGROUND FACILITIES NOT KNOWN OR IN A LOCATION DIFFERENT FROM THAT WHICH IS SHOWN ON THE PLANS OR IN THE SPECIAL PROVISIONS. THE CONTRACTOR SHALL TAKE ALL PRECAUTIONARY MEASURES TO PROTECT ALL UNDERGROUND FACILITIES PRIOR TO DOING WORK THAT MAY DAMAGE SUCH FACILITIES OR INTERFERE WITH THEIR SERVICE.

BEFORE EXCAVATING, THE CONTRACTOR SHALL VERIFY THE LOCATION OF UNDERGROUND UTILITIES BY CONTRACTING UNDERGROUND SERVICE ALERT. CALL TOLL FREE 811.

Revisions:

No.	Date	Revisions	By

Project :
JACK HAMMETT SPORTS COMPLEX
LANDSCAPE, PARKING LOT EXPANSION & BUILDING IMPROVEMENTS
2750 FAIRVIEW ROAD

Owner:
City of Costa Mesa

Project No :	21-05
Drawn By :	PC / LP
Checked By :	GV
Date :	JULY, 2021
Scale :	AS SHOWN

Drawing Title :
CONSTRUCTION PLAN

Drawing No :
LC.2

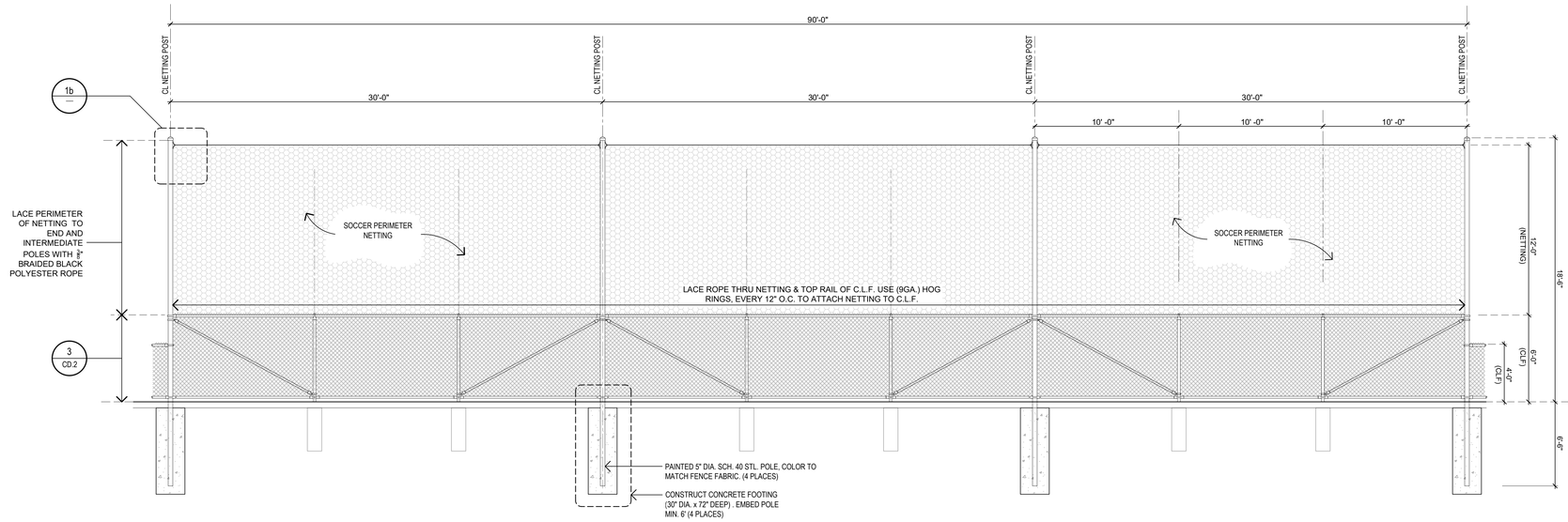

1a PERIMETER SOCCER NETTING

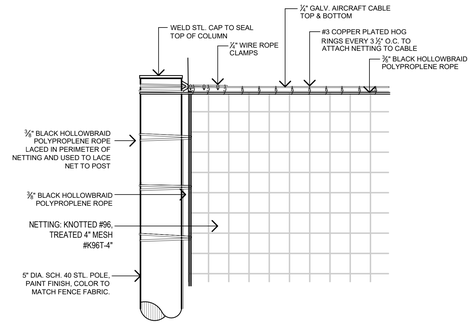

1b SOCCER PERIMETER NETTING ATTACHMENT

1 18' HT. BALL BARRIER FENCE (6' CHAIN LINK FENCE WITH 12' NETTING ATTACHED)

¼" = 1'-0"

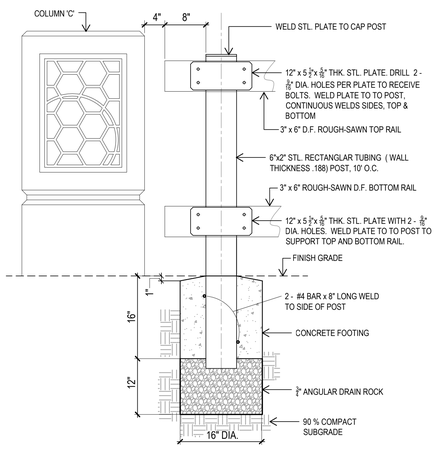

2a SECTION
1"=1'-0"

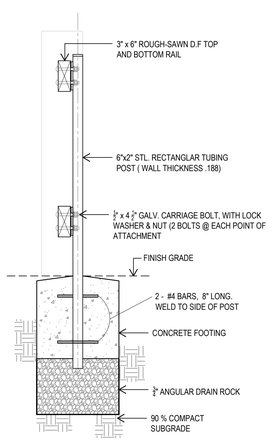

2b SECTION
1"=1'-0"

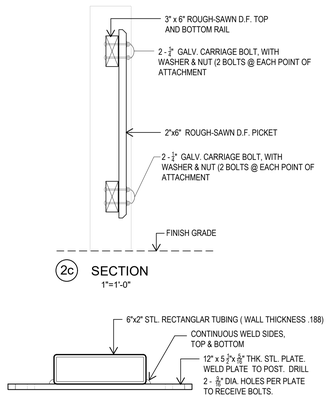

2c SECTION
1"=1'-0"

2d PLAN
3"=1'-0"

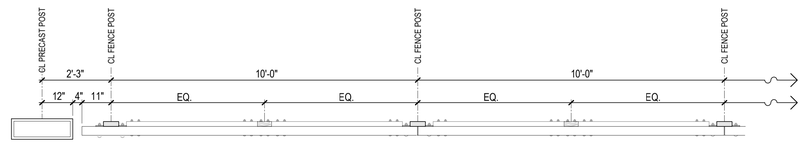

2e PLAN
¾"=1'-0"

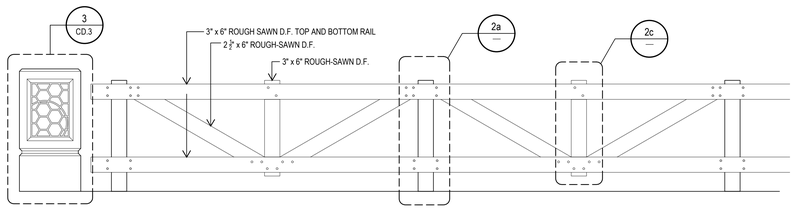

2f ELEVATION
¾"=1'-0"

MATERIAL FINISHES

1. WOOD MATERIAL: TOP, BOTTOM, VERTICAL & DIAGONAL SUPPORTS TO BE DOUG FIR, ROUGH RE-SAWN.

2. WOOD FINISHES: ALL WOODEN MATERIAL TO PAINTED. APPLY ONE (1) PRIMER COAT OF ZINSSER'S BULLS EYE 1,2,3 EXTERIOR PRIMER OR APPROVED EQUIVALENT AND TWO (2) COLOR COATS OF DUNN EDWARDS 'MONTEREY BROWN' #DE6097 OR EQUIVALENT. APPLY PAINT TO WOOD MATERIAL PRIOR TO ASSEMBLING / CONSTRUCTION IN THE FIELD.

3. STEEL POSTS: ALL STEEL POSTS SHALL RECEIVE ONE (1) COAT OF A INDUSTRIAL METAL PRIMER AND TWO (2) FINISH COLOR COATS. COLOR TO MATCH WOOD FENCE COMPONENTS. APPLY PAINT TO STEEL COMPONENTS PRIOR TO ASSEMBLING / CONSTRUCTION IN THE FIELD.

2 POST & RAIL FENCE

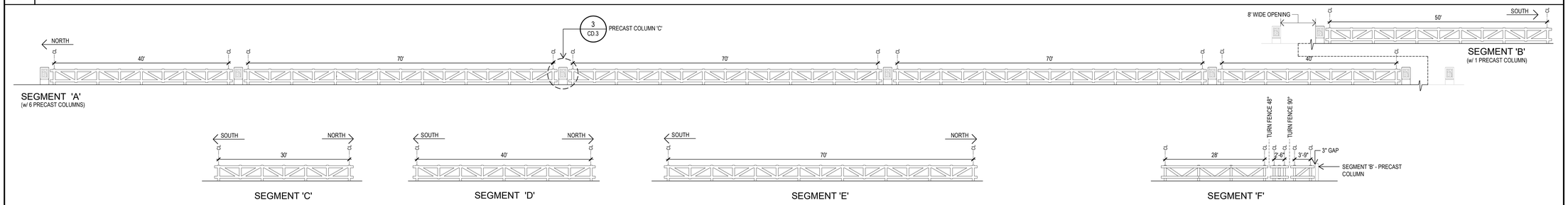

3 POST & RAIL FENCE WITH PRECAST COLUMN - ELEVATIONS

10 SCALE

Landscape Architect:

David Volz Design
Landscape Architecture & Park Planning

Costa Mesa Office:
151 Kalmus Drive, Suite M8
Costa Mesa, CA 92626
Phone: (714) 641-1300
Fax: (714) 641-1323

e-mail: drawings@dvolzdesign.com
www.dvolzdesign.com

Subconsultant:

Seal:

REGISTERED LANDSCAPE ARCHITECT
GARY M. VOLZ
NO. 1883
SIGNATURE
EXP. FEB. 2022
8-5-21
DATE
STATE OF CALIFORNIA

CALL TOLL FREE
811
DIGALERT
UNDERGROUND SERVICE ALERT OF SOUTHERN CALIFORNIA

ATTENTION IS DIRECTED TO THE POSSIBLE EXISTENCE OF UNDERGROUND FACILITIES NOT KNOWN OR IN A LOCATION DIFFERENT FROM THAT WHICH IS SHOWN ON THE PLANS OR IN THE SPECIAL PROVISIONS. THE CONTRACTOR SHALL TAKE ALL PRECAUTIONARY MEASURES TO PROTECT ALL OF THE UNDERGROUND FACILITIES PRIOR TO DOING WORK THAT MAY DAMAGE SUCH FACILITIES OR INTERFERE WITH THEIR SERVICE.

BEFORE EXCAVATING, THE CONTRACTOR SHALL VERIFY THE LOCATION OF UNDERGROUND UTILITIES BY CONTRACTING UNDERGROUND SERVICE ALERT. CALL TOLL FREE 811.

Revisions:

No.	Date	Revisions	By

Project :
JACK HAMMETT SPORTS COMPLEX
LANDSCAPE, PARKING LOT EXPANSION & BUILDING IMPROVEMENTS
2750 FAIRVIEW ROAD

Owner:
City of Costa Mesa

Project No :	21-05
Drawn By :	PC / LP
Checked By :	GV
Date :	JULY, 2021
Scale :	AS SHOWN

Drawing Title :

CONSTRUCTION DETAILS

Drawing No :

CD.1

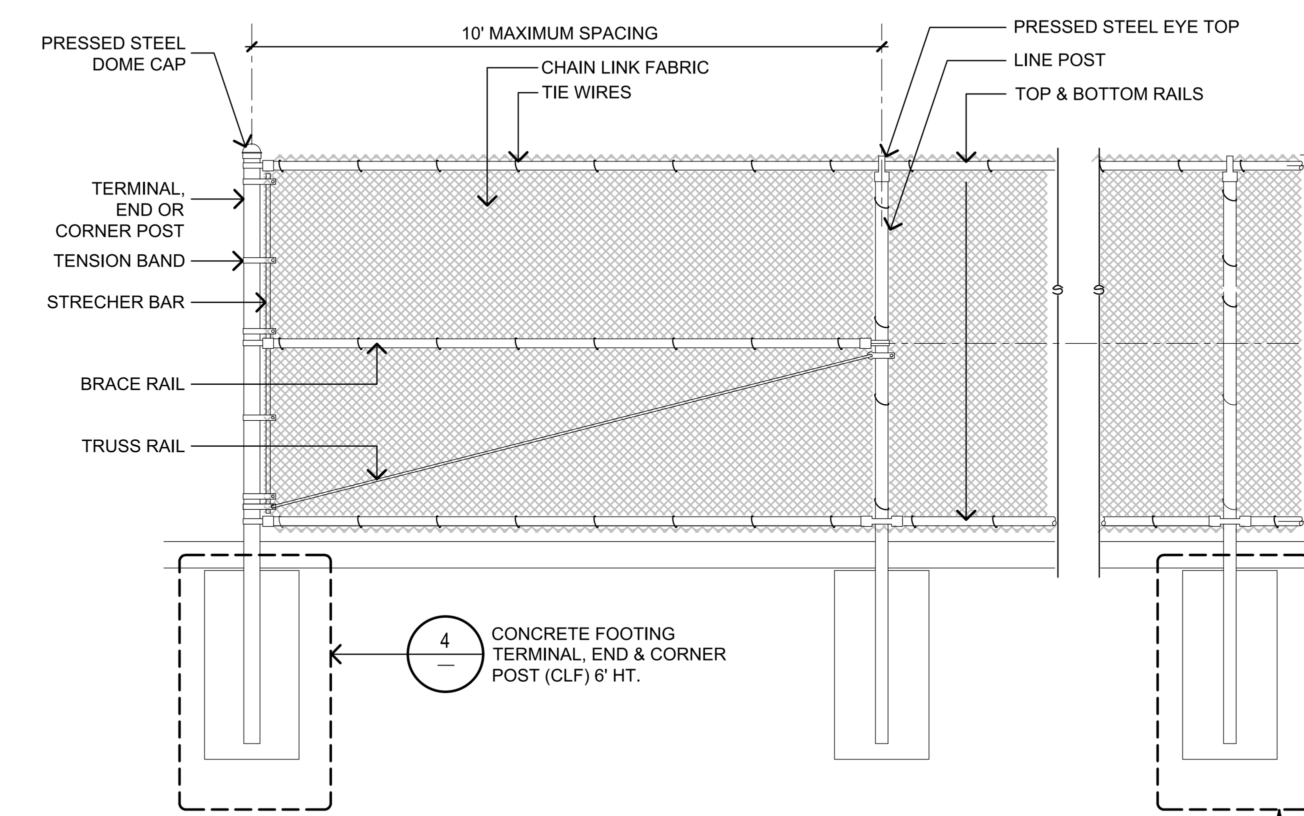

6' HIGH CHAIN LINK FENCE
SPECIFICATIONS

FABRIC: $1\frac{1}{4}$" MESH, PVC COLOR COATED FABRIC (CLASS 2b FUSED & ADHERED) 9 GA. CORE, 8 GA. FINISH. 72 INCHES HIGH, KNUCKLE SELVAGE TOP AND BOTTOM

TOP, MID & BOTTOM RAILS: $1\frac{5}{8}$", 9 GA. PIPE, 21' LENGTHS JOINED WITH $1\frac{5}{8}$" x 6" LONG SLEEVE

BRACE RAIL: END POSTS TO BE BRACED AND TRUSSED TO THE NEAREST LINE POST WITH $1\frac{5}{8}$" O.D. SCH. 40 PIPE AND $\frac{3}{8}$" TRUSS ROD AND TRUSS TIGHTNER.

LINE POST: SIZE: $2\frac{3}{8}$" (2.067 I.D.)

TERMINAL, END & CORNER POSTS: SIZE: $2\frac{7}{8}$" SCHEDULE 40 (2.469 I.D.)

FITTINGS: $\frac{1}{8}$" x 1" HEAVY TENSION BANDS @ 15" O.C , $\frac{1}{4}$"x$\frac{3}{4}$" TENSION BAR, PRESSED STEEL LOOP CAPS, PRESSED STEEL CAPS AND RAIL ENDS

TIE WIRES: 9 GA. HOOKED TIES SPACED 14" O.C. FOR POST & 18" O.C. FOR RAILS

FINISH: ALL FENCING COMPONENTS (FABRIC, POSTS, RAILS AND FITTINGS) TO BE A COLORED PVC POLYMER FINISH. COLOR TO BE BLACK. PAINTED FITTINGS ARE NOT ACCEPTABLE

CONCRETE FOOTING: 3000 P.S.I. READY MIX

NOTE:
SUBMIT SHOP DRAWINGS INDICATING ALL MATERIAL SIZES AND FINISHES FOR POSTS, FABRIC AND FITTINGS FOR REVIEW AND APPROVAL PRIOR TO INSTALLATION.

3 CHAIN LINK FENCE - 6' HIGH $\frac{1}{2}$"=1'-0"

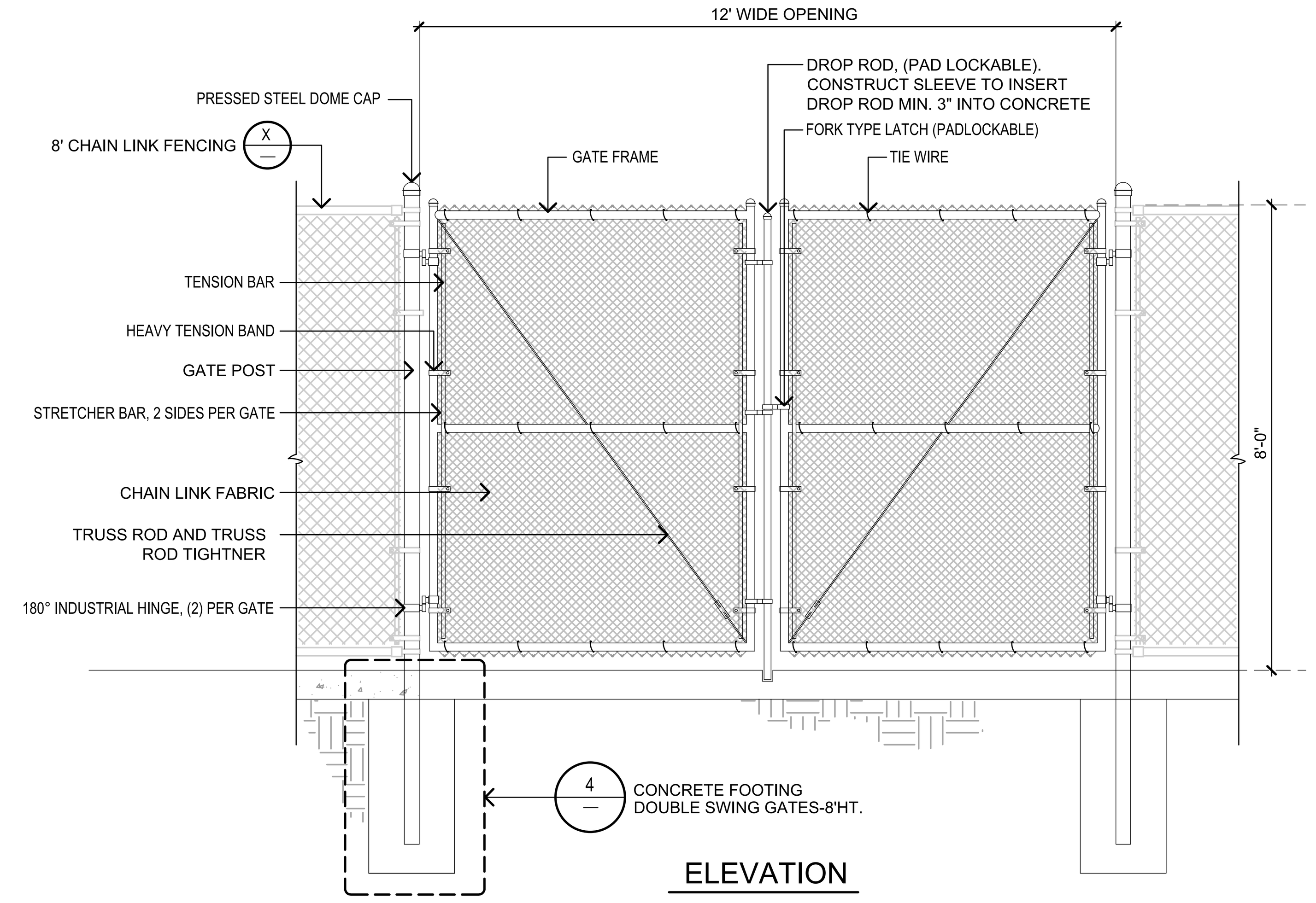

ELEVATION

DOUBLE SWING CHAIN LINK GATE
SPECIFICATIONS

FABRIC: $1\frac{1}{4}$" MESH, PVC COLOR COATED FABRIC (CLASS 2b FUSED & ADHERED) 9 GA. CORE, 8 GA. FINISH. 96" HIGH, KNUCKLE SELVAGE TOP AND BOTTOM

FRAMEWORK: $1\frac{7}{8}$" SCHEDULE 40 PIPE

GATE POST: SIZE: 4" SCHEDULE 40

FITTINGS: $\frac{1}{8}$" x 1" HEAVY TENSION BANDS, $\frac{1}{4}$"x$\frac{3}{4}$" TENSION BARS, STRECHER BARS, PRESSED STEEL DOME CAPS, $\frac{3}{8}$" TENSION ROD AND TRUSS ROD TIGHTNER.

FINISH: ALL FENCING COMPONENTS (FABRIC, POSTS, RAILS AND FITTINGS) TO BE A COLORED PVC POLYMER FINISH. COLOR TO BE BLACK. PAINTED FITTINGS ARE NOT ACCEPTABLE

CONCRETE FOOTING: 3000 P.S.I. READY MIX

NOTE:

SUBMIT SHOP DRAWINGS INDICATING ALL MATERIAL SIZES AND FINISHES FOR POSTS, GATE FRAMEWORK, LATCH, HINGES AND FITTINGS FOR REVIEW AND APPROVAL PRIOR TO INSTALLATION.

2 DOUBLE SWING GATE (C.L.F.) - 8' HIGH $\frac{1}{2}$"=1'-0"

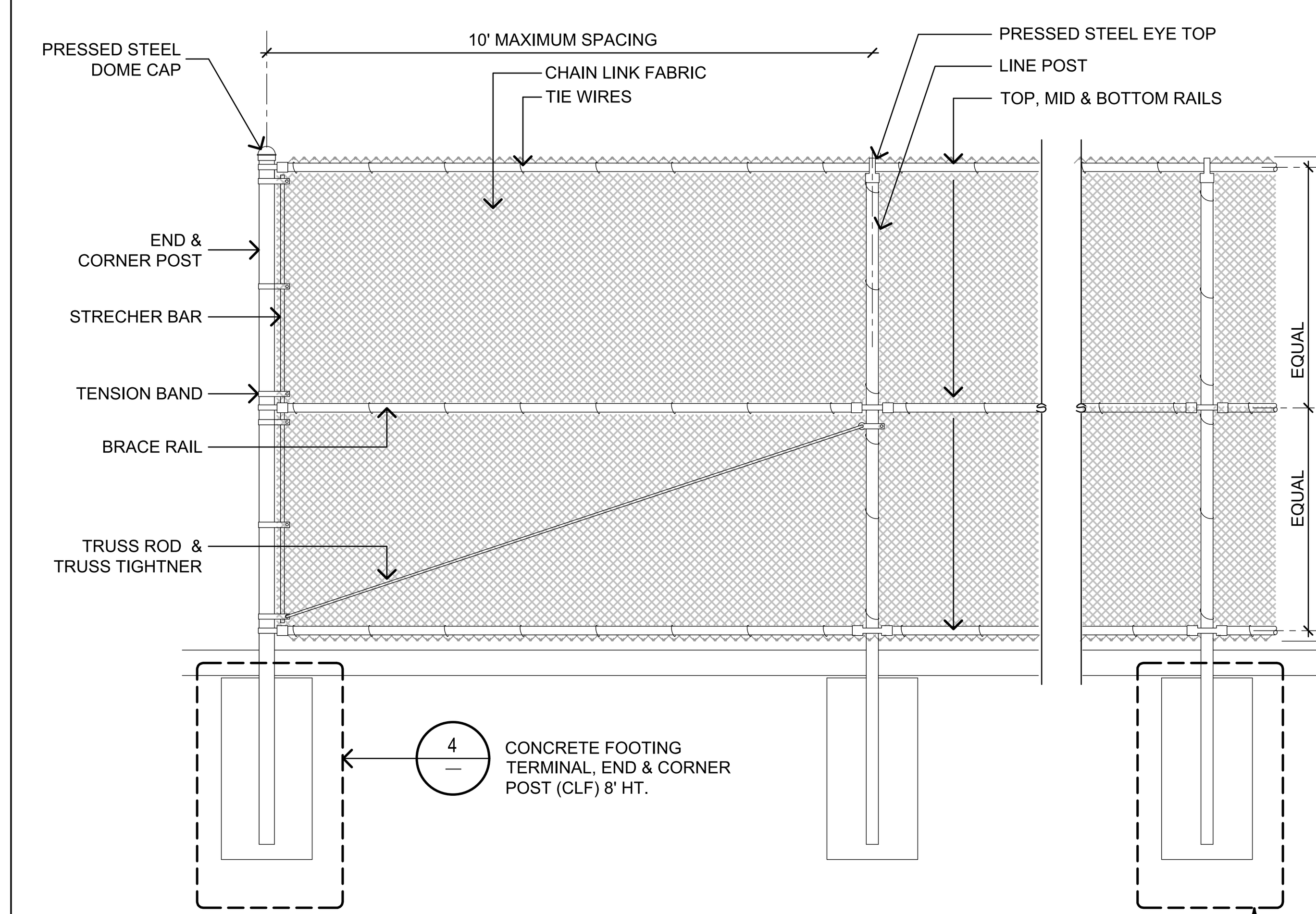

8' HIGH CHAIN LINK FENCE
SPECIFICATIONS

FABRIC: $1\frac{1}{4}$" MESH, PVC COLOR COATED FABRIC (CLASS 2b FUSED & ADHERED) 9 GA. CORE, 8 GA. FINISH. 96 INCHES HIGH, KNUCKLE SELVAGE TOP AND BOTTOM

TOP-MID-BOTTOM RAILS: $1\frac{5}{8}$" SCH 40 PIPE, 2.27 LBS. PER FOOT, 21' LENGTHS JOINED WITH $1\frac{5}{8}$" x 6" LONG SLEEVE

BRACE RAIL: END POSTS TO BE BRACED AND TRUSSED TO THE NEAREST LINE POST WITH $1\frac{5}{8}$" O.D. SCH. 40 PIPE AND $\frac{3}{8}$" TRUSS ROD AND TRUSS ROD TIGHTNER

LINE POST: SIZE: $2\frac{3}{8}$" (2.067 I.D.)

TERMINAL, END & CORNER POST: SIZE: 4" O.D.

FITTINGS: $\frac{1}{8}$" x 1" HEAVY TENSION BANDS, $\frac{3}{16}$"x$\frac{3}{4}$" TENSION BAR, PRESSED STEEL LOOP CAPS, PRESSED STEEL CAPS AND RAIL ENDS, $\frac{1}{4}$" x $\frac{3}{4}$" AND TENSION BARS

TIE WIRES: 9 GA. HOOKED TIES SPACED 16" O.C.

FINISH: ALL FENCING COMPONENTS (FABRIC, POSTS, RAILS AND FITTINGS) TO BE A COLORED PVC POLYMER FINISH. COLOR TO BE BLACK. PAINTED FITTINGS ARE NOT ACCEPTABLE

CONCRETE FOOTING: 3000 P.S.I. READY MIX

NOTE:
SUBMIT SHOP DRAWINGS INDICATING ALL MATERIAL SIZES AND FINISHES FOR POSTS, FABRIC AND FITTINGS FOR REVIEW AND APPROVAL PRIOR TO INSTALLATION.

1 CHAIN LINK FENCE - 8' HIGH $\frac{1}{2}$"=1'-0"

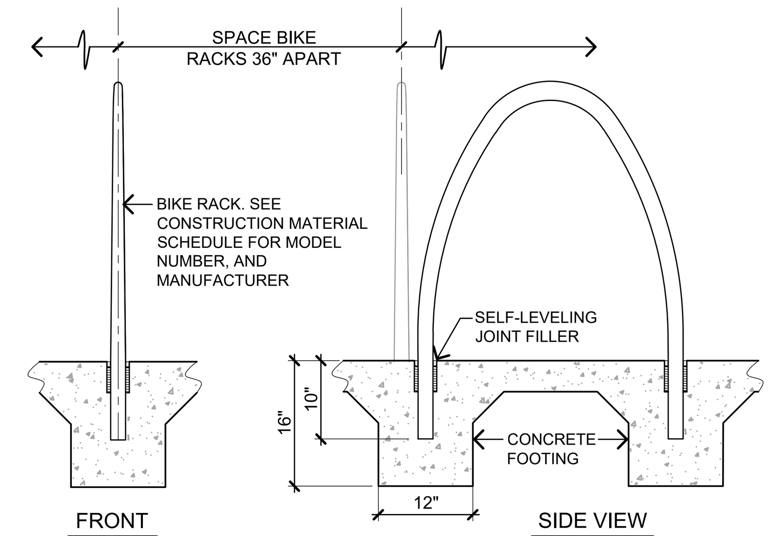

9 BIKE RACK INSTALLATION $\frac{1}{2}$"=1'-0"

NOT USED

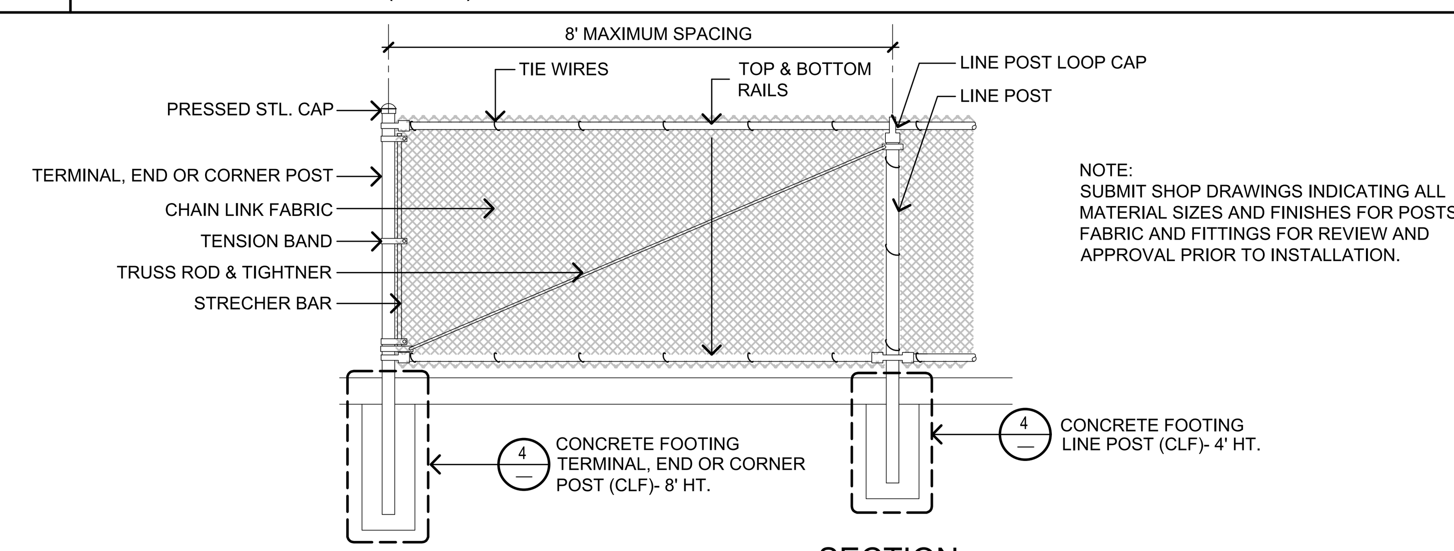

NOTE:
SUBMIT SHOP DRAWINGS INDICATING ALL MATERIAL SIZES AND FINISHES FOR POSTS, FABRIC AND FITTINGS FOR REVIEW AND APPROVAL PRIOR TO INSTALLATION.

SECTION

4' HIGH CHAIN LINK FENCE
SPECIFICATIONS

FABRIC: $1\frac{1}{4}$" MESH, PVC COLOR COATED FABRIC (CLASS 2b FUSED & ADHERED) 9 GA. CORE, 8 GA. FINISH. 48" HIGH, KNUCKLE SELVAGE TOP AND BOTTOM

TOP & BOTTOM RAILS: SIZE: $1\frac{5}{8}$" (1.625 O.D.)

LINE POST: SIZE: $1\frac{7}{8}$" O.D.

TERMINAL, END OR CORNER POST: SIZE: $2\frac{3}{8}$" O.D.

FITTINGS: $\frac{1}{8}$" x 1" TENSION BANDS, $\frac{3}{16}$"x$\frac{3}{4}$" TENSION BAR, PRESSED STEEL LOOP CAPS, PRESSED STEEL CAPS AND RAIL ENDS, $\frac{1}{4}$" x $\frac{3}{4}$" AND TENSION BARS

TIE WIRES: 9 GA. HOOKED TIES SPACED 16" O.C.

FINISH: ALL FENCING COMPONENTS (FABRIC, POSTS, RAILS AND FITTINGS) RO BE A COLORED PVC POLYMER FINISH. COLOR TO BE BLACK. PAINTED FITTINGS ARE NOT ACCEPTABLE

BRACING: END POSTS TO BE BRACED TO THE NEAREST LINE POST WITH $\frac{3}{8}$" TRUSS ROD AND TRUSS ROD TIGHTENER

CONCRETE FOOTING: 3000 P.S.I. READY MIX

6 CHAIN LINK FENCE - 4' HIGH $\frac{1}{2}$"=1'-0"

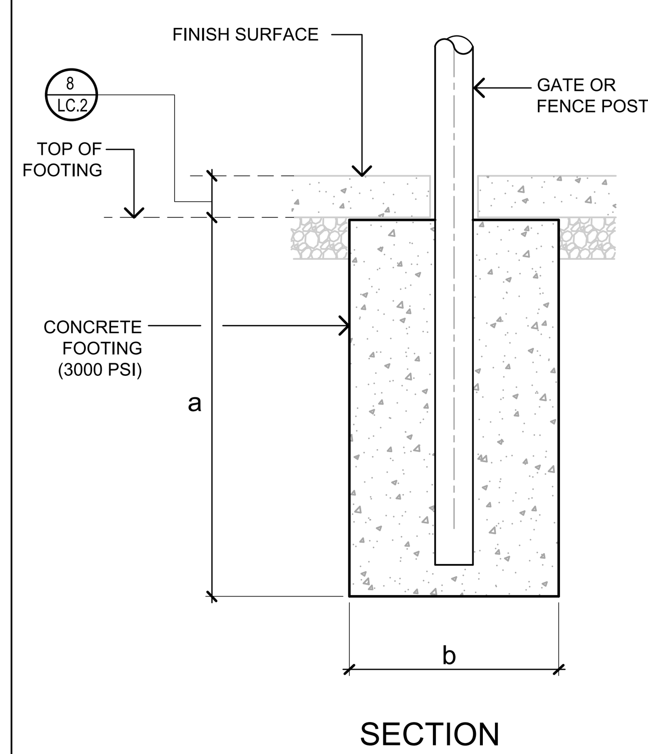

SECTION

POST FOOTING DIMENSIONS - CHAIN LINK FENCE

CONCRETE FOOTING SIZE CHART

	a	b
DOUBLE SWING (CLF) GATE- 8' HT.	48"	20" DIA.
SINGLE SWING (CLF) GATE- 8' HT.	48"	18" DIA.
TERMINAL, END OR CORNER POST - FENCE (CLF)- 8' HT.	48"	16" DIA.
LINE POST - FENCE (CLF)- 8' HT.	48"	12" DIA.
TERMINAL, END OR CORNER POST - FENCE (CLF)- 6' HT.	48"	12" DIA.
LINE POST - FENCE (CLF)- 6' HT.	42"	12" DIA.
TERMINAL, END OR CORNER POST - FENCE (CLF)- 4' HT.	42"	12" DIA.
LINE POST - FENCE (CLF)- 4' HT.	36"	12" DIA.
NETTING POST - 18.5' HT.	72"	30" DIA.

4 CONCRETE FOOTING DIMENSIONS

NOT USED

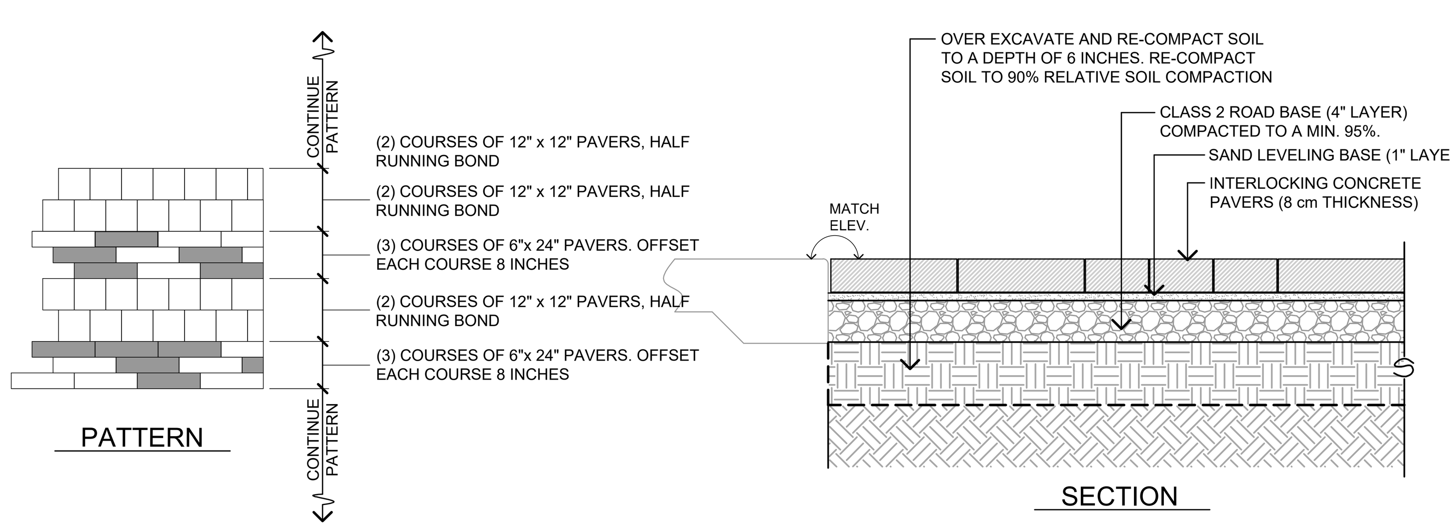

PATTERN

SECTION

INTERLOCKING CONCRETE PAVERS

1. THE CONTRACTOR SHALL PROVIDE PAVER SAMPLES FOR THE CITY'S REVIEW AND APPROVAL.

2. REFER TO CONSTRUCTION MATERIALS SCHEDULE SHEET LC.1 FOR CONCRETE PAVER MANUFACTURER. COLOR, SIZES, TEXTURE AND FINISH.

3. CONCRETE PAVERS SHALL SEALED WITH AND APPROVED SEALER, AND APPLIED AS SPECIFIED BY THE SEALER'S MANUFACTURE. THE COST TO PROVIDE LABOR AND MATERIALS TO PERFORM THIS WORK WILL BE CONSIDERED INCLUDED IN THE CONTRACT UNIT COST FOR CONCRETE PAVERS.

4. FILL JOINTS SOLID USING SAND STABILIZER SB-1300 AS MANUFACTURED BY SUREBOND OR APPROVED EQUIVALENT.

NOT USED

NOT USED

7 INTERLOCKING CONCRETE PAVERS 1"=1'-0"

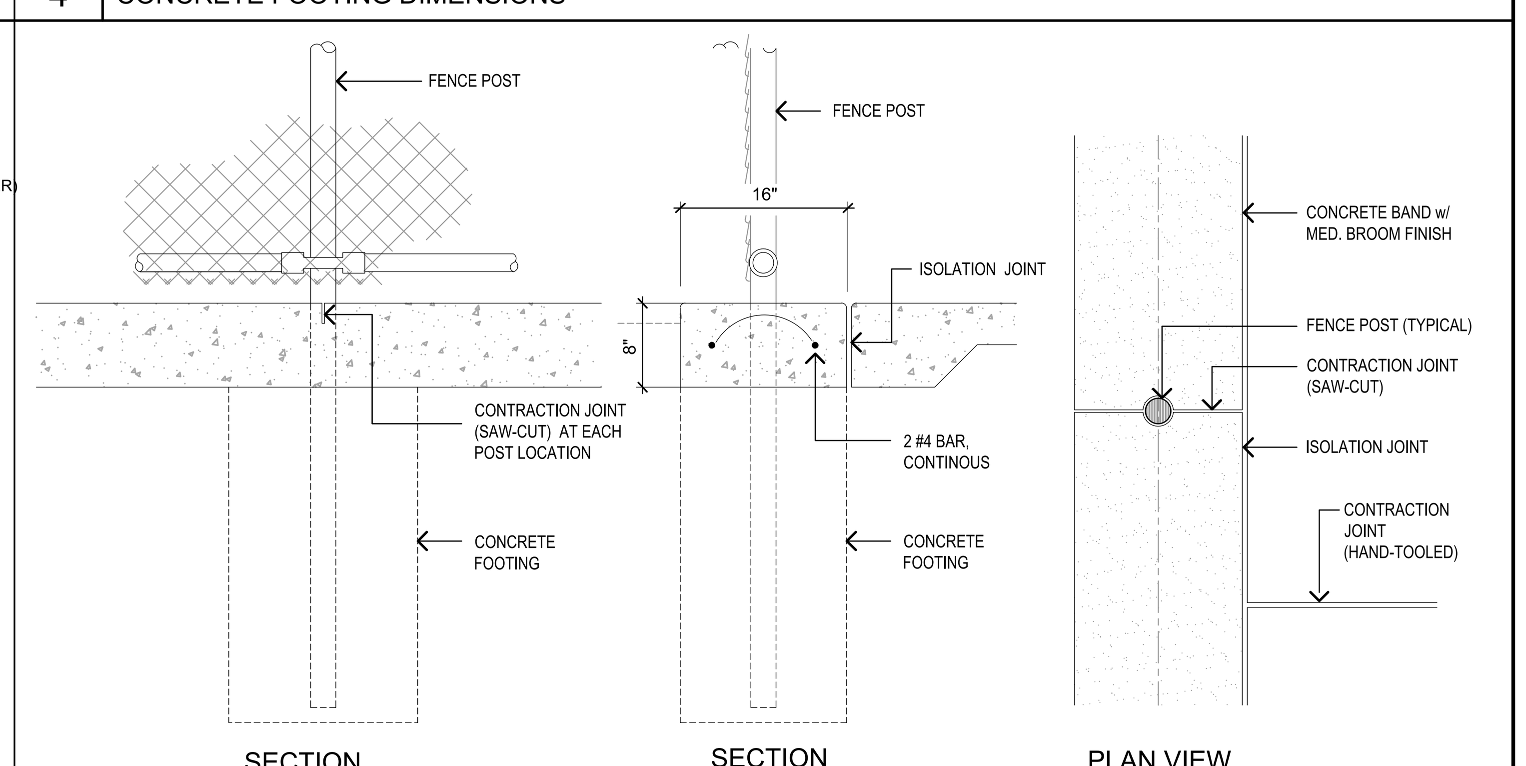

5 THICKEN CONCRETE BAND AND CONCRETE JOINTS @ C.L.F (6' HT.) 1"=1'-0"

Landscape Architect:

David Volz Design
Landscape Architecture & Park Planning

Costa Mesa Office:
151 Kalmus Drive, Suite M8
Costa Mesa, CA 92626
Phone: (714) 641-1300
Fax: (714) 641-1323

e-mail: drawings@dvolzdesign.com
www.dvolzdesign.com

Subconsultant:

Seal:

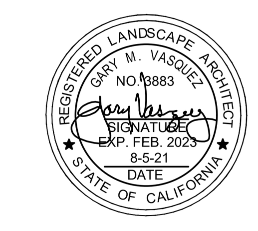

CALL TOLL FREE
811
DIGALERT

UNDERGROUND SERVICE ALERT OF SOUTHERN CALIFORNIA

ATTENTION IS DIRECTED TO THE POSSIBLE EXISTENCE OF UNDERGROUND FACILITIES NOT KNOWN OR IN A LOCATION DIFFERENT FROM THAT WHICH IS SHOWN ON THE PLANS OR IN THE SPECIAL PROVISIONS. THE CONTRACTOR SHALL TAKE STEPS TO ASCERTAIN THE EXACT LOCATION OF ALL UNDERGROUND FACILITIES PRIOR TO DOING WORK THAT MAY DAMAGE SUCH FACILITIES OR INTERFERE WITH THEIR SERVICE.

BEFORE EXCAVATING, THE CONTRACTOR SHALL VERIFY THE LOCATION OF UNDERGROUND UTILITIES BY CONTRACTING UNDERGROUND SERVICE ALERT. CALL TOLL FREE 811.

Revisions:

No.	Date	Revisions	By

Project :
JACK HAMMETT SPORTS COMPLEX
LANDSCAPE, PARKING LOT EXPANSION & BUILDING IMPROVEMENTS
2750 FAIRVIEW ROAD

Owner:
City of Costa Mesa

Project No :	21-05
Drawn By :	PC / LP
Checked By :	GV
Date :	JULY, 2021
Scale :	AS SHOWN

Drawing Title :
CONSTRUCTION DETAILS

Drawing No :
CD.2

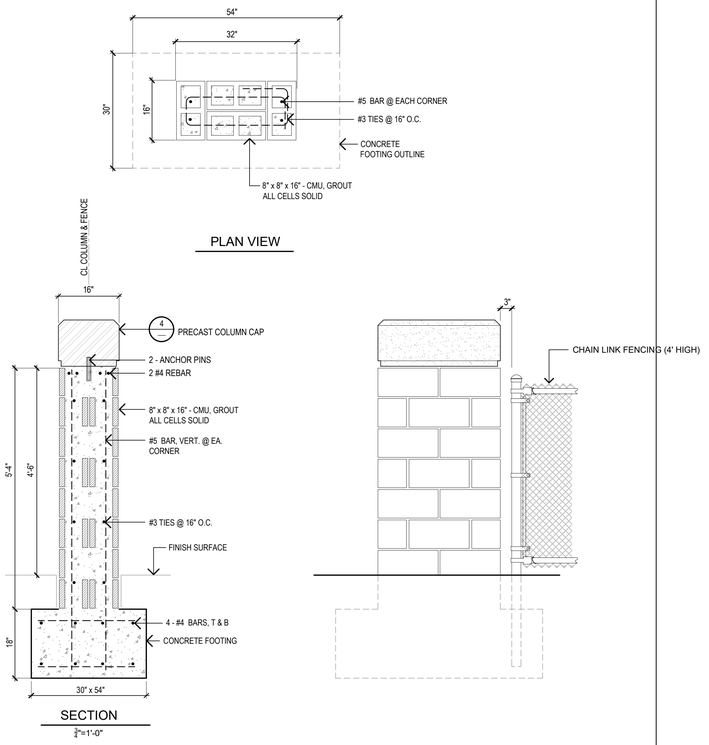

2 MASONRY COLUMN 'B' w/ PRECAST COLUMN CAP 3/4"=1'-0"

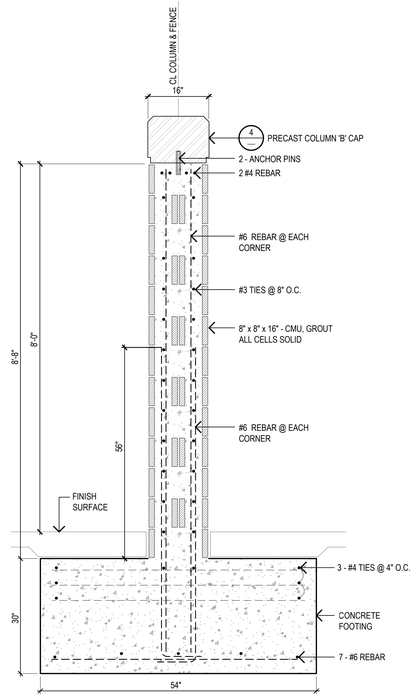

1 MASONRY COLUMN 'A' w/ PRECAST COLUMN CAP 3/4"=1'-0"

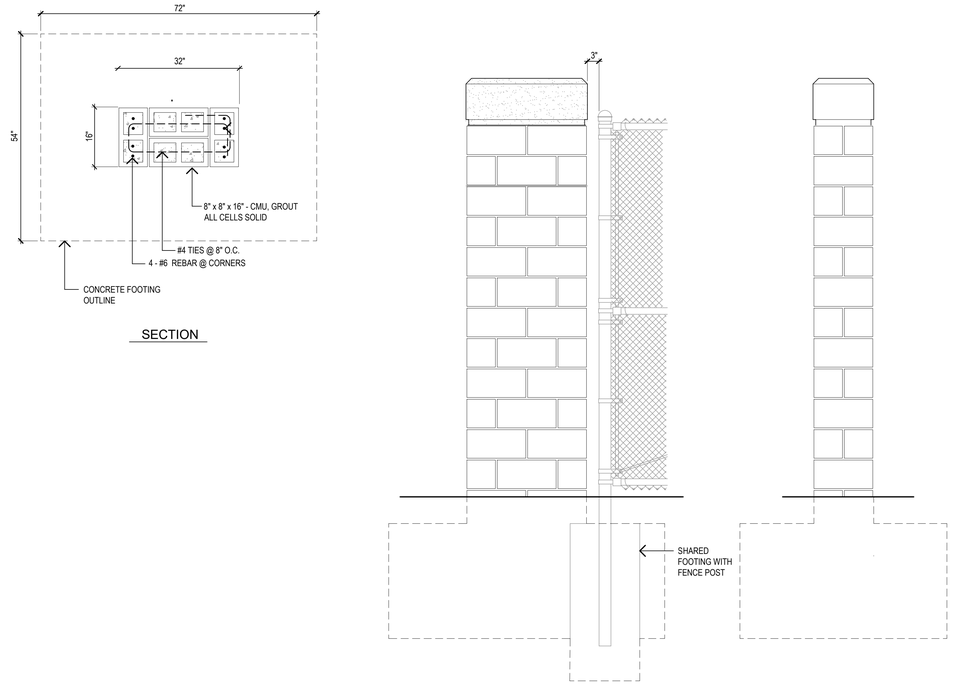

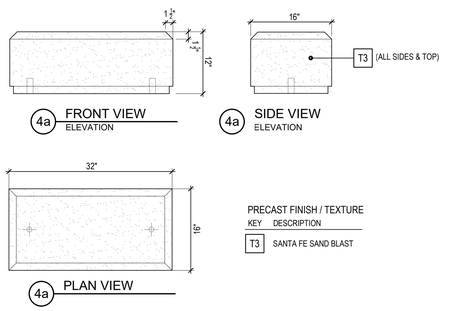

PRECAST FINISH / TEXTURE

KEY	DESCRIPTION
T3	SANTA FE SAND BLAST

PRECAST COLUMN 'B' CAP

MODEL NUMBER: CUSTOM
COLOR: HARVEST
SEALER: MATTE SEALER (MT)
MANUFACTURER: QCP OR EQUIVALENT
PHONE: (800) 230-1377

SUBMIT SHOP DRAWINGS FOR THE LANDSCAPE ARCHITECT'S REVIEW AND APPROVAL.

4 PRECAST COLUMN CAP FOR COLUMNS 'A' & 'B'

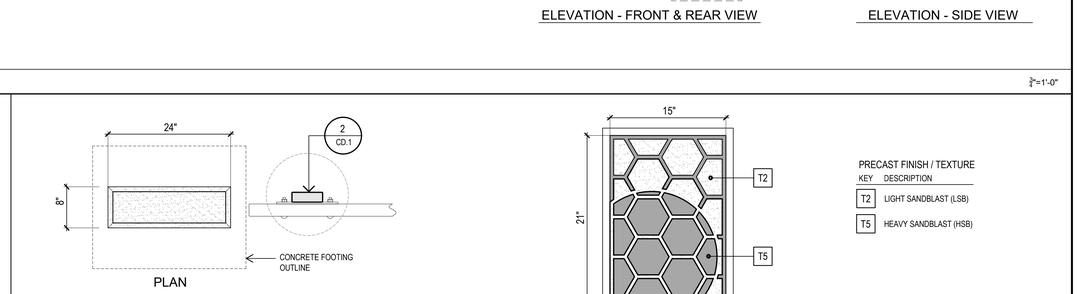

PRECAST FINISH / TEXTURE

KEY	DESCRIPTION
T2	LIGHT SANDBLAST (LSB)
T5	HEAVY SANDBLAST (HSB)

PRECAST POST

MODEL NUMBER: CUSTOM
COLOR: LATTE
FINISH / TEXTURE: HEAVY SANDBLAST (T-5) & LIGHT SANDBLAST (T-2)
SEALER: MATTE SEALER (MT)
MANUFACTURER: QCP OR EQUIVALENT
PHONE: (800) 230-1377

3 PRECAST COLUMN 'C' 1"=1'-0"

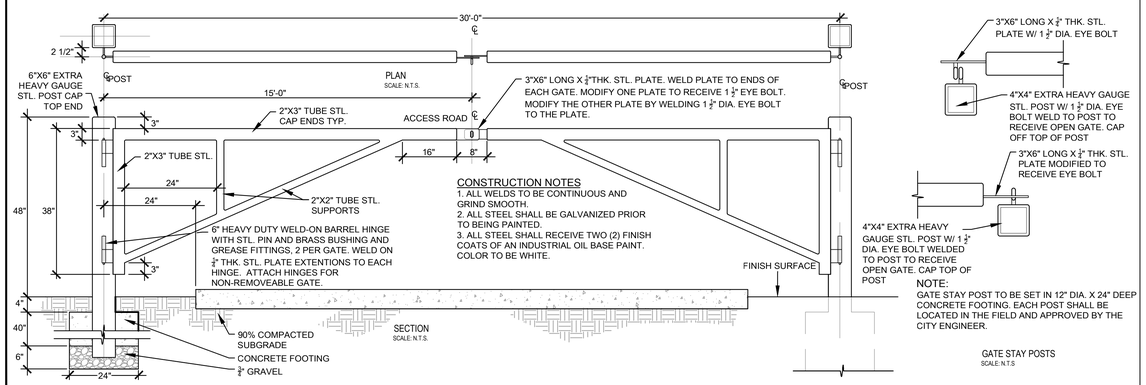

CONSTRUCTION NOTES
1. ALL WELDS TO BE CONTINOUS AND GRIND SMOOTH.
2. ALL STEEL SHALL BE GALVANIZED PRIOR TO BEING PAINTED.
3. ALL STEEL SHALL RECEIVE TWO (2) FINISH COATS OF AN INDUSTRIAL OIL BASE PAINT. COLOR TO BE WHITE.

NOTE:
GATE STAY POST TO BE SET IN 12" DIA. X 24" DEEP CONCRETE FOOTING. EACH POST SHALL BE LOCATED IN THE FIELD AND APPROVED BY THE CITY ENGINEER.

5 DOUBLE PARKING LOT BARRIER GATES

Landscape Architect:

David Volz Design
Landscape Architecture & Park Planning

Costa Mesa Office:
151 Kalmus Drive, Suite M8
Costa Mesa, CA 92626
Phone: (714) 641-1300
Fax: (714) 641-1323

e-mail: drawings@dvolzdesign.com
www.dvolzdesign.com

Subconsultant:

Seal:

REGISTERED LANDSCAPE ARCHITECT
GARY M. VASQUEZ
NO. 3883
SIGNATURE
EXP. FEB. 2020
8-5-21
DATE
STATE OF CALIFORNIA

CALL TOLL FREE
811
DIGALERT

UNDERGROUND SERVICE ALERT OF SOUTHERN CALIFORNIA

ATTENTION IS DIRECTED TO THE POSSIBLE EXISTENCE OF UNDERGROUND FACILITIES NOT KNOWN OR IN A LOCATION DIFFERENT FROM THAT WHICH IS SHOWN ON THE PLANS OR IN THE SPECIAL PROVISIONS. THE CONTRACTOR SHALL TAKE ALL PRECAUTIONARY MEASURES TO PROTECT ALL UNDERGROUND FACILITIES PRIOR TO DOING WORK THAT MAY DAMAGE SUCH FACILITIES OR INTERFERE WITH THEIR SERVICE.

BEFORE EXCAVATING, THE CONTRACTOR SHALL VERIFY THE LOCATION OF UNDERGROUND UTILITIES BY CONTRACTING UNDERGROUND SERVICE ALERT. CALL TOLL FREE 811.

Revisions:

No.	Date	Revisions	By

Project :
JACK HAMMETT SPORTS COMPLEX
LANDSCAPE, PARKING LOT EXPANSION & BUILDING IMPROVEMENTS
2750 FAIRVIEW ROAD

Owner:
City of Costa Mesa

Project No :	21-05
Drawn By :	PC / LP
Checked By :	GV
Date :	JULY, 2021
Scale :	AS SHOWN

Drawing Title :
CONSTRUCTION DETAILS

Drawing No :
CD.3

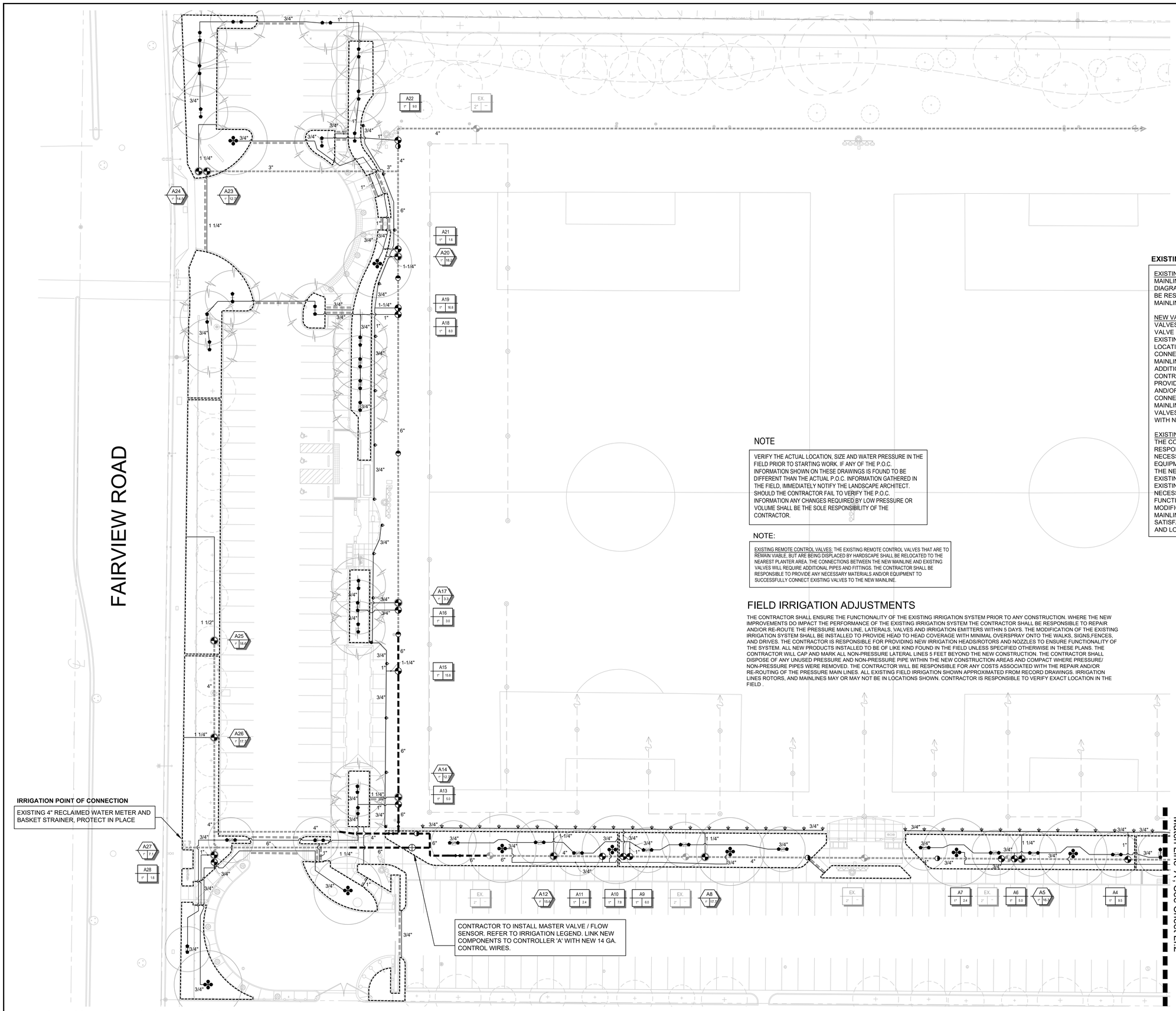

IRRIGATION POINT OF CONNECTION

EXISTING 4" RECLAIMED WATER METER AND BASKET STRAINER, PROTECT IN PLACE

CONTRACTOR TO INSTALL MASTER VALVE / FLOW SENSOR. REFER TO IRRIGATION LEGEND. LINK NEW COMPONENTS TO CONTROLLER 'A' WITH NEW 14 GA. CONTROL WIRES.

EXISTING MAINLINE NOTES:

EXISTING MAINLINE: THE EXISTING MAINLINE IS SHOWN TO BE DIAGRAMMATIC. THE CONTRACTOR SHALL BE RESPONSIBLE TO FIELD VERIFY THE MAINLINE'S ACTUAL LOCATION.

NEW VALVES: THE NEW REMOTE CONTROL VALVES SHALL BE INSTALLED IN NEW VALVE BOXES AND CONNECTED TO THE EXISTING MAINLINE AT THE APPROXIMATE LOCATION SHOWN ON PLANS. THE CONNECTIONS BETWEEN THE EXISTING MAINLINE AND NEW VALVES WILL REQUIRE ADDITIONAL PIPES AND FITTINGS. THE CONTRACTOR SHALL BE RESPONSIBLE TO PROVIDE ANY NECESSARY MATERIALS AND/OR EQUIPMENT TO SUCCESSFULLY CONNECT NEW VALVES TO EXISTING MAINLINE. LINK NEW REMOTE CONTROL VALVES TO THE EXISTING CONTROLLERS WITH NEW CONTROL WIRES.

EXISTING MAINLINE MODIFICATIONS: THE CONTRACTOR SHALL BE RESPONSIBLE TO PROVIDE ANY NECESSARY MATERIALS AND/OR EQUIPMENT TO SUCCESSFULLY CONNECT THE NEW IRRIGATION SYSTEM TO EXISTING MAINLINE. REPAIR/REPLACE EXISTING MAINLINE AND FITTINGS AS NECESSARY TO ENSURE PROPER FUNCTION OF THE SYSTEM. MODIFICATIONS TO THE EXISTING MAINLINE SHALL BE MADE TO THE SATISFACTION OF THE CITY ENGINEER AND LOCAL WATER PURVEYOR.

NOTE

VERIFY THE ACTUAL LOCATION, SIZE AND WATER PRESSURE IN THE FIELD PRIOR TO STARTING WORK. IF ANY OF THE P.O.C. INFORMATION SHOWN ON THESE DRAWINGS IS FOUND TO BE DIFFERENT THAN THE ACTUAL P.O.C. INFORMATION GATHERED IN THE FIELD, IMMEDIATELY NOTIFY THE LANDSCAPE ARCHITECT. SHOULD THE CONTRACTOR FAIL TO VERIFY THE P.O.C. INFORMATION ANY CHANGES REQUIRED BY LOW PRESSURE OR VOLUME SHALL BE THE SOLE RESPONSIBILITY OF THE CONTRACTOR.

NOTE:

EXISTING REMOTE CONTROL VALVES: THE EXISTING REMOTE CONTROL VALVES THAT ARE TO REMAIN VIABLE, BUT ARE BEING DISPLACED BY HARDSCAPE SHALL BE RELOCATED TO THE NEAREST PLANTER AREA. THE CONNECTIONS BETWEEN THE NEW MAINLINE AND EXISTING VALVES WILL REQUIRE ADDITIONAL PIPES AND FITTINGS. THE CONTRACTOR SHALL BE RESPONSIBLE TO PROVIDE ANY NECESSARY MATERIALS AND/OR EQUIPMENT TO SUCCESSFULLY CONNECT EXISTING VALVES TO THE NEW MAINLINE.

FIELD IRRIGATION ADJUSTMENTS

THE CONTRACTOR SHALL ENSURE THE FUNCTIONALITY OF THE EXISTING IRRIGATION SYSTEM PRIOR TO ANY CONSTRUCTION. WHERE THE NEW IMPROVEMENTS DO IMPACT THE PERFORMANCE OF THE EXISTING IRRIGATION SYSTEM THE CONTRACTOR SHALL BE RESPONSIBLE TO REPAIR AND/OR RE-ROUTE THE PRESSURE MAIN LINE, LATERALS, VALVES AND IRRIGATION EMITTERS WITHIN 5 DAYS. THE MODIFICATION OF THE EXISTING IRRIGATION SYSTEM SHALL BE INSTALLED TO PROVIDE HEAD TO HEAD COVERAGE WITH MINIMAL OVERSPRAY ONTO THE WALKS, SIGNS,FENCES, AND DRIVES. THE CONTRACTOR IS RESPONSIBLE FOR PROVIDING NEW IRRIGATION HEADS/ROTORS AND NOZZLES TO ENSURE FUNCTIONALITY OF THE SYSTEM. ALL NEW PRODUCTS INSTALLED TO BE OF LIKE KIND FOUND IN THE FIELD UNLESS SPECIFIED OTHERWISE IN THESE PLANS. THE CONTRACTOR WILL CAP AND MARK ALL NON-PRESSURE LATERAL LINES 5 FEET BEYOND THE NEW CONSTRUCTION. THE CONTRACTOR SHALL DISPOSE OF ANY UNUSED PRESSURE AND NON-PRESSURE PIPE WITHIN THE NEW CONSTRUCTION AREAS AND COMPACT WHERE PRESSURE/ NON-PRESSURE PIPES WERE REMOVED. THE CONTRACTOR WILL BE RESPONSIBLE FOR ANY COSTS ASSOCIATED WITH THE REPAIR AND/OR RE-ROUTING OF THE PRESSURE MAIN LINES. ALL EXISTING FIELD IRRIGATION SHOWN APPROXIMATED FROM RECORD DRAWINGS. IRRIGATION LINES ROTORS, AND MAINLINES MAY OR MAY NOT BE IN LOCATIONS SHOWN. CONTRACTOR IS RESPONSIBLE TO VERIFY EXACT LOCATION IN THE FIELD .

REFER TO THE COVER SHEET FOR GENERAL NOTES
REFER TO SHEET LI.2 FOR IRRIGATION LEGEND AND NOTES

Landscape Architect:

David Volz Design
Landscape Architecture & Park Planning

Costa Mesa Office:
151 Kalmus Drive, Suite M8
Costa Mesa, CA 92626
Phone: (714) 641-1300
Fax: (714) 641-1323

e-mail: drawings@dvolzdesign.com
www.dvolzdesign.com

Subconsultant:

Seal:

REGISTERED LANDSCAPE ARCHITECT
GARY M. VAGNINI
NO. 3883
SIGNATURE
EXP. FEB. 2022
8-5-21
DATE
STATE OF CALIFORNIA

CALL TOLL FREE
811
DIGALERT
UNDERGROUND SERVICE ALERT OF SOUTHERN CALIFORNIA

ATTENTION IS DIRECTED TO THE POSSIBLE EXISTENCE OF UNDERGROUND FACILITIES NOT KNOWN OR IN A LOCATION DIFFERENT FROM THAT WHICH IS SHOWN ON THE PLANS OR IN THE SPECIAL PROVISIONS. THE CONTRACTOR SHALL TAKE STEPS TO ASCERTAIN THE EXACT LOCATION OF ALL UNDERGROUND FACILITIES PRIOR TO DOING WORK THAT MAY DAMAGE SUCH FACILITIES OR INTERFERE WITH THEIR SERVICE.

BEFORE EXCAVATING, THE CONTRACTOR SHALL VERIFY THE LOCATION OF UNDERGROUND UTILITIES BY CONTRACTING UNDERGROUND SERVICE ALERT . CALL TOLL FREE 811.

Revisions:

No.	Date	Revisions	By

Project :
JACK HAMMETT SPORTS COMPLEX
LANDSCAPE, PARKING LOT EXPANSION & BUILDING IMPROVEMENTS
2750 FAIRVIEW ROAD

Owner:
City of Costa Mesa

Project No :	21-05
Drawn By :	PC / LP
Checked By :	GV
Date :	JULY, 2021
Scale :	AS SHOWN

Drawing Title :

IRRIGATION PLAN

Drawing No :

LI.1

GENERAL IRRIGATION NOTES

1. IT IS THE RESPONSIBILITY OF THE IRRIGATION CONTRACTOR TO FAMILIARIZE HIMSELF WITH ALL GRADE DIFFERENCES, LOCATION OF WALL, RETAINING WALLS, STRUCTURES AND UTILITIES. THE CONTRACTOR SHALL REPAIR OR REPLACE, AT NO ADDITIONAL COST TO THE CITY, ALL ITEMS DAMAGED BY HIS WORK. THE CONTRACTOR SHALL COORDINATE HIS WORK WITH OTHER CONTRACTORS FOR THE LOCATION AND INSTALLATION OF PIPE SLEEVES AND LATERALS THROUGH WALLS, UNDER ROADWAYS AND PAVING, ETC.

2. THE CONTRACTOR SHALL NOT WILLFULLY INSTALL THE IRRIGATION SYSTEM AS SHOWN ON THE DRAWINGS WHEN IT IS OBVIOUS IN THE FIELD THAT UNKNOWN OBSTRUCTIONS, GRADE DIFFERENCES, OR DIFFERENCES IN THE AREA DIMENSION EXIST THAT MIGHT NOT HAVE BEEN ADDRESSED IN THE DESIGN OF THE IRRIGATION SYSTEM. SUCH OBSTRUCTIONS OR DIFFERENCES SHALL BE BROUGHT TO THE ATTENTION OF THE CITY ENGINEER. IN THE EVENT THIS NOTIFICATION IS NOT PERFORMED, THE CONTRACTOR SHALL ASSUME FULL RESPONSIBILITY FOR ANY NECESSARY ALTERATIONS TO THE WORK.

3. THE CONTRACTOR SHALL OBTAIN, COORDINATE, AND PAY FOR ANY AND ALL INSPECTIONS AS REQUIRED.

4. THE CONTRACTOR SHALL BE RESPONSIBLE AND LIABLE FOR ANY ENCROACHMENT INTO ADJACENT PROPERTY, R.O.W.'S EASEMENTS SETBACKS OR ANY OTHER LEGAL PROPERTY RESTRICTIONS EITHER MARKED OR UNMARKED.

5. ALL SPRINKLER HEADS SHALL BE SET PERPENDICULAR TO FINISH GRADE UNLESS OTHERWISE SPECIFIED. INSTALL ALL HEADS WITH DOUBLE SWING JOINTS AS PER DETAIL. ALL HEADS ADJACENT TO PARKING LOTS, WALKS, ROADS, OR OTHER PAVED AREAS SHALL BE INSTALLED WITH POP-UP BODIES.

6. THE CONTRACTOR SHALL FLUSH AND ADJUST ALL SPRINKLER HEADS AND VALVES FOR OPTIMUM COVERAGE WITH MINIMAL MISTING AND/OR OVER SPRAY ONTO WALKS, STREETS, WALLS, ETC. SUBSTITUTION OF NOZZLE PATTERN OR RADIUS AS REQUIRED TO ACHIEVE OPTIMUM COVERAGE IS RESPONSIBILITY OF CONTRACTOR.

7. ALL IRRIGATION EQUIPMENT NOT OTHERWISE DETAILED OR SPECIFIED SHALL BE INSTALLED AS PER MANUFACTURER'S RECOMMENDATIONS AND SPECIFICATIONS.

8. TRENCHING WITHIN THE DRIPLINE OF LARGE EXISTING TREES SHALL BE PERFORMED BY HAND, AND WITH EXTREME CARE NOT TO SEVER ROOTS 1-1/2" IN DIAMETER AND LARGER. WHERE ROOTS 1-1/2" IN DIAMETER AND LARGER ARE ENCOUNTERED, THE CONTRACTOR SHALL TUNNEL UNDER SAID ROOTS. EXPOSED ROOTS THAT HAVE BEEN TUNNELED UNDER SHALL BE WRAPPED IN WET BURLAP AND KEPT MOIST WHILE THE TRENCH IS OPEN.

9. PIPE SIZES SHALL CONFORM TO THOSE SHOWN ON THE DRAWINGS. NO SUBSTITUTIONS OF SMALLER PIPE SIZES SHALL BE PERMITTED, BUT SUBSTITUTIONS OF LARGER SIZES MAY BE APPROVED. ALL DAMAGED AND REJECTED PIPE SHALL BE REMOVED FROM THE SITE AT THE TIME OF SAID REJECTION.

IRRIGATION SYSTEM LAYOUT

DUE TO THE SCALE OF THESE DRAWINGS THE CONTRACTOR SHOULD BE AWARE OF THE POSSIBILITY THAT THE NEED FOR MINOR ADJUSTMENTS TO THE IRRIGATION SYSTEM MAY BE NECESSARY TO PROVIDE PROPER COVERAGE. THESE ADJUSTMENTS COULD INCLUDE NOZZLE CHANGES AND/OR ADDITION OR DELETION OF INDIVIDUAL HEADS TO COMPENSATE FOR CHANGES MADE ON THE SITE. FURTHERMORE, THE IRRIGATION DESIGN IS DIAGRAMMATIC. ALL PIPING, VALVES, ETC., SHOWN WITHIN PAVED AREAS IS FOR DESIGN CLARIFICATIONS ONLY AND SHALL BE INSTALLED IN **SHRUB** AREAS WHEREVER POSSIBLE.

EXISTING CONDITIONS

THE CONTRACTOR IS RESPONSIBLE FOR REPLACING ANY EXISTING DAMAGED ITEMS DURING CONSTRUCTION INCLUDING HARDSCAPE, LIGHTING, DRAINAGE, IRRIGATION EQUIPMENT, TREES, SHRUBS, TURF AND GROUNDCOVER. THE CONTRACTOR SHALL REPLACE ANY AND ALL DAMAGED ITEMS TO THE SATISFACTION OF THE ENGINEER.

EQUIPMENT BOXES

ALL REMOTE CONTROL VALVES, BALL VALVES, QUICK COUPLERS, ETC. SHALL BE INSTALLED IN SPECIFIED **PURPLE** SUBGRADE VALVE BOXES AS SHOWN IN IRRIGATION LEGEND COMPLETE WITH LOCKING COVERS. VALVE BOXES SHALL BE NDS PRO OR APPROVED EQUAL AND SHALL BE MARKED 'G.V.' FOR GATE VALVES, 'R.C.V.' FOR REMOTE CONTROL VALVES, 'Q.C.' FOR QUICK COUPLERS, ETC. REMOTE CONTROL VALVE BOXES ARE ALSO TO BE HEAT BRANDED WITH THE CONTROLLER AND STATION NUMBER. ALL MARKINGS SHALL BE 2" LETTERS AND NUMBERS.

REMOTE CONTROL VALVE LABELS

ALL VALVES ARE TO BE FASTENED WITH CHRISTY'S VALVE IDENTIFICATION TAGS IDENTIFYING STATION # AND APPROPRIATE CONTROLLER IDENTIFICATION INFORMATION.

SLEEVING

SLEEVES SHALL BE PLACED UNDER ALL DRIVEWAYS AND WALKS WHERE IRRIGATION LATERAL, MAINLINE, AND WIRE WILL CROSS. SLEEVES SHALL BE PVC SCH. 40, MINIMUM BURY 36" DEEP. MINIMUM DISTANCE PAST EDGE OF DRIVEWAY OR CONCRETE WALK SHALL BE 24". WATER AND WIRE SHALL NOT BE PLACED IN THE SAME SLEEVE. SLEEVES TO BE TWICE THE DIAMETER OF THE PIPE BEING SLEEVED. CONTRACTOR SHALL ADD TWO (2) ADDITIONAL PIPES SEALED ON BOTH ENDS WITH DUCT TAPE TO EACH SLEEVE. WIRE SLEEVES TO BE 2" DIA.

POLYVINYL CHLORIDE PIPE CEMENT

IPS WELD-ON PVC 721 BLUE MEDIUM-BODIED (USE WITH 1/2" TO 1-1/2" PVC PIPE)
IPS WELD-ON PVC 711 GRAY HEAVY-BODIED (USE WITH 2" AND LARGER PVC PIPE AND ALL MAIN LINES)

POLYVINYL CHLORIDE PIPE PRIMER

IPS WELD-ON P-70 PRIMER PURPLE (USE WITH ALL PVC CONNECTIONS)

DETECTABLE MARKING TAPE

'CHRISTY'S' UNDERGROUND MARKING TAPE SHALL BE RUN WITH ALL MAINLINES AND MUST BE INSTALLED AT LEAST 6" ABOVE TOP OF PIPE.

DIRECT BURIAL CONTROL WIRES

(SOLID COPPER, 600 VOLT, TYPE UF)

COMMON WIRES:
WHITE (#12 AWG)

STATION WIRES:
(#14 AWG) COLOR-CODED REQUIREMENTS PER CITY STANDARD. INSTALL TWO (2) ADDITIONAL STATION WIRES AND TWO (2) ADDITIONAL COMMON WIRES TO ALL NEW VALVES FROM EXISTING CONTROLLER.

WIRE SPLICES/ CONNECTORS ARE TO BE 3M DBY DIRECT BURY SPLICE KIT. USE EXTRA SEALANT INSIDE CONNECTORS.

PVC PIPE FITTINGS

ALL FITTINGS CONNECTING PVC TO PVC SHALL BE SCH 40. ALL PVC FITTINGS TO BRASS VALVES SHALL BE REINFORCED WITH STAINLESS STEEL COLLAR.

IRRIGATION CONTROLLER

THE IRRIGATION CONTROLLER IS EXISTING. TO ENSURE PROPER FUNCTION OF THE NEW IRRIGATION SYSTEM, NEW CONTROL WIRES SHALL BE INSTALLED, LINKING NEW VALVES TO EXISTING CONTROLLER.

PIPING

SYMBOL	MANUFACTURER/ DESCRIPTION	MODEL	HOUSING	COMMENTS
	RECLAIMED IRRIGATION MAINLINE	CLASS 315 PVC (PURPLE)	INSTALL PER DETAILS	SIZE PER PLAN
	EXISTING RECLAIMED IRRIGATION MAINLINE	PROTECT IN PLACE AND MODIFY AS NEEDED. USE CLASS 315 PVC (MIN.) IN ANY MODIFICATIONS/REPAIRS DEEMED NECESSARY (PURPLE).		
	IRRIGATION LATERAL LINE	SCHEDULE 40 PVC (PURPLE)	INSTALL PER DETAILS	SIZE PER PLAN
	SLEEVE	SCHEDULE 40 PVC (PURPLE)	INSTALL PER DETAILS	SEE SLEEVING NOTE THIS SHEET
	EXISTING LATERAL LINE	PROTECT IN PLACE AND MODIFY AS NEEDED. USE SCHEDULE 40 PVC (MIN.) IN ANY MODIFICATIONS/REPAIRS DEEMED NECESSARY (PURPLE).		

REMOTE CONTROL DRIP ZONE KIT

REMOTE CONTROL VALVE

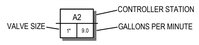

EXISTING ROTOR

IRRIGATION LEGEND

ROTARY NOZZLES

SYMBOL 360°	210°	180°	90°	45°	MANUFACTURER/ DESCRIPTION	NOZZLE	RAD.	HOUSING	GPM 360°	210°	180°	90°	45°	PSI	PRECIP. RATE
					RAINBIRD 6" POP-UP HUNTER NOZZLE	MP1000 W/ HY FILTER	12'	1806-SAM-PRS-NPCAP			0.34			30	0.90 IN/HR
					RAINBIRD 6" POP-UP HUNTER NOZZLE	MP3500 W/ HY FILTER	34'	1806-SAM-PRS-NPCAP			2.24	1.13		30	0.90 IN/HR

TREE BUBBLER

SYMBOL	MANUFACTURER/ DESCRIPTION	MODEL	RAD.	HOUSING	GPM	PSI	PRECIP. RATE
	RAINBIRD ROOT WATERING SYS.	BUBBLER 1402	N/A	RWS(GRATE P)-B-1402 INSTALL PURPLE GRATE	0.50	30	N/A

TREE SPRAY HEADS

SYMBOL	MANUFACTURER/ DESCRIPTION	NOZZLE	RAD.	HOUSING	FLOW	PSI	PRECIP. RATE
	RAINBIRD SPRAY BODY	SQ - HALF	4'	1806-SAM-PRS-NPCAP INSTALL (4) PER TREE	0.2 GPM	30	0.61 IN/HR

IN-LINE DRIP

SYMBOL	MANUFACTURER/ DESCRIPTION	MODEL	RAD.	HOUSING	GPH	PSI	PRECIP. RATE
	RAINBIRD DRIP LINE TUBING AREA	XFS-P-06-12 (PURPLE)	N/A	INSTALL 4" BELOW FINISH GRADE. REFER TO DETAILS	0.60	30	N/A

MISC. MATERIAL

SYMBOL	MANUFACTURER/ DESCRIPTION	MODEL	HOUSING	COMMENTS
	RAINBIRD REMOTE CONTROL VALVE	PESBR WITH PRS DIAL	NDS PRO 213PBCR W/ OVERLAPPING BOLT DOWN COVER (PURPLE)	SIZE PER PLAN
	RAINBIRD REMOTE CONTROL ZONE KIT	XCZ-100-PRBR 200 MESH	NDS PRO 217PBCR W/ OVERLAPPING BOLT DOWN COVER (PURPLE)	SIZE PER PLAN
	RAINBIRD QUICK COUPLER	44-NP	NDS PRO 211PBCR W/ OVERLAPPING BOLT DOWN COVER (PURPLE)	INSTALL PER MANUFACT. SPECIFICATIONS
	NIBCO GATE VALVE	T-113 (PURPLE HANDLE)	NDS PRO 213PBCR W/ OVERLAPPING BOLT DOWN COVER (PURPLE)	VALVE SIZE TO MATCH LINE SIZE
N/A	NIBCO BALL VALVE	T-FP-600A (PURPLE HANDLE)	NDS PRO 213PBCR W/ OVERLAPPING BOLT DOWN COVER (PURPLE)	VALVE SIZE TO MATCH LINE SIZE
N/A	NETAFIM DRIP FLUSH VALVE	TL050MFV-1	NDS PRO 211PBCR W/ OVERLAPPING BOLT DOWN COVER (PURPLE)	REFER TO DETAIL S, SHEET LI.3
N/A	RAINBIRD DRIP AIR RELIEF VALVE	ARV050	NDS 107PBCR W/ OVERLAPPING BOLT DOWN COVER (PURPLE)	REFER TO DETAIL R, SHEET LI.3
N/A	RAINBIRD DRIP SYSTEM OPERATION INDICATOR	OPERIND (INSTALL (1) PER DRIP ZONE)	REFER TO DRIP LINE LAYOUT DETAILS ON SHEET LI.3	INSTALL PER MANUFACT. SPECIFICATIONS
	BERMAD 4" MASTER VALVE/FLOW SENSOR	910-WMP	NDS PRO 217PBCR W/ OVERLAPPING BOLT DOWN COVER (PURPLE)	INSTALL PER MANUFACT. SPECIFICATIONS
	EXISTING IRRIGATION CONTROLLER		EXISTING	PROTECT IN PLACE

FIELD IRRIGATION ADJUSTMENTS

THE CONTRACTOR SHALL ENSURE THE FUNCTIONALITY OF THE EXISTING IRRIGATION SYSTEM PRIOR TO ANY CONSTRUCTION. WHERE THE NEW IMPROVEMENTS DO IMPACT THE PERFORMANCE OF THE EXISTING IRRIGATION SYSTEM THE CONTRACTOR SHALL BE RESPONSIBLE TO REPAIR AND/OR RE-ROUTE THE PRESSURE MAIN LINE, LATERALS, VALVES AND IRRIGATION EMITTERS WITHIN 5 DAYS. THE MODIFICATION OF THE EXISTING IRRIGATION SYSTEM SHALL BE INSTALLED TO PROVIDE HEAD TO HEAD COVERAGE WITH MINIMAL OVERSPRAY ONTO THE WALKS, SIGNS,FENCES, AND DRIVES. THE CONTRACTOR IS RESPONSIBLE FOR PROVIDING NEW IRRIGATION HEADS/ROTORS AND NOZZLES TO ENSURE FUNCTIONALITY OF THE SYSTEM. ALL NEW PRODUCTS INSTALLED TO BE OF LIKE KIND FOUND IN THE FIELD UNLESS SPECIFIED OTHERWISE IN THESE PLANS. THE CONTRACTOR WILL CAP AND MARK ALL NON-PRESSURE LATERAL LINES 5 FEET BEYOND THE NEW CONSTRUCTION. THE CONTRACTOR SHALL DISPOSE OF ANY UNUSED PRESSURE AND NON-PRESSURE PIPE WITHIN THE NEW CONSTRUCTION AREAS AND COMPACT WHERE PRESSURE/ NON-PRESSURE PIPES WERE REMOVED. THE CONTRACTOR WILL BE RESPONSIBLE FOR ANY COSTS ASSOCIATED WITH THE REPAIR AND/OR RE-ROUTING OF THE PRESSURE MAIN LINES. ALL EXISTING FIELD IRRIGATION SHOWN APPROXIMATED FROM RECORD DRAWINGS. IRRIGATION LINES ROTORS, AND MAINLINES MAY OR MAY NOT BE IN LOCATIONS SHOWN. CONTRACTOR IS RESPONSIBLE TO VERIFY EXACT LOCATION IN THE FIELD .

EXISTING MAINLINE NOTES:

EXISTING MAINLINE: THE EXISTING MAINLINE IS SHOWN TO BE DIAGRAMMATIC. THE CONTRACTOR SHALL BE RESPONSIBLE TO FIELD VERIFY THE MAINLINE'S ACTUAL LOCATION.

NEW VALVES: THE NEW REMOTE CONTROL VALVES SHALL BE INSTALLED IN NEW VALVE BOXES AND CONNECTED TO THE EXISTING MAINLINE AT THE APPROXIMATE LOCATION SHOWN ON PLANS. THE CONNECTIONS BETWEEN THE EXISTING MAINLINE AND NEW VALVES WILL REQUIRE ADDITIONAL PIPES AND FITTINGS. THE CONTRACTOR SHALL BE RESPONSIBLE TO PROVIDE ANY NECESSARY MATERIALS AND/OR EQUIPMENT TO SUCCESSFULLY CONNECT NEW VALVES TO EXISTING MAINLINE. LINK NEW REMOTE CONTROL VALVES TO THE EXISTING CONTROLLERS WITH NEW CONTROL WIRES.

EXISTING MAINLINE MODIFICATIONS: THE CONTRACTOR SHALL BE RESPONSIBLE TO PROVIDE ANY NECESSARY MATERIALS AND/OR EQUIPMENT TO SUCCESSFULLY CONNECT THE NEW IRRIGATION SYSTEM TO EXISTING MAINLINE. REPAIR/REPLACE EXISTING MAINLINE AND FITTINGS AS NECESSARY TO ENSURE PROPER FUNCTION OF THE SYSTEM. MODIFICATIONS TO THE EXISTING MAINLINE SHALL BE MADE TO THE SATISFACTION OF THE CITY ENGINEER AND LOCAL WATER PURVEYOR.

NOTE:

EXISTING REMOTE CONTROL VALVES: THE EXISTING REMOTE CONTROL VALVES THAT ARE TO REMAIN VIABLE, BUT ARE BEING DISPLACED BY HARDSCAPE SHALL BE RELOCATED TO THE NEAREST PLANTER AREA. THE CONNECTIONS BETWEEN THE NEW MAINLINE AND EXISTING VALVES WILL REQUIRE ADDITIONAL PIPES AND FITTINGS. THE CONTRACTOR SHALL BE RESPONSIBLE TO PROVIDE ANY NECESSARY MATERIALS AND/OR EQUIPMENT TO SUCCESSFULLY CONNECT EXISTING VALVES TO THE NEW MAINLINE.

EXISTING CONTROLLER

EXISTING CONTROLLER LOCATED WITHIN RESTROOM STORAGE CLOSET.

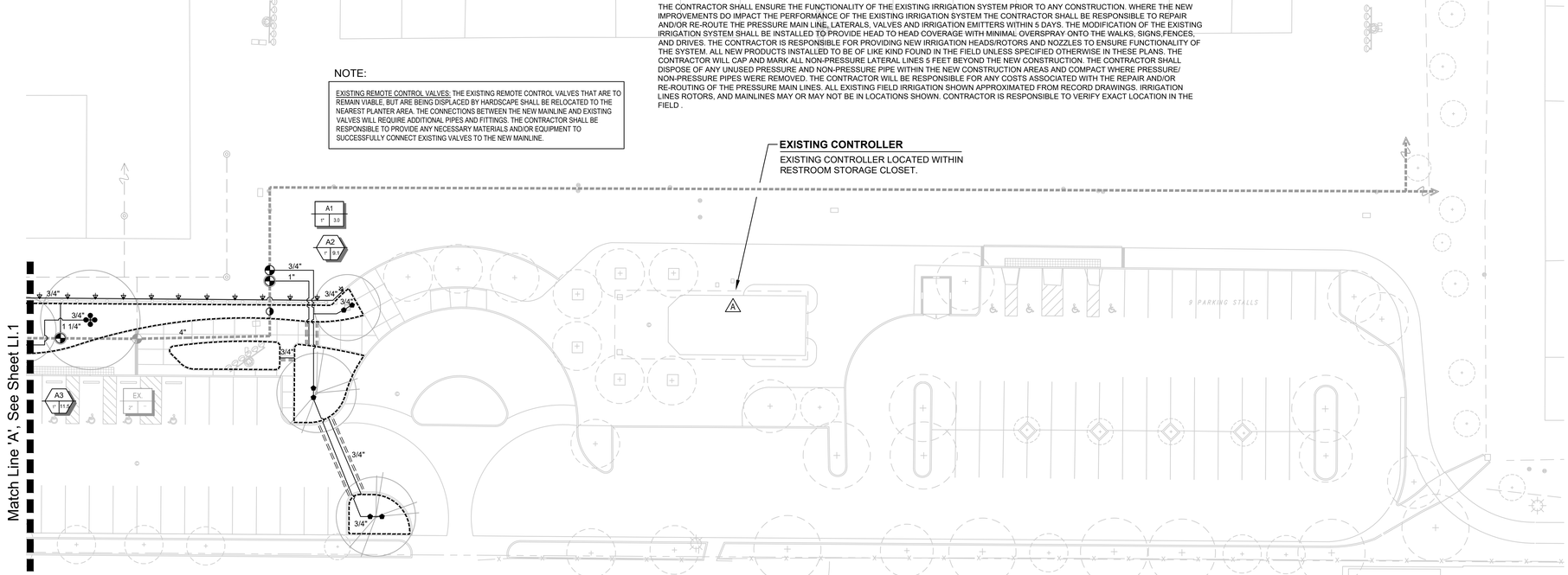

N

Scale: 1" = 20'-0"
0 5' 10' 20' 40'

REFER TO THE COVER SHEET FOR GENERAL NOTES

Landscape Architect:

David Volz Design
Landscape Architecture & Park Planning

Costa Mesa Office:
151 Kalmus Drive, Suite M8
Costa Mesa, CA 92626
Phone: (714) 641-1300
Fax: (714) 641-1323

e-mail: drawings@dvolzdesign.com
www.dvolzdesign.com

Subconsultant:

Seal:

REGISTERED LANDSCAPE ARCHITECT
GARY M. VOLZ
NO. 1883
SIGNATURE
EXP. FEB. 2021
8-5-21
DATE
STATE OF CALIFORNIA

CALL TOLL FREE
811
DIGALERT
UNDERGROUND SERVICE ALERT OF SOUTHERN CALIFORNIA

ATTENTION IS DIRECTED TO THE POSSIBLE EXISTENCE OF UNDERGROUND FACILITIES NOT KNOWN OR IN A LOCATION DIFFERENT FROM THAT WHICH IS SHOWN ON THE PLANS OR IN THE SPECIAL PROVISIONS. THE CONTRACTOR SHALL TAKE STEPS TO ASCERTAIN THE EXACT LOCATION OF ALL UNDERGROUND FACILITIES PRIOR TO DOING WORK THAT MAY DAMAGE SUCH FACILITIES OR INTERFERE WITH THEIR SERVICE.

BEFORE EXCAVATING, THE CONTRACTOR SHALL VERIFY THE LOCATION OF UNDERGROUND UTILITIES BY CONTRACTING UNDERGROUND SERVICE ALERT. CALL TOLL FREE 811.

Revisions:

No.	Date	Revisions	By

Project :
JACK HAMMETT SPORTS COMPLEX
LANDSCAPE, PARKING LOT EXPANSION & BUILDING IMPROVEMENTS
2750 FAIRVIEW ROAD

Owner:
City of Costa Mesa

Project No :	21-05
Drawn By :	PC / LP
Checked By :	GV
Date :	JULY, 2021
Scale :	AS SHOWN

Drawing Title :

IRRIGATION PLAN AND NOTES

Drawing No :

LI.2

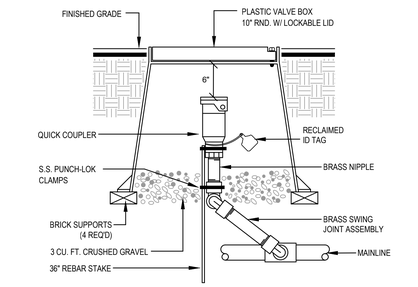

NOTE: HEAT BRAND 'QC' ONTO LID IN 2" LETTERS

E QUICK COUPLER

NOT TO SCALE

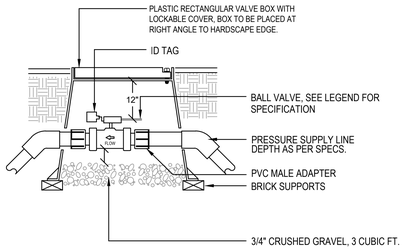

NOTE:
BOX TO BE INSTALLED AS TO ALLOW FOR PROPER OPERATION OF BALL VALVE INSTALL AT RIGHT ANGLE TO HARDSCAPE EDGE, INSTALL VALVE OFF-CENTER IN BOX.

NOTE: HEAT BRAND 'BV' ONTO LID IN 2" LETTERS

D BALL VALVE

NOT TO SCALE

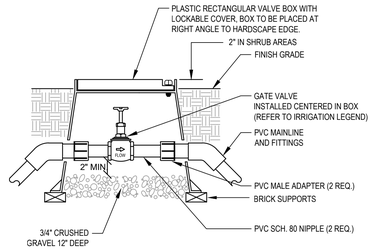

NOTE:
BOX TO BE INSTALLED AS TO ALLOW FOR PROPER OPERATION OF GATE VALVE INSTALL VALVE OFF-CENTER IN BOX.

NOTE: HEAT BRAND 'GV' ONTO LID IN 2" LETTERS

C GATE VALVE

NOT TO SCALE

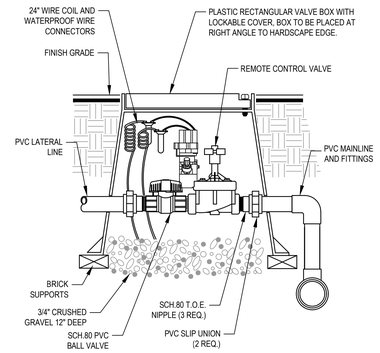

NOTES:
1. INSTALLATION TO BE COMPLETED IN ACCORDANCE WITH MANUFACTURERS SPECIFICATIONS.

NOTE: HEAT BRAND 'RCV' AND CONTROL STATION # ONTO LID IN 2" LETTERS

B REMOTE CONTROL VALVE

NOT TO SCALE

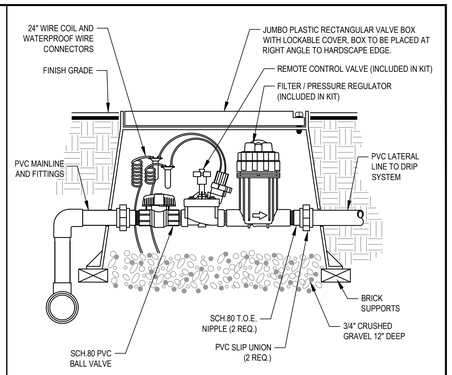

NOTES:
1. INSTALLATION TO BE COMPLETED IN ACCORDANCE WITH MANUFACTURERS SPECIFICATIONS.

NOTE: HEAT BRAND 'RCV' AND CONTROL STATION # ONTO LID IN 2" LETTERS

A REMOTE CONTROL DRIP ZONE KIT

NOT TO SCALE

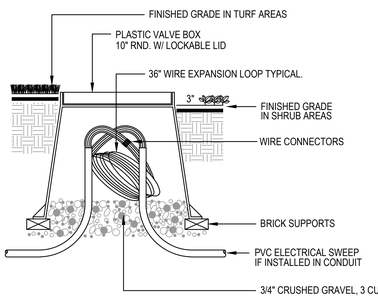

NOTE: HEAT BRAND 'PB' ONTO LID IN 2" LETTERS

J PULL BOX

NOT TO SCALE

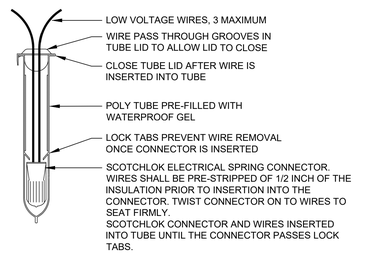

NOTE:
- WIRE CONNECTORS SHALL BE A 3M DBY DIRECT BURY SPLICE KIT. KIT SHALL INCLUDE A SCOTCHLOK Y SPRING CONNECTOR, A POLYPROPYLENE TUBE, AND A WATERPROOF - SEALING GEL. TUBE SHALL BE SUPPLIED PRE-FILLED WITH GEL. SPLICE KIT SHALL BE USED TO ELECTRICALLY CONNECT 2-3 #14 OR 2 #12 PRE-STRIPPED COPPER WIRES.
- LARGER WIRES OR GREATER QUANTITIES OF WIRES SHALL REQUIRE A LARGER APPROVED WIRE CONNECTION.

I WIRE CONNECTIONS

NOT TO SCALE

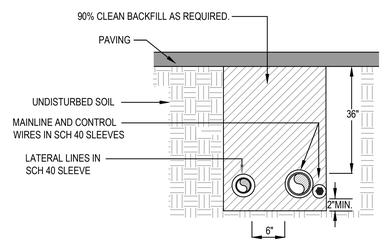

H SLEEVE INSTALLATION

NOT TO SCALE

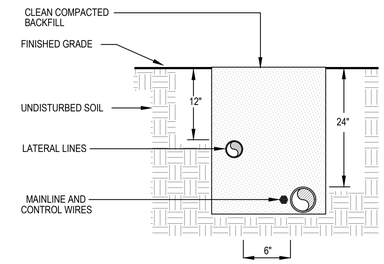

NOTES:
1. TAPE CONTROL WIRES EVERY 10'
2. IN ROCKY SOILS INSTALL PIPING IN SAND BED
3. 24" DEPTH REQUIRED FOR ALL DOMESTIC MAINLINES

G PIPE INSTALLATION

NOT TO SCALE

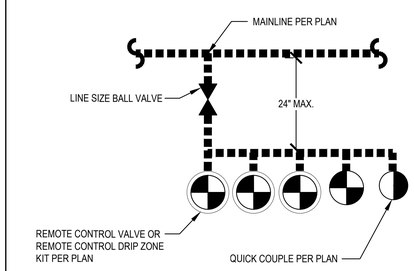

F VALVE MANIFOLD DIAGRAM

NOT TO SCALE

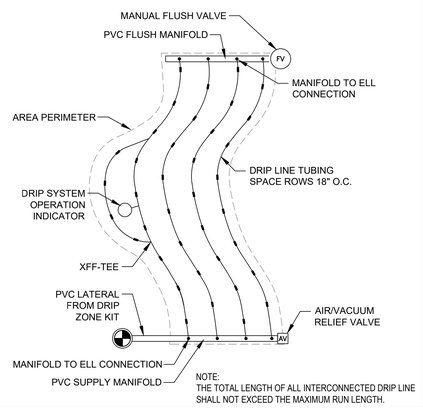

NOTE:
THE TOTAL LENGTH OF ALL INTERCONNECTED DRIP LINE SHALL NOT EXCEED THE MAXIMUM RUN LENGTH.

O DRIP LINE IRREGULAR LAYOUT

NOT TO SCALE

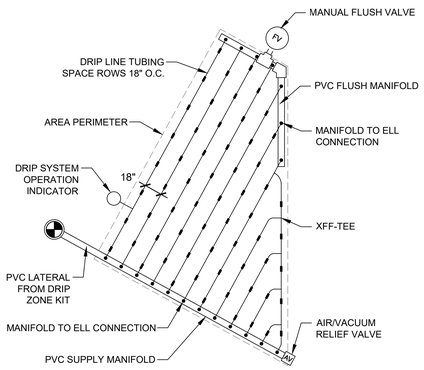

NOTE:
THE TOTAL LENGTH OF ALL INTERCONNECTED DRIP LINE SHALL NOT EXCEED THE MAXIMUM RUN LENGTH.

N DRIP LINE TRIANGULAR LAYOUT

NOT TO SCALE

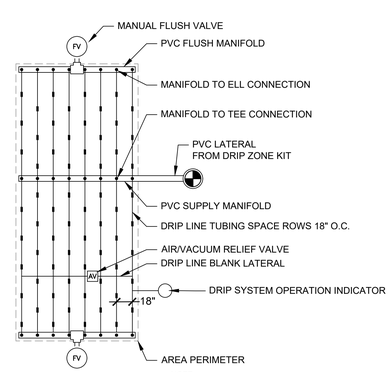

NOTE:
THE TOTAL LENGTH OF ALL INTERCONNECTED DRIP LINE SHALL NOT EXCEED THE MAXIMUM RUN LENGTH.

M DRIP LINE LAYOUT

NOT TO SCALE

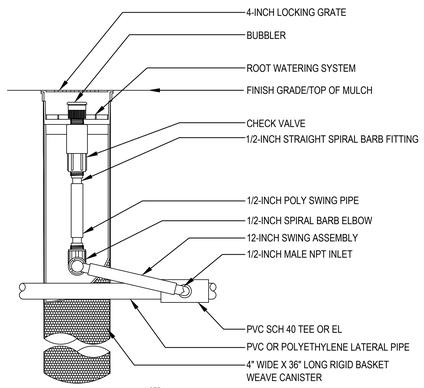

NOTE:
1. ONCE RWS HAS BEEN INSTALLED FILL THE BASKET WITH PEA GRAVEL BEFORE LOCKING LID.

L ROOT WATERING SYSTEM

NOT TO SCALE

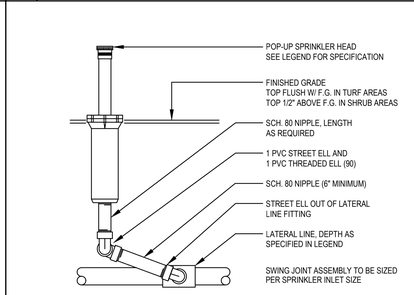

NOTE:
1. ALL SWING JOINTS SHALL BE SCH. 40 FITTINGS MADE IN THE FIELD, PREFABRICATED SWING JOINTS WILL NOT BE ACCEPTED. CITY TO CITY TO INSPECT ALL SWING JOINT ASSEMBLIES PRIOR TO INSTALLATION.

K POP-UP SPRAY HEAD

NOT TO SCALE

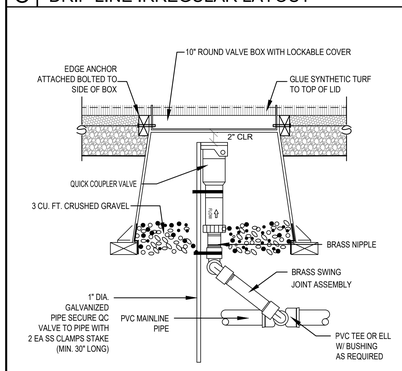

T QUICK COUPLER IN SYNTHETIC TURF

NOT TO SCALE

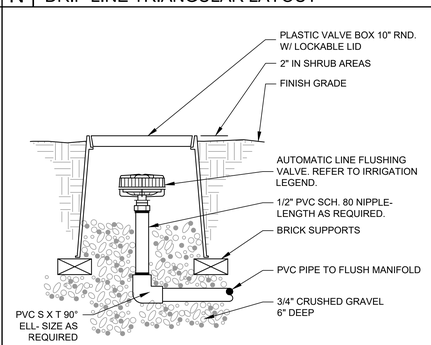

NOTE: HEAT BRAND 'FV' ONTO LID IN 2" LETTERS

S DRIP FLUSH VALVE

NOT TO SCALE

USE ONE AIR RELIEF VALVE FOR EVERY 7 GPM PER ZONE. LOCATE AT HIGH POINTS. RUN AIR RELIEF BLANK TUBING LATERAL ALONG HIGH POINT OF SECTION. ATTACH ALL DRIP TUBING TO BLANK LATERAL. MORE THAN TWO AIR RELIEF VALVES MAY NEED TO BE INSTALLED PER SECTION.

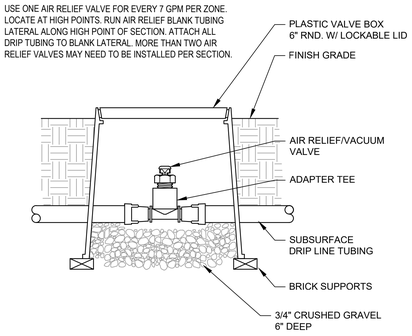

NOTE: HEAT BRAND 'AR' ONTO LID IN 2" LETTERS

R DRIP AIR RELIEF VALVE

NOT TO SCALE

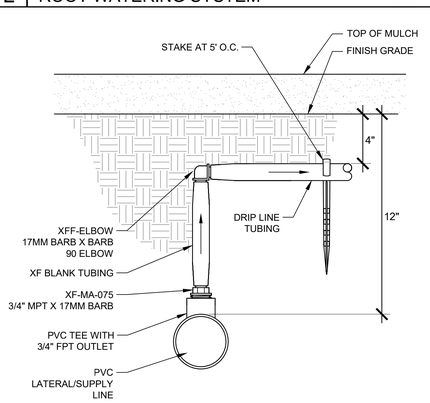

Q DRIP LINE MANIFOLD TO ELL CONNECT.

NOT TO SCALE

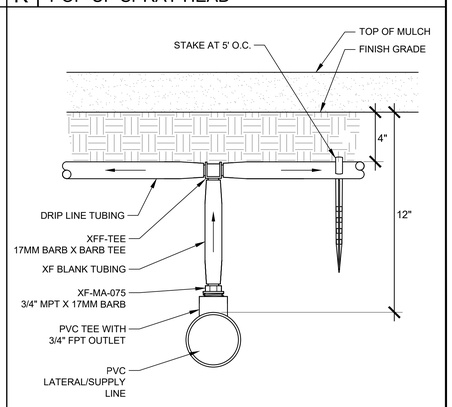

P DRIP LINE MANIFOLD TO TEE CONNECT.

NOT TO SCALE

Landscape Architect:

David Volz Design
Landscape Architecture & Park Planning

Costa Mesa Office:
151 Kalmus Drive, Suite M8
Costa Mesa, CA 92626
Phone: (714) 641-1300
Fax: (714) 641-1323

e-mail: drawings@dvolzdesign.com
www.dvolzdesign.com

Subconsultant:

Seal:

REGISTERED LANDSCAPE ARCHITECT
GARY M. VARGHESE
NO. 3883
SIGNATURE
EXP. FEB. 2021
8-5-21
DATE
STATE OF CALIFORNIA

CALL TOLL FREE
811
DIGALERT

UNDERGROUND SERVICE ALERT OF SOUTHERN CALIFORNIA

ATTENTION IS DIRECTED TO THE POSSIBLE EXISTENCE OF UNDERGROUND FACILITIES NOT KNOWN OR IN A LOCATION DIFFERENT FROM THAT WHICH IS SHOWN ON THE PLANS OR IN THE SPECIAL PROVISIONS. THE CONTRACTOR SHALL TAKE ALL PRECAUTIONARY MEASURES TO PROTECT ALL SUCH UNDERGROUND FACILITIES PRIOR TO DOING WORK THAT MAY DAMAGE SUCH FACILITIES OR INTERFERE WITH THEIR SERVICE.

BEFORE EXCAVATING, THE CONTRACTOR SHALL VERIFY THE LOCATION OF UNDERGROUND UTILITIES BY CONTRACTING UNDERGROUND SERVICE ALERT. CALL TOLL FREE 811.

Revisions:

No.	Date	Revisions	By

Project :
JACK HAMMETT SPORTS COMPLEX
LANDSCAPE, PARKING LOT EXPANSION & BUILDING IMPROVEMENTS
2750 FAIRVIEW ROAD

Owner:
City of Costa Mesa

Project No :	21-05
Drawn By :	PC / LP
Checked By :	GV
Date :	JULY, 2021
Scale :	AS SHOWN

Drawing Title :
IRRIGATION DETAILS

Drawing No :
LI.3

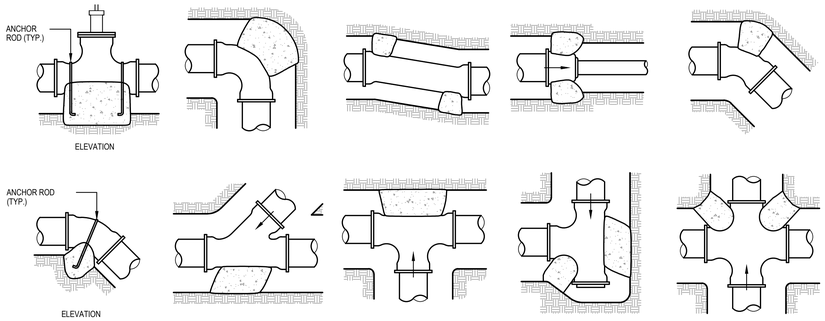

NOTE:

A. ALL PLASTIC PIPE TO BE INSTALLED ACCORDING TO THESE DETAILS UNLESS OTHERWISE NOTED OR DETAILED.

B. THE PORTLAND CEMENT CONCRETE USED FOR THRUST BLOCKS SHALL BE 420-C-2000 CONCRETE.

C. ALL ANCHOR RODS SHALL BE GALVANIZED STEEL. MINIMUM 1/2" DIAMETER. WRAPPED AROUND PIPE.

D. SIZE OF THRUST BLOCKS SHALL BE SPECIFIED ON PLANS.

E. THRUST BLOCKS SHALL BE USED FOR PLASTIC PIPES WITH 3" DIAMETER OR LARGER.

F. FLOW DIRECTION INDICATED BY ⟶

G. ALL VIEWS ARE PLAN VIEW UNLESS OTHERWISE SHOWN.

B THRUST BLOCK

NOT TO SCALE

- NOT USED	- NOT USED	- NOT USED
- NOT USED	- NOT USED	- NOT USED
- NOT USED	- NOT USED	- NOT USED
- NOT USED	- NOT USED	- NOT USED

Landscape Architect:

David Volz Design
Landscape Architecture & Park Planning

Costa Mesa Office:
151 Kalmus Drive, Suite M8
Costa Mesa, CA 92626
Phone: (714) 641-1300
Fax: (714) 641-1323

e-mail: drawings@dvolzdesign.com
www.dvolzdesign.com

Subconsultant:

Seal:

REGISTERED LANDSCAPE ARCHITECT
GARY M. VASQUEZ
NO. 1883
SIGNATURE
EXP. FEB. 2023
8-5-21
DATE
STATE OF CALIFORNIA

CALL TOLL FREE
811
DIGALERT

UNDERGROUND SERVICE ALERT OF SOUTHERN CALIFORNIA

ATTENTION IS DIRECTED TO THE POSSIBLE EXISTENCE OF UNDERGROUND FACILITIES NOT KNOWN OR IN A LOCATION DIFFERENT FROM THAT WHICH IS SHOWN ON THE PLANS OR IN THE SPECIAL PROVISIONS. THE CONTRACTOR SHALL TAKE STEPS TO ASCERTAIN THE EXACT LOCATION OF ALL UNDERGROUND FACILITIES PRIOR TO DOING WORK THAT MAY DAMAGE SUCH FACILITIES OR INTERFERE WITH THEIR SERVICE.

BEFORE EXCAVATING, THE CONTRACTOR SHALL VERIFY THE LOCATION OF UNDERGROUND UTILITIES BY CONTRACTING UNDERGROUND SERVICE ALERT. CALL TOLL FREE 811.

Revisions:

No.	Date	Revisions	By

Project :
JACK HAMMETT SPORTS COMPLEX
LANDSCAPE, PARKING LOT EXPANSION & BUILDING IMPROVEMENTS
2750 FAIRVIEW ROAD

Owner:
City of Costa Mesa

Project No :	21-05
Drawn By :	PC / LP
Checked By :	GV
Date :	JULY, 2021
Scale :	AS SHOWN

Drawing Title :

IRRIGATION DETAILS

Drawing No :

LI.4

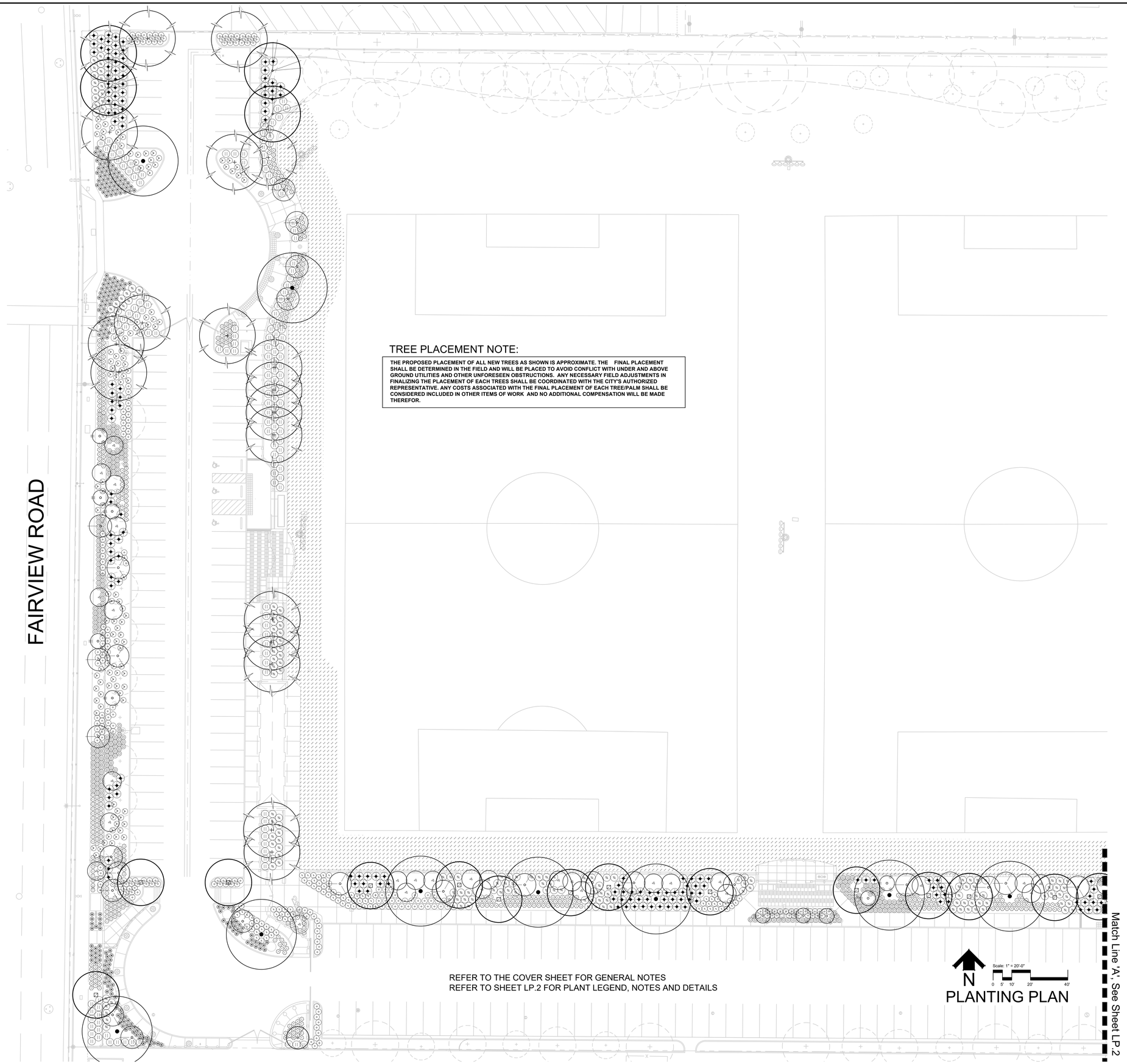

TREE PLACEMENT NOTE:

THE PROPOSED PLACEMENT OF ALL NEW TREES AS SHOWN IS APPROXIMATE. THE FINAL PLACEMENT SHALL BE DETERMINED IN THE FIELD AND WILL BE PLACED TO AVOID CONFLICT WITH UNDER AND ABOVE GROUND UTILITIES AND OTHER UNFORESEEN OBSTRUCTIONS. ANY NECESSARY FIELD ADJUSTMENTS IN FINALIZING THE PLACEMENT OF EACH TREES SHALL BE COORDINATED WITH THE CITY'S AUTHORIZED REPRESENTATIVE. ANY COSTS ASSOCIATED WITH THE FINAL PLACEMENT OF EACH TREE/PALM SHALL BE CONSIDERED INCLUDED IN OTHER ITEMS OF WORK AND NO ADDITIONAL COMPENSATION WILL BE MADE THEREFOR.

REFER TO THE COVER SHEET FOR GENERAL NOTES
REFER TO SHEET LP.2 FOR PLANT LEGEND, NOTES AND DETAILS

PLANTING PLAN

Landscape Architect:

David Volz Design
Landscape Architecture & Park Planning

Costa Mesa Office:
151 Kalmus Drive, Suite M8
Costa Mesa, CA 92626
Phone: (714) 641-1300
Fax: (714) 641-1323

e-mail: drawings@dvolzdesign.com
www.dvolzdesign.com

Subconsultant:

Seal:

REGISTERED LANDSCAPE ARCHITECT
GARY M. VASQUEZ
NO. 5883
SIGNATURE
EXP. FEB. 2023
8-5-21
DATE
STATE OF CALIFORNIA

CALL TOLL FREE
811
DIGALERT
UNDERGROUND SERVICE ALERT OF SOUTHERN CALIFORNIA

ATTENTION IS DIRECTED TO THE POSSIBLE EXISTENCE OF UNDERGROUND FACILITIES NOT KNOWN OR IN A LOCATION DIFFERENT FROM THAT WHICH IS SHOWN ON THE PLANS OR IN THE SPECIAL PROVISIONS. THE CONTRACTOR SHALL TAKE STEPS TO ASCERTAIN THE EXACT LOCATION OF ALL UNDERGROUND FACILITIES PRIOR TO DOING WORK THAT MAY DAMAGE SUCH FACILITIES OR INTERFERE WITH THEIR SERVICE.

BEFORE EXCAVATING, THE CONTRACTOR SHALL VERIFY THE LOCATION OF UNDERGROUND UTILITIES BY CONTRACTING UNDERGROUND SERVICE ALERT. CALL TOLL FREE 811.

Revisions:

No.	Date	Revisions	By

Project :
JACK HAMMETT SPORTS COMPLEX
LANDSCAPE, PARKING LOT EXPANSION & BUILDING IMPROVEMENTS
2750 FAIRVIEW ROAD

Owner:
City of Costa Mesa

Project No :	21-05
Drawn By :	PC / LP
Checked By :	GV
Date :	JULY, 2021
Scale :	AS SHOWN

Drawing Title :
PLANTING PLAN

Drawing No :
LP.1

LEGEND

1. V.I.T. - CINCH-TIES
2. LODGEPOLE PINE STAKE 3 INCH DIA. BY 10 FEET LONG
3. SET TOP OF ROOT BALL 1 INCH ABOVE FINISH GRADE
4. WOOD MULCH
5. FINISH GRADE
6. PLANTING TABLET - PLACE IN TOP 12" OF PLANTING HOLE. SEE SPECIFICATIONS FOR QUANTITY PER TREE
7. AMENDED SOIL FOR PLANTING- REFER TO SOILS REPORT
8. ROOTBALL
9. NATIVE SUBGRADE

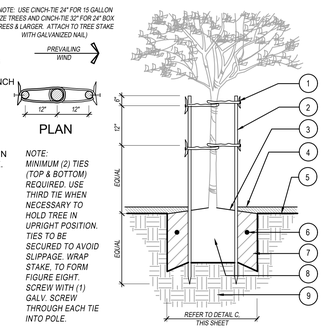

A TREE STAKING AND PLANTING DETAIL

NOT TO SCALE

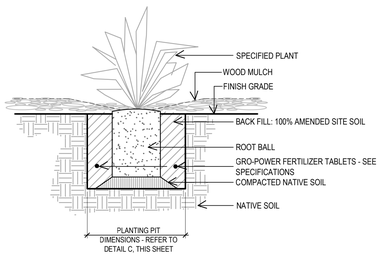

B SHRUB PLANTING DETAIL

NOT TO SCALE

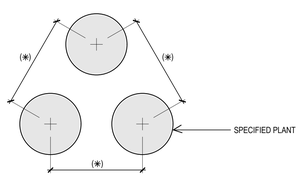

(✱) — REFER TO PLANT LEGEND FOR TRIANGLE SPACING DISTANCE

C TRIANGULAR SPACING

D NOT USED

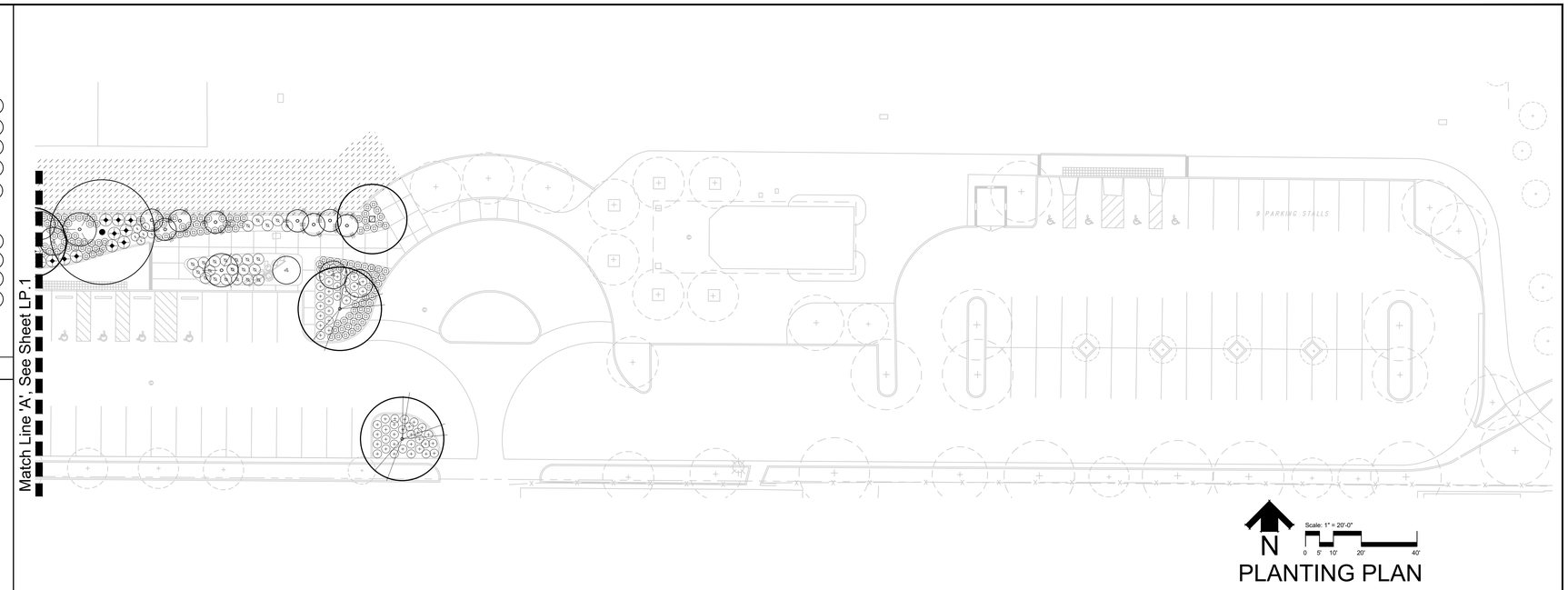

PLANTING PLAN

PLANTING NOTES

1. All local, municipal, county and state laws, rules, and regulations governing or relating to any portion of this work are hereby incorporated into and made part of the project plans and specifications; and their provisions shall be carried out by the Contractor. Additionally, all work shall be done in accordance with the applicable sections of the latest edition of the APWA, Standard Specifications for Public Works Construction, ("Green Book"), and the project specifications.

   Whenever special requirements conflict on any subject matter, the CITY APPROVED REPRESENTATIVE, or his/her designated representative, will determine which special requirements and/or codes shall govern.

2. The Contractor shall notify underground Service Alert of Southern California (Dig Alert) at least two (2) working days before digging, excavating, or construction. Phone 1-800-422-4333 or 811.

3. The Contractor shall not proceed with construction as shown on the plans when it is obvious in the field that unknown obstructions, grade differences, or discrepancies in area configuration or sizes, or in dimensions exist that might not have been considered in engineering. Such obstructions, or differences, should be brought to the attention of the Engineer, or his designated representative. In the event this notification is not performed, the Contractor shall assume full responsibility for any revisions necessary and shall perform such revisions at his own expense.

4. Finish grade all planting areas to achieve a minimum 2% drainage and smooth and even condition, making sure that no water pockets or irregularities remain. Remove and dispose of all surface stones, roots, weeds, debris, foreign materials, clods, and rocks over (1) inch in diameter so that after conditioning and planting the grade is two inches (2") below adjacent hardscape except along curb cut areas. Contractor is to ensure smooth transition from existing to new grade.

5. All inspections herein specified shall be made by the CITY APPROVED REPRESENTATIVE, or his/her designated representative. The Contractor shall request inspection at least 48 hours in advance of the time the inspection is required.

6. All existing landscaped areas damaged during construction must be restored to their original condition at the Contractor's expense. Restoration of existing landscape areas shall be done to the satisfaction of the Engineer.

7. All plant material shall be subject to the inspection and approval of the CITY APPROVED REPRESENTATIVE, or his/her designated representative, before planting. All plant material delivered on-site will be inspected for size and condition of root growth, insects, injuries, and defects. Plants not approved are to be removed from the site immediately and replaced with suitable plants. The CITY APPROVED REPRESENTATIVE reserves the right to reject entire lots of plants represented by defective samples. All plant material shall have nursery tags when delivered to the site.

8. Tree staking is as indicated per Planting Details.

9. Final location of all plant material is subject to the approval of the CITY APPROVED REPRESENTATIVE prior to planting.

10. The Contractor is responsible for count verification and is to supply the quantities delineated GRAPHICALLY on plans.

11. Plant establishment and Maintenance shall begin immediately after inspection and acceptance of the work by the CITY APPROVED REPRESENTATIVE, or his designated representative. Plant establishment period shall continue for sixty (60) days after the completion of the ninety (90) day maintenance period. Plant establishment and maintenance period shall be performed per the project's specifications.

12. Supplemental hand watering may be required during the 150-day maintenance period to establish plant material.

13. Place wood chip mulch in all planted areas at a minimum depth of 3" unless otherwise noted on plan. Do not install mulch within 3 inches of the tree/shrub trunk. Contractor to provide a sample of wood mulch for the City's review and approval prior to installation. Refer to specifications for acceptable wood mulch.

REFER TO THE COVER SHEET FOR GENERAL NOTES

PLANT LEGEND

TREES

SYMBOL	BOTANICAL NAME / COMMON NAME	QTY.	SIZE	COMMENTS	WATER USE
	CEDRUS ATLANTICA 'GLAUCA' BLUE ATLAS CEDAR	5	36" BOX		MEDIUM .5
	CERCIS CANADENSIS TEXENSIS 'OKLAHOMA' OKLAHOMA REDBUD	19	36" BOX		MEDIUM .5
	LOPHOSTEMON CONFERTUS BRISBANE BOX	15	36" BOX		MEDIUM .5
	QUERCUS SUBER CORK OAK	10	36" BOX		LOW .2

SHRUBS

SYMBOL	BOTANICAL NAME / COMMON NAME	QTY.	CONTAINER SIZE	COMMENTS	WATER USE
	ALOE STRIATA CORAL ALOE	215	#5	TO BE CONSIDERED AS ACCEPTABLE, THE ROOTING SYSTEM MUST BE A MINIMUM TWO-THIRDS CAN FULL	LOW 0.2
	CALLISTEMON VIMINALIS 'LITTLE JOHN' *DWARF BOTTLEBRUSH*	99	#5	TO BE CONSIDERED AS ACCEPTABLE, THE ROOTING SYSTEM MUST BE A MINIMUM TWO-THIRDS CAN FULL	LOW 0.5
	CHONDROPETALUM TECTORUM CAPE RUSH	112	#1	TO BE CONSIDERED AS ACCEPTABLE, THE ROOTING SYSTEM MUST BE A MINIMUM TWO-THIRDS CAN FULL	LOW 0.2
	COTONEASTER LACTEUS PARNEY COTONEASTER	33	#15	TO BE CONSIDERED AS ACCEPTABLE, THE ROOTING SYSTEM MUST BE A MINIMUM TWO-THIRDS CAN FULL	LOW 0.2
	DIANELLA TASMANICA 'VARIEGATA' *VARIEGATED FLAX LILY*	382	#1	TO BE CONSIDERED AS ACCEPTABLE, THE ROOTING SYSTEM MUST BE A MINIMUM TWO-THIRDS CAN FULL	LOW 0.2
	GREVILLEA LANIGERA 'COASTAL GEM' COASTAL GEM WOOLY GREVELLEA	179	#5	TO BE CONSIDERED AS ACCEPTABLE, THE ROOTING SYSTEM MUST BE A MINIMUM TWO-THIRDS CAN FULL	LOW 0.2
	LANTANA 'NEW GOLD' *NEW GOLD LANTANA*	430	#5	TO BE CONSIDERED AS ACCEPTABLE, THE ROOTING SYSTEM MUST BE A MINIMUM TWO-THIRDS CAN FULL	LOW 0.2
	LEPTOSPERMUM SCOPARIUM 'HELEN STRYBIND' PINK NEW ZEALAND TREE	18	#15	TO BE CONSIDERED AS ACCEPTABLE, THE ROOTING SYSTEM MUST BE A MINIMUM TWO-THIRDS CAN FULL	LOW 0.2
	MELALEUCA NESOPHILA *PINK MELALEUCA*	29	#15	TO BE CONSIDERED AS ACCEPTABLE, THE ROOTING SYSTEM MUST BE A MINIMUM TWO-THIRDS CAN FULL	LOW 0.2
	OLEA EUROPAEA 'MONTRA' LITTLE OLLIE DWARF OLIVE	161	#5	TO BE CONSIDERED AS ACCEPTABLE, THE ROOTING SYSTEM MUST BE A MINIMUM TWO-THIRDS CAN FULL	LOW 0.2
	RHAPHIOLEPIS INDICA 'JACK EVANS' PINK INDIA HAWTHORN	163	#5	TO BE CONSIDERED AS ACCEPTABLE, THE ROOTING SYSTEM MUST BE A MINIMUM TWO-THIRDS CAN FULL	LOW 0.2
	RHAPHIOLEPIS UMBELLATA *DWARF YEDDO HAWTHORN*	274	#1	TO BE CONSIDERED AS ACCEPTABLE, THE ROOTING SYSTEM MUST BE A MINIMUM TWO-THIRDS CAN FULL	LOW 0.2

TURFGRASS

SYMBOL	TURFGRASS		WUCOLS	REMARKS
	Repair and Replace damaged turfgrass with sod	Type of Sod: Celebration Sod Grower: A-G Sod Farms Inc. Phone: (800) 233-5254	High	Prepare area to receive sod soil as specified. The Contractor to install 'Big Rolls' (200-500 SF per roll) unless otherwise approved by the Landscape Architect.

EXISTING TREES

SYMBOL	DESCRIPTION
	EXISTING TREE TO PROTECT IN PLACE.

Landscape Architect:

David Volz Design
Landscape Architecture & Park Planning

Costa Mesa Office:
151 Kalmus Drive, Suite M8
Costa Mesa, CA 92626
Phone: (714) 641-1300
Fax: (714) 641-1323

e-mail: drawings@dvolzdesign.com
www.dvolzdesign.com

Subconsultant:

Seal:

REGISTERED LANDSCAPE ARCHITECT
GARY M. VOLZ
NO. 1883
SIGNATURE
EXP. FEB. 2020
8-5-21
DATE
STATE OF CALIFORNIA

CALL TOLL FREE
811
DIGALERT
UNDERGROUND SERVICE ALERT OF SOUTHERN CALIFORNIA

ATTENTION IS DIRECTED TO THE POSSIBLE EXISTENCE OF UNDERGROUND FACILITIES NOT KNOWN OR IN A LOCATION DIFFERENT FROM THAT WHICH IS SHOWN ON THE PLANS OR IN THE SPECIAL PROVISIONS. THE CONTRACTOR SHALL TAKE STEPS TO ASCERTAIN THE EXACT LOCATION OF ALL UNDERGROUND FACILITIES WHICH MAY INTERFERE OR DAMAGE SUCH FACILITIES OR INTERFERE WITH THEIR SERVICE.

BEFORE EXCAVATING, THE CONTRACTOR SHALL VERIFY THE LOCATION OF UNDERGROUND UTILITIES BY CONTRACTING UNDERGROUND SERVICE ALERT, CALL TOLL FREE 811.

Revisions:

No.	Date	Revisions	By

Project :
JACK HAMMETT SPORTS COMPLEX
LANDSCAPE, PARKING LOT EXPANSION & BUILDING IMPROVEMENTS
2750 FAIRVIEW ROAD

Owner:
City of Costa Mesa

Project No :	21-05
Drawn By :	PC / LP
Checked By :	GV
Date :	JULY, 2021
Scale :	AS SHOWN

Drawing Title :
PLANTING PLAN, NOTES & DETAILS

Drawing No :
LP.2

ABBREVIATIONS

&	AND
L	ANGLE
@	AT
℄	CENTERLINE
Φ	DIAMETER OF ROUND
⊥	PERPENDICULAR
#	POUND OR NUMBER
(E)	EXISTING
(N)	NEW
(R)	REMOVE
A.B.	ANCHOR BOLT
A.C.	ASPHALTIC CONCRETE
ACOUS.	ACOUSTICAL
A.D.	AREA DRAIN
ADJ.	ADJUSTABLE
A.F.F.	ABOVE FINISH FLOOR
AGGR.	AGGREGATE
ALT.	ALTERNATE
ALUM.	ALUMINUM
A.P.	ACCESS PANEL
APPROX.	APPROXIMATE
A.R.	ACID RESISTING
ARCH.	ARCHITECTURAL
ASB.	ASBESTOS
ASPH.	ASPHALT
A.T.	ACOUSTICAL TILE
BD.	BOARD
BITUM.	BITUMINOUS
BLDG.	BUILDING
BLK.	BLACK
BLKG.	BLOCKING
BM.	BEAM
BOT.	BOTTOM
B.S.	BOTH SIDES
CAB.	CABINET
C.B.	CATCH BASIN
C.C.T.	CUBICLE CURTAIN TRACK
C.C.TV.	CLOSED CIRCUIT TELEVISION
CEM.	CEMENT
CER.	CERAMIC
C.F.C.I.	CONTRACTOR FURNISHER, CONTRACTOR INSTALLED.
C.G.	CORNER GUARD
C.I.	CAST IRON
CIRC.	CIRCULATION
C.J.	CONTROL JOINT
CLG.	CEILING
CLKG.	CAULKING
CLO.	CLOSET
CLR.	CLEAR
C.M.U.	CONCRETE MASONRY UNIT
COL.	COLUMN
COMM.	COMMUNICATION
CONC.	CONCRETE
CONF.	CONFERENCE
CONN.	CONNECTION
CONST.	CONSTRUCTION
CONT.	CONTINUOUS
CORR.	CORRIDOR
CNTR.	COUNTER
C.S.	CLINICAL SINK
C.T.	CERAMIC TILE
CTR.	CENTER
CTSK.	COUNTERSUNK
DBL.	DOUBLE
DEPT.	DEPARTMENT
DET.	DETAIL
D.F.	DRINKING FOUNTAIN
DIA.	DIAMETER
DIM.	DIMENSION
DISP.	DISPENSER
DN.	DOWN
D.O.	DOOR OPENING
DR.	DOOR
DRS.	DRESS
DS.	DOWNSPOUT
D.S.P.	DRY STANDPIPE
DWG.	DRAWING
DWR.	DRAWER
E.	EAST
EA.	EACH
E.J.	EXPANSION JOINT
EL.	ELEVATION
ELEC.	ELECTRICAL
ELEV.	ELEVATOR
EMER.	EMERGENCY
ENCL.	ENCLOSURE
ENGR.	ENGINEER
ENT.	ENTRANCE
E.P.	ELECTRICAL PANELBOARD
EQ.	EQUAL
EQPT.	EQUIPMENT
E.W.C.	ELECTRIC WATER COOLER
EXC.	EXCAVATE
EXIST.	EXISTING
EXP.	EXPANSION
EXPO.	EXPOSED
EXT.	EXTERIOR

F.A.	FIRE ALARM
F.B.	FLAT BAR
F.D.	FLOOR DRAIN
FDN.	FOUNDATION
F.E.	FIRE EXTINGUISHER
F.E.C.	FIRE EXTINGUISHER CABINET
F.H.C.	FIRE HOSE CABINET
FIN.	FINISH
FLASH.	FLASHING
FLEX.	FLEXIBLE
FLR.	FLOOR
FLUOR.	FLUORESCENT
F.O.C.	FACE OF CONCRETE
F.O.F.	FACE OF FINISH
F.O.S.	FACE OF STUDS
FPRF.	FIREPROOF
F.S.	FULL SIZE
FT.	FOOT OR FEET
FTG.	FOOTING
FURR.	FURRING
FUT.	FUTURE
GA.	GAUGE
GALV.	GALVANIZED
G.B.	GRAB BAR
GL.	GLASS
GND.	GROUND
GR.	GRADE
G.W.B.	GYPSUM WALL BOARD
GYP.	GYPSUM
H.B.	HOSE BIBB
H.C.	HOLLOW CORE
HDWD.	HARDWOOD
HDWR.	HARDWARE
H.M.	HOLLOW METAL
HORIZ.	HORIZONTAL
HR.	HOUR
HT.	HEIGHT
I.D.	INSIDE DIAMETER
IN.	INCH
INSUL.	INSULATION
INT.	INTERIOR
INV.	INVERT
I.V.	INTRAVENEOUS
JAN.	JANITOR
J.C.	JANITOR CLOSET
JT.	JOINT
KIT.	KITCHEN
LAB.	LABORATORY
LAM.	LAMINATE
LAUN.	LAUNDRY
LAV.	LAVATORY
LIN.	LINEN
LKR.	LOCKER
L.L.	LEAD LINED
L.P.	LOW POINT
LT.	LIGHT
MAT.	MATERIAL
MAX.	MAXIMUM
M.C.	MEDICINE CABINET
MECH.	MECHANICAL
MED.	MEDICATION
MEMB.	MEMBRANE
MET.	METAL
MFR.	MANUFACTURER
MH.	MANHOLE
MIN.	MINIMUM
MIR.	MIRROR
MISC.	MISCELLANEOUS
M.L.	METAL LATH
M.O.	MASONRY OPENING
MTD.	MOUNTED
MUL.	MULLION
N.	NORTH
N.C.	NURSE CALL
N.I.C.	NOT IN CONTRACT
NO. OR #	NUMBER
NOM.	NOMINAL
N.T.S.	NOT TO SCALE
O2	OXYGEN
O.A.	OVERALL
OBS.	OBSCURE
O.C.	ON CENTER
O.D.	OUTSIDE DIAMETER
O.F.C.I.	OWNER FURNISHED CONTRACTOR INSTALLED
O.F.O.I.	OWNER FURNISHED OWNER INSTALLED
OFF.	OFFICE
O.H.	OPPOSITE HAND
OPG.	OPENING
OPP.	OPPOSITE
PAT.	PATIENT
PAV.	PAVING
P.C.D.	PAPER CUP DISPENSER
PL.	PLATE
P.LAM.	PLASTIC LAMINATE
PLAS.	PLASTER
PLUMB.	PLUMBING
PLYWD.	PLYWOOD
PR.	PAIR
PRCST.	PRE-CAST
PT.	POINT
P.T.D.	PAPER TOWEL DISPENSER
P.T.D./R	COMBINATION PAPER TOWEL DISPENSER AND RECEPTACLE
PTN.	PARTITION
P.T.R.	PAPER TOWEL RECEPTACLE

ABBREVIATIONS

Q.T.	QUARRY TILE
QTY.	QUANTITY
R.	RISER
RAD.	RADIUS
R.D.	ROOF DRAIN
RECEP.	RECEPTION
REF.	REFERENCE
REFRIG.	REFRIGERATOR
REINF.	REINFORCED
REQ.	REQUIRED
RESIL.	RESILIENT
RGSTR.	REGISTER
R.H.	ROBE HOOK
RM.	ROOM
R.O.	ROUGH OPENING
RUB.	RUBBER
RWD.	REDWOOD
R.W.L.	RAIN WATER LEADER
S.	SOUTH
S.C.	SOLID CORE
S.C.D.	SEAT COVER DISPENSER
SCHED.	SCHEDULE
S.D.	SOAP DISPENSER
SECT.	SECTION
SEC'Y	SECRETARY
SH.	SHELF
SHT.	SHEET
SHWR.	SHOWER
SIM.	SIMILAR
S.N.D.	SANITARY NAPKIN DISPENSER
S.N.R.	SANITARY NAPKIN RECEPTACLE
SPEC.	SPECIFICATION
SQ.	SQUARE
SST.	STAINLESS STEEL
S.SK.	SERVICE SINK
STA.	STATION
STAG.	STAGGERED
STD.	STANDARD
STL.	STEEL
STOR.	STORAGE
STR.	STRUCTURAL
SUSP.	SUSPENDED
S.V.	SHEET VINYL
SYM.	SYMMETRICAL

T.B.	TOWEL BAR
T.C.	TOP OF CURB
TEL.	TELEPHONE
TEMP.	TEMPERED
TER.	TERRAZZO
T. & G.	TONGUE AND GROOVE
THK.	THICK
THRES.	THRESHOLD
TKBD.	TACKBOARD
TLT.	TOILET
T.P.	TOP OF PAVEMENT
T.P.D.	TOILET PAPER DISPENSER
TRD.	TREAD
TV.	TELEVISION
T.W.	TOP OF WALL
TYP.	TYPICAL
U.L.	UNDERWRITER'S LABORATORY
UNF.	UNFINISHED
U.O.N.	UNLESS OTHERWISE NOTED
UR.	URINAL
V.	VACUUM
V.B.	VAPOR BARRIER
V.C.T.	VINYL COMPOSITION TILE
VENT.	VENTILATION
VERT.	VERTICAL
VEST.	VESTIBULE
V.I.F.	VERIFY IN THE FIELD
W.	WEST
W/	WITH
W.C.	WATER CLOSET
WD.	WOOD
W.G.	WIRED GLASS
W.I.	WROUGHT IRON
W/O	WITHOUT
WP.	WATERPROOFING
WSCT.	WAINSCOT
WT.	WEIGHT
X	TIME OR BY (4X4)

DRAWING SYMBOLS

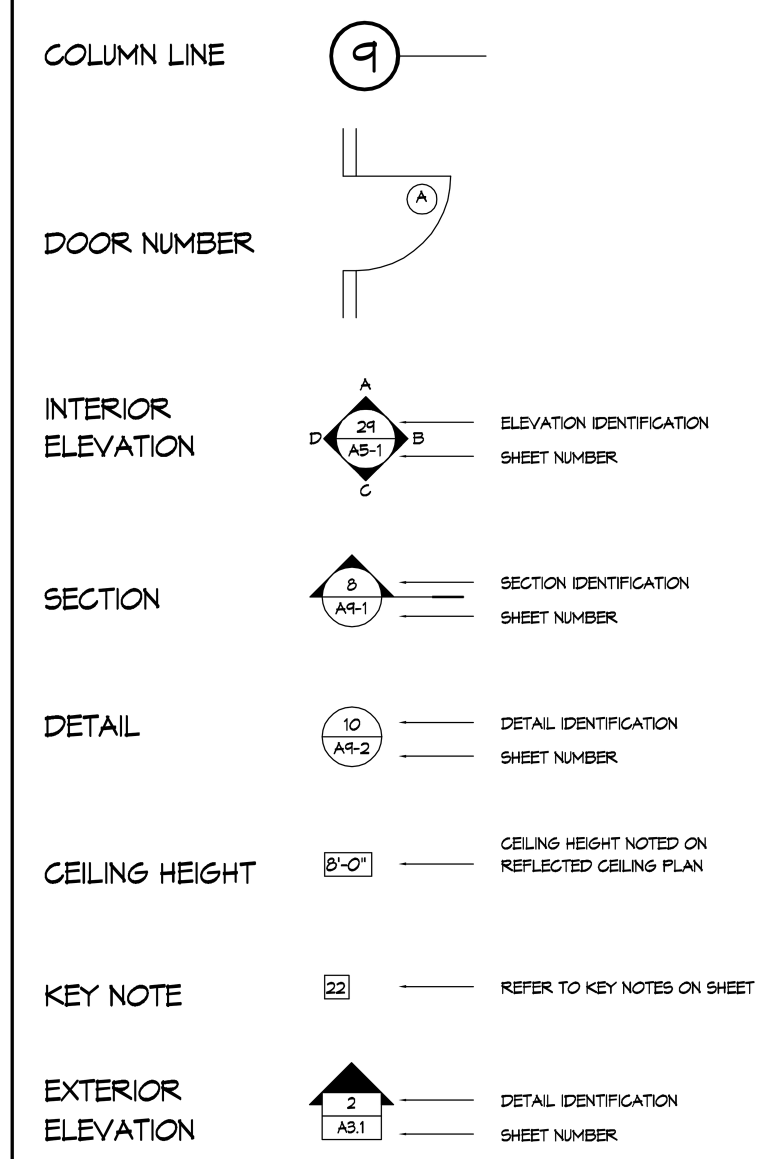

SPECIAL NOTES

1. ALL RE-SAWN EXPOSED LUMBER SHALL BE NO. 1 AND SHALL BE RE-SAWN TO NOMINAL SIZES.

2. PLACEMENT OF VERTICAL STRUCTURAL REINFORCING IN PLUMBING CHASE WALLS SHALL BE CO-ORDINATED WITH PLUMBING CONTRACTOR. ALL FIXTURE ACCESSORIES SHALL BE LAID OUT PRIOR TO POURING OF WALL FOOTINGS.

3. THERE SHALL BE NO HORIZONTAL ELECTRICAL IN MASONRY WALLS AND ALL VERTICAL CONDUIT SHALL BE PLACED AT THE HEADERS PROVIDING AMPLE CLEARANCE FOR GROUT ADJACENT TO VERTICAL REINFORCING.

4. VERTICAL ELECTRICAL CONDUIT SHALL NOT EXCEED ¾".

5. THERE SHALL BE NO EXPOSED ELECTRICAL CONDUIT IN PUBLIC ROOMS AND AREAS.

6. ALL AREAS WHERE FLOORS MUST DRAIN TO FLOOR DRAINS SHALL BE PER CURRENT ADA STANDARDS.

7. ALL EXPOSED FRAMING HARDWARE SHALL BE PLATED TO AVOID FUTURE RUSTING AND BE PAINTED PER THE PAINT SPECIFICATIONS CONTAINED HEREIN.

8. PLACEMENT AND LAYOUT OF ALL FRAMING EMBEDS BY THE MASONRY CONTRACTOR SHALL BE CO-ORDINATED WITH THE FRAMING CONTRACTOR PRIOR TO GROUTING.

9. CONTRACTOR SHOULD MAKE SURE ALL STEEL JAMBS ARE ON SITE PRIOR TO BEGINNING MASONRY CONSTRUCTION IN ENSURE PROPER PLACEMENT AND SOLID GROUTING OF SAME.

SHEET SCHEDULE

A1.0 ARCHITECTURAL NOTES
A1.1 ACCESSIBILITY NOTES
A2.0 FLOOR AND ROOF PLANS (STORAGE BUILDING NO.1)
A2.1 ARCHITECTURAL DETAILS
A2.2 ARCHITECTURAL SCHEDULES AND DETAILS
A3.0 EXTERIOR ELEVATIONS AND SECTIONS (STORAGE BUILDING NO.1)
-
SN-1 GENERAL NOTES
SN-2 STRUCTURAL OBSERVATION / SPECIAL INSPECTION
ST-1 TYPICAL CONCRETE DETAILS
ST-2 TYPICAL WOOD DETAILS
S.1 FOUNDATION PLANS
S.2 ROOF FRAMING PLANS
SD.1 DETAILS

BUILDING DATA

STORAGE BUILDING AREA NAME	AREA SQUARE FOOTAGE	1 PER ___ SQ. FT.	OCCUPANCY LOAD	SPRINKLERS	OCCUPANCY GRP.	TYPE OF CONSTRUCTION
STORAGE BUILDING NO.1	952 SQ. FT.	-	-	NO	B	V-B
-	- -	-	-	NO	B	V-B
-	-	-	-	NO	B	V-B
-	-	-	-	NO	B	V-B
-	-	-	-	NO	B	V-B
-	-	-	-	NO	B	V-B
-	-	-	-	NO	B	V-B
TOTAL BUILDINGS SQ. FT.: (FOOTPRINT)	952 SQ. FT.		-	NO	B	V-B

NOTE:
NO HAZARDOUS MATERIALS SHALL BE STORED AND/ OR USED IN THE BUILDING WHICH EXCEED THE QUANTITIES LISTED IN UBC TABLES 3-D AND 3-E.

FOUNDATION RECOMMENDATIONS

FOUNDATION RECOMMENDATION
CONVENTIONAL FOUNDATIONS, 24 INCHES WIDEAND 24 INCHES DEEPMAY BE DESIGNEDFOR AN ALLOWABLE BEARING CAPACITY OF 2,000 PSF. THE ABOVE BEARING CAPACITY MAY BE INCREASED BY 33% FOR SHORT TERM WIND OR SEISMIC LOADING. MAY BE USED FOR DESIGN OF FOOTING FOR PROPOSED STORAGE FACILITIES. SOIL RESISTANCE DEVELOPED AGAINST LATERAL MOVEMENT CAN BE OBTAINED FROM THE PASSIVE PRESSURE VALUE OF 250 PCF. FORSLIDING RESISTANCE, A FRICTION COEFFICIENT OF 0.30 MAY BE USED AT THE CONCRETE AND SOIL INTERFACE.THE PASSIVE RESISTANCE AND THE FRICTION OF RESISTANCE COULD BE COMBINEDWITHOUT REDUCTION.

GENERAL NOTES

1. ALL CONSTRUCTION AND MATERIAL SHALL BE AS SPECIFIED AND AS REQUIRED BY APPLICABLE LAWS AND REQUIREMENTS OF REGULATORY AGENCIES HAVING JURISDICTION.

2. THE CONTRACTOR IS RESPONSIBLE FOR ACCURATE PLACEMENT OF THE NEW CONSTRUCTION.

3. THE CONTRACTOR IS RESPONSIBLE TO VERIFY ALL EXISTING CONDITIONS AND DIMENSIONS AT THE JOB SITE PRIOR TO BIDDING AND START OF CONSTRUCTION. IN CASE OF DISCREPANCIES NOTIFY THE ARCHITECT AT ONCE FOR INSTRUCTIONS ON HOW TO PROCEED.

4. NO PORTION OF THE WORK REQUIRING SHOP DRAWING OR SAMPLE SUBMISSION SHALL COMMENCE UNTIL THE SUBMISSION HAS BEEN REVIEWED BY THE ARCHITECT.

5. CONFINE ALL OPERATIONS ON THE SITE TO THE AREAS DESIGNATED BY THE OWNER. ALL MATERIAL SHALL BE PROPERLY STACKED AND PROTECTED IN THE AREAS DESIGNATED BY THE OWNER.

6. THE CONTRACTOR IS RESPONSIBLE TO MAINTAIN A CLEAN AND ORDERLY JOB SITE FREE OF DEBRIES AND LITTER AND UNENCUMBERED WITH ANY UNREASONABLE EQUIPMENT OR MATERIAL.

7. ALL RECESSED MOUNT EQUIPMENT, ELECTRICAL PANELS, LIGHT FIXTURES, FIRE EXTINGUISHER CABINETS, TOILET ACCESSORIES, ETC. LOCATED IN RATED WALLS SHALL BE PROPERLY BACKED AS REQUIRED TO MAINTAIN RATING.

8. ALL DIMENSIONS HAVE PREFERENCE OVER SCALE UNLESS NOTED OTHERWISE, ALL DIMENSIONS ARE TO FACE OF STUD, CENTERLINE OF COLUMNS, AND FINISHED SURFACES IN THE CASE OF EXISTING FINISH SUFACES. ALL CEILING HEIGHT DIMENSIONS ARE FROM FINISH FLOOR SLAB TO THE FINISH FACE OF THE CEILING.

9. PROVIDE ALL ILLUMINATED AND NON ILLUMINATED EXIT SIGNS AS INDICATED ON THE DRAWINGS AND/OR AS REQUIRED BY THE CURRENT UNIFORM BUILDING CODE AND THE LOCAL GOVERNING AUTHORITIES.

10. PROVIDE ACCESS PANEL TO ALL THE CONCEALED AREAS AS REQUIRED BY THE CBC, CEC, CPC, CMC, NFPA AND ALL LOCAL GOVERNING AUTHORITIES.

11. THE PROJECT OWNER SHALL EMPLOY THE ENGINEER RESPONSIBLE FOR THE STRUCTURAL DESIGN OR PERSON DESIGNATED BY THEM TO PERFORM VISUAL STRUCTURAL OBSERVATION OF THE STRUCTURAL SYSTEM AT SIGNIFICANT CONSTRUCTION STAGES AND AT THE COMPLETION OF THE STRUCTURAL SYSTEM. OBSERVED DEFICIENCIES WILL BE REPORTED TO THE OWNER, CONTRACTOR, SPECIAL INSPECTOR AND BUILDING OFFICIAL IN WRITING.

12. THERE SHALL BE NO EXPOSED ELECTRICAL CONDUIT IN AREAS EXPOSED TO THE PUBLIC. ALL VERTICAL CONDUIT PLACED IN MASONRY WALLS SHALL BE NO LARGER THAN ½" AND SHALL BE PLACED ADJACENT TO BLOCK HEADERS. IN NO INSTANCE SHALL CONDUIT RUN ADJACENT TO WALL REINFORCING BARS. NO HORIZONTAL CONDUIT ALLOWED WITHIN MASONRY WALL.

13. ALL ROUGH PLUMBING LOCATIONS SHALL BE COORDINATED WITH MASONRY AND FOUNDATION CONTRACTORS PRIOR TO POURING OF FOUNDATION AND PLACEMENT OF CONCRETE MASONRY UNITS TO AVOID CONFLICTS DURING THE CONSTRUCTION PROCESS. SPECIAL ATTENTION SHOULD BE GIVEN TO MAJOR PLUMBING WALL ADJACENT TO THE PIPE CHASES.

APPLICABLE CODES

2020 CALIFORNIA BUILDING CODE
2020 CALIFORNIA ELECTRICAL CODE
2020 CALIFORNIA PLUMBING CODE
2020 CALIFORNIA MECHANICAL CODE
2020 CALIFORNIA ENERGY CODE
ALL APPLICABLE LOCAL CODES AND ORDINANCES

NOTE: DESIGN SHALL COMPLY WITH THE 2020 CALIFORNIA BUILDING CODE (CBC), CALIFORNIA MECHANICAL CODE (CMC), CALIFORNIA PLUMBING CODE (CPC), CALIFORNIA ELECTRICAL CODE (CEC), AND CALIFORNIA ENERGY CODE (CENC).

JOB ADDRESS

2750 FAIRVIEW ROAD
COSTA MESA, CA. 92626

CONSULTANTS

STRUCTURAL ENGINEER
SKA STRUCTURAL ENGINEERS
3456 GOLDEN POPPY WAY
YORBA LINDA, CA.
714-572-0172

GEOTECH. ENGINEER
WILLDAN GEOTECHNICAL
1515 S. SUNKIST STREET SUITE E
ANAHEIM, CALIFORNIA 92806
714-634-3318

MECHANICAL ENGINEER
LION FEC, LLC
16654 SOLEDAD CANYON ROAD #273
SANTA CLARITA, CA. 91387
760-977-1000

ELECTRICAL ENGINEER
DESIGN WEST ENGINEERING
275 W. HOSPITALITY LANE
SAN BERNARDINO, CA. 92408
909-890-3700

PLUMBING ENGINEER
LION FEC, LLC
16654 SOLEDAD CANYON ROAD #273
SANTA CLARITA, CA. 91387
760-977-1000

ARCHITECT CONSULTANT
JOHN WELLS AIA

Landscape Architect:

DVD
David Volz Design
Landscape Architecture & Park Planning

Costa Mesa Office:
151 Kalmus Drive, Suite M8
Costa Mesa, CA 92626
Phone: (714) 641-1300
Fax: (714) 641-1323

e-mail: drawings@dvolzdesign.com
www.dvolzdesign.com

Subconsultant:

Seal:

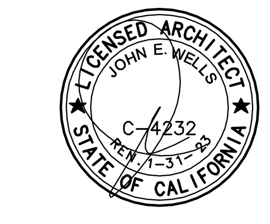

811
DIGALERT
UNDERGROUND SERVICE ALERT OF SOUTHERN CALIFORNIA

ATTENTION IS DIRECTED TO THE POSSIBLE EXISTENCE OF UNDERGROUND FACILITIES NOT KNOWN OR IN A LOCATION DIFFERENT FROM THAT WHICH IS SHOWN ON THE PLANS OR IN THE SPECIAL PROVISIONS. THE CONTRACTOR SHALL TAKE STEPS TO ASCERTAIN THE EXACT LOCATION OF ALL UNDERGROUND FACILITIES PRIOR TO DOING WORK THAT MAY DAMAGE SUCH FACILITIES OR INTERFERE WITH THEIR SERVICE.

BEFORE EXCAVATING, THE CONTRACTOR SHALL VERIFY THE LOCATION OF UNDERGROUND UTILITIES BY CONTRACTING UNDERGROUND SERVICE ALERT AT 1-(800)-422-4133.

Revisions:

No.	Date	Revisions	By

Project :
JACK HAMMETT SPORTS COMPLEX
LANDSCAPE, PARKING LOT EXPANSION & BUILDING IMPROVEMENTS
2750 FAIRVIEW ROAD
Owner:
City of Costa Mesa

Project No :
Drawn By : LP
Checked By : DV
Date : NOVEMBER 2019
Scale : AS SHOWN

Drawing Title :
ARCHITECTURAL NOTES

Drawing No :
A1.0

NEW BUILDINGS

SPACE ALLOWANCE AND REACH RANGES.

WHEELCHAIR PASSAGE WIDTH: THE MINIMUM CLEAR WIDTH FOR SINGLE WHEELCHAIR PASSAGE SHALL BE 32 INCHES AT A POINT AND 36 INCHES CONTINUOUSLY.

WIDTH FOR WHEELCHAIR PASSING: THE MINIMUM WIDTH FOR TWO WHEELCHAIRS TO PASS IS 60 INCHES.

WHEELCHAIR TURNING SPACE: THE SPACE REQUIRED FOR A WHEELCHAIR TO MAKE A 180 DEGREE TURN IS A CLEAR SPACE OF 60 INCHES DIAMETER OR A T-SHAPED.

CLEAR FLOOR OR GROUND SPACE FOR WHEELCHAIRS:

1. SIZE AND APPROACH: THE MINIMUM CLEAR FLOOR OR GROUND SPACE REQUIRED TO ACCOMMODATE A SINGLE, STATIONARY WHEELCHAIR AND OCCUPANT IS 30 INCHES BY 48 INCHES. THE MINIMUM CLEAR FLOOR OR GROUND SPACE FOR WHEELCHAIRS MAY BE POSITIONED FOR FORWARD OR PARALLEL APPROACH TO AN OBJECT. CLEAR FLOOR OR GROUND SPACE FOR WHEELCHAIRS MAY BE PART OF THE KNEE SPACE REQUIRED UNDER SOME OBJECTS.

2. RELATIONSHIP OF MANEUVERING CLEARANCES TO WHEELCHAIR SPACES: ONE FULL UNOBSTRUCTED SIDE OF THE CLEAR FLOOR OR GROUND SPACE FOR A WHEELCHAIR SHALL ADJOIN OR OVERLAP AN ACCESSIBLE ROUTE OR ADJOIN ANOTHER WHEELCHAIR CLEAR FLOOR SPACE. IF A CLEAR FLOOR SPACE IS LOCATED IN AN ALCOVE OR OTHERWISE CONFINED ON ALL OR A PART OF THREE SIDES, ADDITIONAL MANEUVERING CLEARANCES SHALL BE PROVIDED.

FORWARD REACH: IF THE CLEAR FLOOR SPACE ALLOWS ONLY FORWARD APPROACH TO AN OBJECT, THE MAXIMUM HIGH FORWARD REACH ALLOWED SHALL BE 48 INCHES. THE MINIMUM LOW FORWARD REACH IS 15 INCHES. IF HIGH FORWARD REACH IS OVER AN OBSTRUCTION.

SIDE REACH: IF THE CLEAR FLOOR SPACE ALLOWS PARALLEL APPROACH BY A PERSON IN A WHEELCHAIR, THE MAXIMUM HIGH SIDE REACH ALLOWED SHALL BE 54 INCHES AND THE LOW SIDE REACH SHALL BE NO LESS THAN 9 INCHES ABOVE THE FLOOR.

SIDE STRIPING FOR THE VISUALLY IMPAIRED: THE UPPER APPROACH AND THE LOWER TREAD OF EACH STAIR SHALL BE MARKED BY A STRIP OF CLEARLY CONTRASTING COLOR AT LEAST 2 INCHES WIDE PLACED PARALLEL TO, AND NOT MORE THAN 1 INCH FROM, THE NOSE OF THE STEP OR LANDING TO ALERT THE VISUALLY IMPAIRED. THE STRIP SHALL BE OF MATERIAL THAT IS AT LEAST AS SLIP RESISTANT AS THE OTHER TREADS OF THE STAIR.

WHERE STAIRWAYS OCCUR OUTSIDE A BUILDING, THE UPPER APPROACH AND ALL TREADS SHALL BE MARKED BY A STRIP OF CLEARLY CONTRASTING COLOR AT LEAST 2 INCHES WIDE AND PLACED PARALLEL TO AND NOT MORE THAN 1 INCH FROM THE NOSE OF THE STEP OR LANDING TO ALERT THE VISUALLY IMPAIRED. THE STRIP SHALL BE OF A MATERIAL THAT IS AT LEAST AS SLIP RESISTANT AS THE OTHER TREADS OF THE STAIR. A PAINTED STRIP SHALL BE ACCEPTABLE.

TREADS: ALL TREAD SURFACES SHALL BE SLIP-RESISTANT. TREADS SHALL HAVE SMOOTH, ROUNDED OR CHAMFERED EXPOSED EDGES, AND NO ABRUPT EDGES AT THE NOSING (LOWER FRONT EDGE)

NOSING: NOSING SHALL NOT PROJECT MORE THAN 1 1/2 INCHES PAST THE FACE OF THE RISER BELOW.

FLOORS AND LEVELS.

FLOORS WITHIN EACH STORY: IN BUILDINGS AND FACILITIES, FLOORS OF A GIVEN STORY SHALL BE A COMMON LEVEL THROUGHOUT, OR SHALL BE CONNECTED BY PEDESTRIAN RAMPS, PASSENGER ELEVATORS OR SPECIAL ACCESS LIFTS.

FLOOR SURFACE: THE SURFACE OF FLOORS SHALL BE SLIP-RESISTANT.

PROTRUDING OBJECTS.

GENERAL: OBJECTS PROJECTING FROM WALLS (FOR EXAMPLE TELEPHONES) WITH THEIR LEADING EDGES BETWEEN 27 INCHES AND 80 INCHES ABOVE THE FINISHED FLOOR SHALL PROTRUDE NO MORE THAN 4 INCHES INTO WALKS, HALLS, CORRIDORS, PASSAGEWAYS OR AISLES. OBJECTS MOUNTED WITH THEIR LEADING EDGES AT OR BELOW 27 INCHES ABOVE THE FINISHED FLOOR MAY PROTRUDE ANY AMOUNT. FREE-STANDING OBJECTS MOUNTED ON POSTS OR PYLONS MAY OVERHANG 12 INCHES MAXIMUM FROM 27 INCHES TO 80 INCHES ABOVE THE GROUND OR FINISHED FLOOR. PROTRUDING OBJECTS SHALL NOT REDUCE THE CLEAR WIDTH OF AN ACCESSIBLE ROUTE OR MANEUVERING SPACE.

GROUND AND FLOOR SURFACES.

GENERAL: GROUND AND FLOOR SURFACES ALONG ACCESSIBLE ROUTES AND IN ACCESSIBLE ROOMS AND SPACES, INCLUDING FLOORS, WALKS, RAMPS, STAIRS AND CURB RAMPS, SHALL BE STABLE, FIRM, SLIP-RESISTANT, AND SHALL COMPLY WITH THIS SECTION.

CHANGES IN LEVEL: CHANGES IN LEVEL UP TO $\frac{1}{4}$ INCH VERTICAL AND WITHOUT EDGE TREATMENT. CHANGES IN LEVEL BETWEEN $\frac{1}{4}$ INCH AND $\frac{1}{2}$ INCH SHALL BE ACCOMPLISHED BY MEANS OF A RAMP THAT COMPLIES WITH FIGURE 11B-5E (d).

CARPET: IF CARPET OR CARPET TILE IS USED ON A GROUND OR FLOOR SURFACE, THEN IT SHALL BE SECURELY ATTACHED; HAVE A FIRM CUSHION, PAD OR BACKING OR NO CUSHION OR PAD; AND HAVE A LEVEL LOOP TEXTURED LOOP; LEVEL-CUT PILE, OR LEVEL-CUT/UNCUT PILE TEXTURE. THE MAXIMUM PILE HEIGHT SHALL BE $\frac{1}{2}$ INCH. EXPOSED EDGES OF CARPET SHALL BE FASTENED TO FLOOR SURFACES AND HAVE TRIM ALONG THE ENTIRE LENGTH OF THE EXPOSED EDGE.

GRATINGS: IF GRATINGS ARE LOCATED IN WALKING SURFACES, THEN THEY SHALL HAVE SPACES NO GREATER THAN $\frac{1}{2}$ INCH WIDE IN ONE DIRECTION. IF GRATINGS HAVE ELONGATED OPENINGS, THEN THEY SHALL BE PLACED SO THAT THE LONG DIMENSION IS PERPENDICULAR TO THE DOMINANT DIRECTION OF TRAVEL.

SITE ACCESSIBILITY

EXTERIOR ROUTES OF TRAVEL

GENERAL: SITE DEVELOPMENT AND GRADING SHALL BE DESIGNED TO PROVIDE ACCESS TO ALL ENTRANCES AND EXTERIOR GROUND FLOOR EXITS, AND ACCESS TO NORMAL PATHS OF TRAVEL, AND WHERE NECESSARY TO PROVIDE ACCESS, SHALL INCORPORATE PEDESTRIAN RAMPS, CURB RAMPS, ETC. WHEN MORE THAN ONE BUILDING OR FACILITY IS LOCATED ON A SITE, ACCESSIBLE ROUTES OF TRAVEL SHALL BE PROVIDED BETWEEN BUILDINGS AND ACCESSIBLE SITE FACILITIES. THE ACCESSIBLE ROUTE OF TRAVEL SHALL BE THE MOST PRACTICAL DIRECT ROUTE BETWEEN ACCESSIBLE BUILDING ENTRANCES, ACCESSIBLE SITE FACILITIES AND THE ACCESSIBLE ENTRANCE TO THE SITE.

EXCEPTIONS: 1. WHERE THE ENFORCING AGENCY DETERMINES THAT COMPLIEANCE WITH THESE REGULATIONS WOULD CREATE AN UNREASONABLE HARDSHIP BECAUSE OF TOPOGRAPHY, NATURAL BARRIERS, ETC., AN EXCEPTION MAY BE GRANTED WHEN EQUIVALENT FACILITATION IS PROVIDED THROUGH THE USE OF OTHER METHODS AND MATERIALS.

2. IN EXISTING BUILDINGS, THIS SECTION SHALL NOT APPLY IN THOSE CONDITIONS WHERE, DUE TO LEGAL OR PHYSICAL CONSTRAINTS, THE SITE OF THE PROJECT WOULD NOT ALLOW COMPLIANCE WITH THESE REGULATIONS OR EQUIVALENT FACILITATION WITHOUT CREATING AN UNREASONABLE HARDSHIP.

DESIGN AND CONSTRUCTION: WHEN ACCESSIBILITY IS REQUIRED BY THIS SECTION, IT SHALL BE DESIGNED AND CONSTRUCTED IN ACCORDANCE WITH THE BUILDING CODE.

SIGNS: AT EVERY PRIMARY PUBLIC ENTRANCE AND AT EVERY MAJOR JUNCTION ALONG OR LEADING TO AN ACCESSIBLE ROUTE OF TRAVEL, THERE SHALL BE A SIGN DISPLAYING THE INTERNATIONAL SYMBOL OF ACCESSIBILITY. SIGNS SHALL INDICATE THE DIRECTION ACCESSIBLE BUILDING ENTRANCES AND FACILITIES.

CURB RAMPS

1. GENERAL: CURB RAMPS SHALL BE CONSTRUCTED AT EACH CORNER OF STREET INTERSECTIONS AND WHERE A PEDESTRIAN WAY CROSSES A CURB. THE PREFERRED AND RECOMMENDED LOCATION OF THE CURB RAMPS IS IN THE CENTER OF THE CROSSWALK OF EACH STREET CORNER. WHERE IT IS NECESSARY TO LOCATE A CURB RAMP IN THE CENTER OF THE CURB RETURN AND THE STREET SURFACES ARE MARKED TO IDENTIFY PEDESTRIAN CROSSWALKS, THE LOWER END OF THE CURB RAMP SHALL TERMINATE WITHIN SUCH CROSSWALK AREAS.

2. WIDTH OF CURB RAMPS: CURB RAMPS SHALL BE A MINIMUM OF 4 FEET IN WIDTH AND SHALL LIE, GENERALLY, IN A SINGLE SLOPE PLANE, WITH A MINIMUM OF SURFACE WARPING AND CROSS SLOPE.

3. SLOPE OF CURB RAMPS: THE SLOPE OF CURB RAMPS SHALL NOT EXCEED 1 UNIT VERTICAL TO 12 UNITS HORIZONTAL (8.33% SLOPE). TRANSITIONS FROM RAMPS TO WALKS, GUTTERS, OR STREETS SHALL BE FLUSH AND FREE OF ABRUPT CHANGES, EXCEPT THAT CURB RAMPS SHALL COMPLY WITH ITEM 5 BELOW. MAXIMUM SLOPES OF ADJOINING GUTTERS, ROAD SURFACES IMMEDIATELY ADJACENT TO THE CURB RAMP, OR ACCESSIBLE ROUTE SHALL NOT EXCEED 1 UNIT VERTICAL TO 20 UNITS HORIZONTAL (5% SLOPE) WITHIN 4 FEET OF THE TOP AND BOTTOM OF THE CURB RAMP. THE SLOPE OF THE FANNED OR FLARED SIDES OF CURB RAMPS SHALL NOT EXCEED 1 UNIT VERTICAL TO 10 UNITS HORIZONTAL (10% SLOPE).

4. LEVEL LANDING: A LEVEL LANDING 4 FEET DEEP SHALL BE PROVIDED AT THE UPPER END OF EACH CURB RAMP OVER ITS FULL WIDTH TO PERMIT SAFE EGRESS FROM THE RAMP SURFACE, OR THE SLOPE OF THE FANNED OR FLARED SIDES OF THE CURB RAMP SHALL NOT EXCEED 1 UNIT VERTICAL TO 12 UNITS HORIZONTAL (8.33% SLOPE).

5. BEVELED LIP: THE LOWER END OF EACH CURB RAMP SHALL HAVE A $\frac{1}{2}$ INCH LIP BEVELED AT 45 DEGREES AS A DETECTABLE WAYFINDING EDGE FOR PERSONS WITH VISUAL IMPAIRMENT.

6. FINISH: THE SURFACE OF EACH CURB RAMP AND ITS FLARED SIDES SHALL BE STABLE, FIRM AND SLIP RESISTANT AND SHALL BE OF CONTRASTING FINISH FROM THAT OF THE ADJACENT SIDEWALK.

7. BORDER: ALL CURB RAMPS SHALL HAVE A GROOVED BORDER 12 INCHES WIDE AT THE LEVEL SURFACE OF THE SIDEWALK ALONG THE TOP AND EACH SIDE APPROXIMATELY $\frac{3}{4}$ INCH ON CENTER. ALL CURB RAMPS CONSTRUCTED BETWEEN THE FACE OF THE CURB AND THE STREET SHALL HAVE A GROOVED BORDER AT THE LEVEL SURFACE OF THE SIDEWALK.

8. DETECTABLE WARNINGS: A CURB RAMP SHALL HAVE A DETECTABLE WARNING THAT EXTENDS THE FULL WIDTH AND 36" INSIDE THE GROOVED BORDER WHEN THE RAMP SLOPE IS LESS THAN 1 UNIT VERTICAL TO 15 UNITS HORIZONTAL (6.7% SLOPE). DETECTABLE WARNINGS SHALL CONSIST OF RAISED TRUNCATED DOMES WITH A DIAMETER OF NOMINAL 0.9 INCH AT THE BASE TAPERING TO 0.45 INCH AT THE TOP, A HEIGHT OF NOMINAL 0.2 INCH AND A CENTER-TO-CENTER SPACING OF NOMINAL 2.35 INCHES "NOMINAL" AND SHALL BE IN ACCORDANCE WITH SECTION 12-31-102, STATE REFERENCED STANDARDS CODE. THE DETECTABLE WARNING SHALL CONTRAST VISUALLY WITH ADJOINING SURFACES, EITHER LIGHT-ON-DARK OR DARK-ON-LIGHT. THE MATERIAL USED TO PROVIDE CONTRAST SHALL BE AN INTREGAL PART OF THE WALKING SURFACE. THE DOMES MAY BE CONSTRUCTED IN A VARIETY OF METHODS, INCLUDING CAST IN PLACE OR STAMPED, OR MAY BE PART OF A PREFABRICATED SURFACE TREATMENT.

9. OBSTRUCTIONS: CURB RAMPS SHALL BE LOCATED OR PROTECTED TO PREVENT THEIR OBSTRUCTION BY PARKED CARS.

10. DIAGONAL CURB RAMPS: IF DIAGONAL (OR CORNER-TYPE) CURB RAMPS HAVE RETURNED CURBS OR OTHER WELL-DEFINED EDGES, SUCH EDGES SHALL BE PARALLEL TO THE DIRECTION PEDESTRIAN FLOW. THE BOTTOM OF DIAGONAL CURB RAMPS SHALL HAVE 48 INCHES MINIMUM CLEAR SPACE. IF DIAGONAL CURB RAMPS ARE PROVIDED AT MARKED CROSSINGS, THE 48-INCH CLEAR SPACE SHALL BE WITHIN THE MARKINGS. IF DIAGONAL CURB RAMPS HAVE FLARED SIDES, THEY SHALL ALSO HAVE AT LEAST A 24-INCH-LONG SEGMENT OF STRAIGHT CURB LOCATED ON EACH SIDE OF THE CURB RAMP AND WITHIN THE MARKED CROSSING.

CROSS SLOPES OF WALKING SURFACES SHALL BE THE MINIMUM POSSIBLE AND SHALL NOT EXCEED 1:48. THE SLOPE OF ANY APPRECIABLY WARPED WALKING SURFACE SHALL NOT PER FOOT (2.083 % SLOPE) IN AN DIRECTION. WHERE PEDESTRIAN EXCEED 1 UNIT VERTICAL IN 12 UNITS HORIZONTAL (8.33 GRADE SEPARATIONS CROSS STREETS OR OTHER VEHICULAR TRAFFIC WAYS, AND WHERE A STREET LEVEL CROSSING CAN REASONABLY AND SAFELY BE USED BY PERSONS WITH PHYSICAL DISABILITIES, THERE SHALL BE PROVIDED CONFORMING CURB RAMPS AND USABLE PATHWAYS.

EXCEPTIONS: 1. WHEN THE GRADE DIFFERENTIAL OF THE WALKING SURFACE OF A PEDESTRIAN GRADE SEPARATION EXCEEDS 14 FEET DUE TO REQUIRED HEIGHT CLEARANCE AND GRADE CONDITIONS, AND THE ENFORCING AGENCY FINDS THAT BECAUSE OF RIGHT-OF-WAY RESTRICTIONS, TOPOGRAPHY OR NATURAL BARRIERS, WHEELCHAIR ACCESSIBILITY OR EQUIVALENT FACILITATION WOULD CREATE AN UNREASONABLE HARDSHIP, SUCH ACCESSIBILITY NEED NOT BE PROVIDED, HOWEVER THE REQUIREMENTS IN THESE REGULATIONS RELATING TO OTHER TYPES OF MOBILITY SHALL BE COMPLIED WITH.

2. FOR EXISTING FACILITIES, THIS SECTION SHALL NOT APPLY WHERE, DUE TO LEGAL OR PHYSICAL CONSTRAINTS, THE SITE OF THE PROJECT WILL NOT ALLOW COMPLIANCE WITH THESE REGULATIONS OR EQUIVALENT FACILITATION WITHOUT CREATING AN UNREASONABLE HARDSHIP.

PEDESTRIAN GRADE SEPARATIONS (OVERPASSES AND UNDER PASSES)

PEDESTRIAN RAMPS ON PEDESTRIAN GRADE SEPARATIONS SHALL COMPLY WITH THE REQUIREMENTS FOR RAMPS.

ACCESSIBLE PARKING REQUIRED

GENERAL: EACH LOT OR PARKING STRUCTURE WHERE PARKING IS PROVIDED FOR THE PUBLIC AS CLIENTS, GUESTS OR ENPLOYEES, SHALL PROVIDE ACCESSIBLE PARKING AS REQUIRED BY THIS SECTION. ACCESSIBLE PARKING SPACES SERVING A PARTICULAR BUILDING SHALL BE LOCATED ON THE SHORTEST ACCESSIBLE ROUTE OF TRAVEL FROM ADJACENT PARKING TO AN ACCESSIBLE ENTRANCE. IN PARKING FACILITIES THAT DO NOT SERVE A PARTICULAR BUILDING, ACCESSIBLE PARKING SHALL BE LOCATED ON THE SHORTEST ACCESSIBLE ROUTE OF TRAVEL TO AN ACCESSIBLE PEDESTRIAN ENTRANCE OF THE PARKING FACILITY. IN BUILDINGS WITH MULTIPLE ACCESSIBLE ENTRANCES WITH ADJACENT PARKING, ACCESSIBLE PARKING SPACES SHALL BE DISPERSED AND LOCATED CLOSEST TO THE ACCESSIBLE ENTRANCES.

EXCEPTION: THIS SUBSECTION SHALL NOT APPLY TO EXISTING FACILITIES WHERE COMPLIANCE WITH LOCAL ORDINANCES PRECLUDES SATISFYING THE ABOVE REQUIREMENTS OR OF PROVIDING EQUIVALENT FACILITATION UNLESS A CHANGE OF OCCUPANCY OCCURS.

LESS THAN FIVE SPACES: WHEN LESS THAN FIVE PARKING SPACES ARE PROVIDED AT BUILDINGS AND FACILITIES SUBJECT TO THESE REGULATIONS, ONE SHALL BE 17 FEET WIDE AND LINED TO PROVIDE A 12-FOOT PARKING AREA AND A 5-FOOT LOADING AND UNLOADING AREA.

EXCEPTION: THE PARKING AREA MAY BE 9-FOOT WIDE IF THE THE LOADING AND UNLOADING AREA IS A MINIMUM OF 8-FOOT WIDE.

PARKING SPACE SIZE: ACCESSIBLE PARKING SPACES SHALL BE LOCATED AS NEAR AS PRACTICAL TO A PRIMARY ENTRANCE AND SHALL BE SIZED AS FOLLOWS:

1. DIMENSIONS: WHERE SINGLE SPACES ARE PROVIDED, THEY SHALL BE 14 FEET WIDE AND OUTLINED TO PROVIDE A 9-FOOT PARKING AREA AND A 5-FOOT LOADING AND UNLOADING ACCESS AISLE ON THE PASSENGER SIDE OF THE VEHICLE. WHEN MORE THAN ONE SPACE IS PROVIDED IN LIEU OF PROVIDING A 14-FOOT-WIDE SPACE FOR EACH PARKING SPACE, TWO SPACES CAN BE PROVIDED WITHIN A 23-FOOT-WIDE AREA LINED TO PROVIDE A 9-FOOT PARKING AREA ON EACH SIDE OF A 5-FOOT LOADING AND UNLOADING ACCESS AISLE IN THE CENTER. THE MINIMUM LENGTH OF EACH PARKING SPACE SHALL BE 18 FEET.

2. VAN SPACE(S): ONE IN EVERY SIX ACCESSIBLE SPACES, BUT NOT LESS THAN ONE, SHALL BE SERVED BY AN ACCESS AISLE 96 INCHES WIDE MINIMUM AND SHALL BE DESIGNATED VAN ACCESSIBLE. ALL SUCH SPACES MAY BE GROUPED ON ONE LEVEL OF A PARKING STRUCTURE.

3. ARRANGEMENT OF PARKING SPACE: IN EACH PARKING AREA, A BUMPER OR CURB SHALL BE PROVIDED AND LOCATED TO PREVENT ENCROACHMENT OF CARS OVER THE REQUIRED WIDTH OF WALKWAYS. ALSO, THE SPACE SHALL BE SO LOCATED THAT PERSONS WITH DISABILITIES ARE NOT COMPELLED TO WHEEL OR WALK BEHIND PARKED CARS OTHER THAN THEIR OWN. PEDESTRIAN WAYS WHICH ARE ACCESSIBLE TO PERSONS WITH DISABILITIES SHALL BE PROVIDED FROM EACH SUCH PARKING SPACE TO RELATED FACILITIES, INCLUDING CURB CUTS OR RAMPS AS NEEDED. RAMPS SHALL NOT ENCROACH INTO ANY PARKING SPACE.

EXCEPTIONS:
1. RAMPS LOCATED AT THE FRONT OF ACCESSIBLE PARKING SPACES MAY ENCROACH INTO THE LENGTH OF SUCH SPACES WHEN SUCH ENCROACHMENT DOES NOT LIMIT THE CAPABILITY OF A PERSON WITH A DISABILITY TO LEAVE OR ENTER A VEHICLE, THUS PROVIDING EQUIVALENT FACILITATION.

2. WHERE THE ENFORCING AGENCY DETERMINES THAT COMPLIANCE WITH ANY REGULATION OF THIS SECTION WOULD CREATE AN UNREASONABLE HARDSHIP, A VARIANCE OR WAIVER MAY BE GRANTED WHEN EQUIVALENT FACILITATION IS PROVIDED.

3. PARKING SPACES MAY BE PROVIDED WHICH WOULD REQUIRE A PERSON WITH A DISABILITY TO WHEEL OR WALK BEHIND OTHER THAN ACCESSIBLE PARKING SPACES WHEN THE ENFORCING AGENCY DETERMINES THAT COMPLIANCE WITH THESE REGULATIONS OR PROVIDING EQUIVALENT FACILITATION WOULD CREATE AN UNREASONABLE HARSHIP.

4. SLOPE OF PARKING SPACE: SURFACE SLOPES OF ACCESSIBLE PARKING SPACES SHALL BE THE MINIMUM POSSIBLE AND SHALL NOT EXCEED 1 UNIT VERTICAL TO 50 UNITS HORIZONTAL (2% SLOPE) IN ANY DIRECTION.

IDENTIFICATION OF PARKING SPACES FOR OFF STREET PARKING FACILITIES: EACH PARKING SPACE RESERVED FOR PERSONS WITH DISABILITIES SHALL BE IDENTIFIED BY A REFLECTORIZED SIGN PERMANENTLY POSTED IMMEDIATELY ADJACENT TO AND VISIBLE FROM EACH STALL OR SPACE, CONSISTING OF A PROFILE VIEW OF A WHEELCHAIR WITH OCCUPANT IN WHITE ON DARK BLUE BACKGROUND. THE SIGN SHALL NOT BE SMALLER THAN 70 SQUARE INCHES IN AREA AND, WHEN IN A PATH OF TRAVEL, SHALL BE POSTED AT A MINIMUM HEIGHT OF 80 INCHES FROM THE BOTTOM OF THE SIGN TO THE PARKING SPACE FINISHED GRADE. SIGNS MAY ALSO BE CENTERED ON THE WALL AT THE INTERIOR END OF THE PARKING SPACE AT A MINIMUM HEIGHT OF 36 INCHES FROM THE PARKING SPACE FINISHED GRADE, GROUND OR SIDEWALK.

AN ADDITIONAL SIGN SHALL ALSO BE POSTED IN A CONSPICUOUS PLACE AT EACH ENTRANCE TO OFF-STREET PARKING FACILITIES, OR IMMEDIATELY ADJACENT TO AND VISIBLE FROM EACH STALL OR SPACE. THE SIGN SHALL NOT BE LESS THAN 17 INCES BY 22 INCHES IN SIZE WITH LETTERING NO LESS THAN 1 INCH IN HEIGHT, WHICH CLEARLY AND CONSPICUOUSLY STATES THE FOLLOWING:

"UNAUTHORIZED VEHICLES PARKED IN DESIGNATED ACCESSIBLE SPACES NOT DISPLAYING DISTINGUISHING PLACARDS OR LICENSE PLATES ISSUED FOR PERSONS WITH DISABILITIES MAY BE TOWED AWAY AT OWNER'S EXPENSE.

IN ADDITION TO THE ABOVE REQUIREMENTS, THE SURFACE OF EACH ACCESSIBLE PARKING SPACE OR STALL SHALL HAVE A SURFACE IDENTIFICATION DUPLICATING EITHER OF THE FOLLOWING SCHEMES:

1. BY OUTLINING OR PAINTING THE STALL OR SPACE IN BLUE AND OUTLINING ON THE GROUND IN THE STALL OR SPACE IN WHITE OR SUITABLE CONTRASTING COLOR A PROFILE VIEW DEPICTING A WHEELCHAIR WITH OCCUPANT; OR

2. BY OUTLINING A PROFILE VIEW OF A WHEELCHAIR WITH OCCUPANT IN WHITE ON BLUE BACKGROUND. THE PROFILE VIEW SHALL BE LOCATED SO THAT IT IS VISIBLE TO A TRAFFIC ENFORCEMENT OFFICER WHEN A VEHICLE IS PROPERLY PARKED IN THE SPACE AND SHALL BE 36 INCHES HIGH BY 36 INCHES WIDE.

ACCESSIBILITY FOR ENTRANCES, EXITS AND PATH OF TRAVEL.

ENTRANCES: ALL ENTRANCES AND EXTERIOR GROUND-FLOOR EXIT DOORS TO BUILDINGS AND FACILITIES SHALL BE MADE ACCESSIBLE TO PERSONS WITH DISABILITIES. DOORWAYS SHALL HAVE A MINIMUM CLEAR OPENING OF 32 INCHES WITH THE DOOR OPEN 90 DEGREES, MEASURED BETWEEN THE FACE OF THE DOOR AND THE OPPOSITE STOP.

DOORS

HINGED DOORS: FOR HINGED DOORS, THE OPENING WIDTH SHALL BE MEASURED WITH DOOR POSITIONED AT AN ANGLE 90 DEGREES FROM ITS CLOSED POSITION.

PAIRS OF DOORS: WHERE A PAIR OF DOORS IS UTILIZED, AT LEAST ONE OF THE DOORS SHALL PROVIDE A CLEAR, UNOBSTRUCTED OPENING WIDTH OF 32 INCHES WITH THE LEAF POSITIONED AT AN ANGLE OF 90 DEGREES FROM ITS CLOSED POSITION.

FLOOR LEVEL AT DOORS: REGARDLESS OF THE OCCUPANT LOAD, THERE SHALL BE A FLOOR OR LANDING AT EACH SIDE OF A DOOR.

THRESHOLDS: THE FLOOR OR LANDING SHALL NOT BE MORE THAN $\frac{1}{2}$" LOWER THAN THE THRESHOLD OF THE DOORWAY. CHANGE IN LEVEL BETWEEN $\frac{1}{4}$" AND $\frac{1}{2}$" SHALL BE BEVELED WITH A SLOPE NO GREATER THAN 1 UNIT VERTICAL TO 2 UNITS HORIZONTAL (50%). CHANGE IN LEVEL GREATER THAN $\frac{1}{2}$" SHALL BE ACCOMPLISHED BY MEANS OF A RAMP.

MANEUVERING CLEARANCES AT DOORS: MINIMUM MANEUVERING CLEARANCES AT DOORS SHALL BE PER CBC 11B-404.2.4 THE FLOOR OR GROUND AREA WITHIN REQUIRED CLEARANCES SHALL BE LEVEL AND CLEAR.

THE LEVEL AREA SHALL HAVE A LENGTH IN THE DIRECTION OF DOOR SWING OF AT LEAST 60 INCHES AND THE LENGTH OPPOSITE THE DIRECTION OF SWING OF 48 INCHES AS MEASURED AT RIGHT ANGLES TO THE PLANE OF THE DOOR IN ITS CLOSED POSITION.

EXCEPTIONS: 1. THE LENGTH OPPOSITE THE DIRECTION OF DOOR SWING SHALL BEA MINIMUM OF 44 INCHES WHERE THE DOOR HAS NO CLOSER AND APPROACH TO THE DOOR BY A PERSON IN A WHEELCHAIR CAN BE MADE FROM THE LATCH SIDE, OR IF THE DOOR HAS NEITHER LATCH NOR CLOSER AND APPROACH CAN BE MADE FROM THE HINGE SIDE.

2. IN GROUP R OCCUPANCIES, THE LEVEL AREA SHALL HAVE A LENGTH BOTH IN THE DIRECTION OF DOOR SWING AND OPPOSITE THE DIRECTION OF DOOR SWING OF 44 INCHES AS MEASURED AT RIGHT ANGLES TO THE PLANE OF THE DOOR IN ITS CLOSED POSITION.

THE WIDTH OF THE LEVEL AREA ON THE SIDE TO WHICH THE DOOR SWINGS SHALL EXTEND 24 INCHES PAST THE STRIKE EDGE OF THE DOOR FOR EXTERIOR DOORS AND 18 INCHES PAST THE STRIKE EDGE FOR INTERIOR DOORS.

NOTE: 24" IS PREFERRED FOR STRIKE SIDE CLEARANCE.

THE SPACE BETWEEN TWO CONSECUTIVE DOOR OPENINGS IN A VESTIBULE, SERVING OTHER THAN A REQUIRED EXIT STAIRWAY SHALL PROVIDE A MINIMUM OF 48 INCHES OF CLEAR SPACE FROM AND DOOR OPENING INTO SUCH VESTIBULE WHEN THE DOOR IS POSITIONED AT AN ANGLE OF 90 DEGREES FROM ITS CLOSED POSITION. DOORS IN A SERIES SHALL SEEING EITHER IN THE SAME DIRECTION OR AWAY FROM THE SPACE BETWEEN THE DOORS.

CLOSER - EFFORT TO OPERATE DOORS: MAXIMUM EFFORT TO OPERATE DOORS SHALL NOT EXCEED 8 $\frac{1}{2}$ POUNDS FOR EXTERIOR DOORS AND 5 POUNDS FOR INTERIOR DOORS, SUCH PULL OR PUSH EFFORT BEING APPLIED AT RIGHT ANGLES TO HINGED DOORS AND AT THE CENTER PLANE OF SLIDING OR FOLDING DOORS. COMPENSATING DEVICES OR AUTOMATIC DOOR OPERATORS MAY BE UTILIZED TO MEET THE ABOVE STANDARDS. WHEN FIRE DOORS ARE REQUIRED, THE MAXIMUM EFFORT TO OPERATE THE DOOR MAY BE INCREASED TO THE MINIMUM ALLOWABLE BY THE APPROPRIATE ADMINISTRATIVE AUTHORITY, NOT TO EXCEED 15 POUNDS.

HAND-ACTIVATED DOOR OPENING HARDWARE SHALL BE CENTERED BETWEEN 30 INCHES AND 44 INCHES ABOVE THE FLOOR. LATCHING AND LOCKING DOORS THAT ARE HAND-ACTIVATED AND WHICH ARE IN A PATH OF TRAVEL SHALL BE OPERABLE WITH A SINGLE EFFORT BY LEVER-TYPE HARDWARE, PANIC BARS, PUSH-PULL ACTIVATING BARS OR OTHER HARDWARE DESIGNED TO PROVIDE PASSAGE WITHOUT REQUIRING THE ABILITY TO GRASP THE OPENING HARDWARE. LOCKED EXIT DOORS SHALL OPERATE AS ABOVE IN EGRESS DIRECTION. DOORS TO INDIVIDUAL HOTEL OR MOTEL UNITS SHALL OPERATE SIMILARLY, EXCEPT THAT WHEN A BOLT AND UNLATCHING OPERATION IS KEY OPERATED FROM CORRIDOR OR EXTERIOR SIDE OF UNIT DOOR, LARGE BOW KEYS 2 INCHES (FULL BOW) OR 1 $\frac{1}{4}$ INCHES (HALF BOW) SHALL BE PROVIDED IN LIEU OF LEVER-TYPE HARDWARE ON THE CORRIDOR SIDE. SEPERATE DEAD LOCK ACTIVATION ON ROOM SIDE OF CORRIDOR DOORS IN HOTELS OR MOTELS SHALL HAVE LEVER HANDLE OR LARGE THUMB TURN ON AN EASILY REACHED LOCATION.

SMOOTH SURFACE: THE BOTTOM 10 INCHES OF ALL DOORS EXCEPT AUTOMATIC AND SLIDING SHALL HAVE A SMOOTH, UNINTERRUPTED SURFACE TO ALLOW THE DOOR TO BE OPENED BY A WHEELCHAIR FOOTREST WITHOUT CREATING A TRAP OR HAZARDOUS CONDITION. WHERE NARROW FRAME DOORS ARE USED, A 10 INCH HIGHT SMOOTH PANEL SHALL BE INSTALLED ON THE PUSH SIDE OF THE DOOR, WHICH WILL ALLOW THE DOOR TO BE OPENED BY A WHEELCHAIR FOOTREST WITHOUT CREATING A TRAP OR HAZARDOUS CONDITION.

RAMPS

GENERAL: RAMPS USED AS EXITS SHALL CONFORM TO THE PROVISIONS OF THIS SECTION. ANY PATH OF TRAVEL SHALL BE CONSIDERED A RAMP IF ITS SLOPE IS GREATER THAN 1 FOOT RISE IN 20 FEET OF HORIZONTAL RUN (5% GRADIENT). THE LEAST POSSIBLE SLOPE SHALL BE USED FOR ANY RAMP.

SLOPE: THE MAXIMUM SLOPE OF A RAMP THAT SERVES ANY EXIT WAY, PROVIDES ACCESS FOR PERSONS WITH PHYSICAL DISABILITIES OR IS IN THE PATH OF TRAVEL SHALL BE 1-FOOT RISE IN 12 FEET OF HORIZONTAL RUN (8.3% GRADIENT).

CROSS SLOPE: THE CROSS SLOPE OF RAMP SURFACES SHALL BE NO GREATER THAN 1 UNIT VERTICAL IN 50 UNITS HORIZONTAL (2% SLOPE).

SIZE OF TOP LANDING: TOP LANDINGS SHALL BE NO LESS THAN 60 INCHES WIDE AND SHALL HAVE A LENGTH OF NOT LESS THAN 60 INCHES IN THE DIRECTION OF THE RAMP RUN.

HAZARDS: REQUIRED RAMPS SHALL HAVE A CURB AT LEAST 2 INCHES HIGH, OR A WHEEL GUIDE RAIL 2 TO 4 INCHES HIGH ON EACH SIDE OF THE RAMP LANDING THAT HAS A VERTICAL DROP EXCEEDING 4 INCHES AND THAT IS NOT BOUNDED BY A WALL OR FENCE.

HANDRAILS FOR RAMPS: HANDRAILS ARE REQUIRED ON RAMPS THAT PROVIDE ACCESS IF SLOPES EXCEED 1-FOOT RISE IN 20 FEET OF HORIZONTAL RUN (5% GRADIENT), EXCEPT THAT AT EXTERIOR DOOR LANDINGS, HANDRAILS ARE NOT REQUIRED ON RAMPS LESS THAN 6 INCHES RISE OR 72 INCHES IN LENGTH. HANDRAILS SHALL BE PLACED ON EACH SIDE OF EACH RAMP, SHALL BE CONTINUOUS THE FULL LENGTH OF THE RAMP, SHALL BE 34 TO 38 INCHES ABOVE THE RAMP SURFACE, SHALL EXTEND A MINIMUM OF 1 FOOT BEYOND THE TOP AND BOTTOM OF THE RAMP AND THE ENDS SHALL BE RETURNED. HANDRAILS PROJECTING FROM A WALL SHALL HAVE A SPACE OF NOT LESS THAN 1 $\frac{1}{2}$" BETWEEN THE WALL AND THE HANDRAIL. HANDRAILS MAY BE LOCATED IN A RECESS IF THE RECESS IS A MAXIMUM OF 3 INCHES DEEP AND EXTENDS AT LEAST 18 INCHES ABOVE THE TOP OF THE RAIL. THE GRIP PORTION SHALL NOT BE LESS THAN 1 $\frac{1}{4}$ INCHES NOR MORE THAN 1 $\frac{1}{2}$ INCHES, OR THE SHAPE SHALL PROVIDE AN EQUIVALENT GRIPPING SURFACE AND ALL SURFACES SHALL BE SMOOTH WITH NO SHARP CORNERS. HANDRAILS SHALL NOT ROTATE WITHIN THEIR FITTINGS. ANY WALL OR OTHER SURFACE ADJACENT TO THE HANDRAIL SHALL BE FREE OF SHARP OR ABRASIVE ELEMENTS. EDGES SHALL HAVE A MINIMUM RADIUS OF $\frac{1}{8}$ INCH.

EXCEPTIONS: 1. HANDRAILS AT RAMPS IMMEDIATELY ADJECENT TO FIXED SEATING IN ASSEMBLY AREAS ARE NOT REQUIRED.
2. RAMPS THAT REQUIRE HANDRAILS AND THAT SERVE ONE INDIVIDUAL DWELLING UNIT IN GROUP R, DIVISION 1 OR 3 OCCUPANCIES MAY HAVE ONE HANDRAIL EXCEPT THAT SUCH RAMPS OPEN ON ONE OR BOTH SIDES SHALL HAVE HANDRAILS PROVIDED ON THE OPEN SIDE OR SIDES.

WHEEL GUIDES: WHERE THE RAMP SURFACE IS NOT BOUNDED BY A WALL OR FENCE AND RAMP EXCEEDS 10 FEET IN LENGTH, THE RAMP SHALL COMPLY WITH ONE OF THE FOLLOWING REQUIREMENTS.

A GUIDE CURB A MINIMUM OF 2 INCHES IN HEIGHT SHALL BE PROVIDED AT EACH SIDE OF THE RAMP; OR

A WHEEL GUIDE RAIL SHALL BE PROVIDED, CENTERED 3 INCHES PLUS OR MINUS 1 INCH ABOVE THE SURFACE OF THE RAMP.

RAMPS MORE THAN 30 INCHES ABOVE THE ADJACENT GROUND SHALL BE PROVIDED WITH GUARDRAILS AS REQUIRED BY SECTION 509, AND HANDRAILS AS REQUIRED. SUCH GUARDRAILS SHALL BE CONTINUOUS FROM THE TOP OF THE RAMP TO THE BOTTOM OF THE RAMP.

AISLES:

GENERAL: EVERY PORTION OF EVERY BUILDING IN WHICH ARE INSTALLED SEATS, TABLES, MERCHANDISE, EQUIPMENT OR SIMILAR MATERIALS SHALL BE PROVIDED THE AISLES LEADING TO AN EXIT.

WIDTH: EVERY AISLE SHALL NOT BE LESS THAN 36 INCHES WIDE IF SERVING ONLY ONE SIDE, AND NOT LESS THAN 44 INCHES WIDE IF SERVING BOTH SIDES.

WALKS AND SIDEWALKS:

CONTINUOUS SURFACE: WALKS AND SIDEWALKS SUBJECT TO THESE REGULATIONS SHALL HAVE A CONTINUOUS COMMON SURFACE, NOT INTERRUPTED BY STEPS OR BY ABRUPT CHANGES IN LEVEL EXCEEDING $\frac{1}{2}$ INCH, AND SHALL BE A MINIMUM OF 48 INCHES IN WIDTH. SURFACES SHALL BE SLIP-RESISTANT AS FOLLOWS:

SLOPES LESS THAN 6 PERCENT: SURFACES WITH A SLOPE LESS THAN 6 PERCENT GRADIENT SHALL BE AT LEAST AS SLIP-RESISTANT AS THAT DESCRIBED AS A MEDIUM SALTED FINISH.

SLOPES 6 PERCENT OR GREATER: SURFACES WITH A SLOPE OF 6 PERCENT GRADIENT SHALL BE SLIP-RESISTANT.

SURFACE CROSS SLOPES: SURFACE CROSS SLOPES SHALL NOT EXCEED $\frac{1}{4}$ INCH PER FOOT EXCEPT WHEN THE ENFORCING AGENCY FINDS THAT DUE TO LOCAL CONDITIONS IT CREATES AN UNREASONABLE HARDSHIP, THE CROSS SLOPE SHALL BE INCREASED TO A MAXIMUM OF $\frac{1}{2}$ INCH PER FOOT FOR DISTANCES NOT TO EXCEED 20 FEET (2.5% GRADIENT.

EXCEPTION: WHEN, BECAUSE OF RIGHT-OF-WAY RESTRICTIONS, NATURAL BARRIERS OR OTHER EXISTING CONDITIONS, THE ENFORCING AGENCY DETERMINES THAT COMPLIANCE WITH THE 48-INCH CLEAR SIDEWALK WIDTH WOULD CREATE AN UNREASONABLE HARDSHIP, THE CLEAR WIDTH MAY BE REDUCED TO 36 INCHES.

GRATINGS: WALKS, SIDEWALKS AND PEDESTRIAN WAYS SHALL BE FREE OF GRATINGS WHENEVER POSSIBLE. FOR GRATINGS LOCATED IN THE SURFACE OF ANY OF THESE AREAS, GRID OPENINGS IN GRATINGS SHALL BE LIMITED TO $\frac{1}{2}$ INCH IN THE DIRECTION OF TRAFFIC FLOW.

EXCEPTIONS: 1. WHERE THE ENFORCING AGENCY DETERMINES THAT COMPLIANCE WITH THIS SECTION WOULD CREATE AN UNREASONABLE HARDSHIP, AN EXCEPTION MAY BE GRANTED WHEN EQUIVALENT FACILITATION IS PROVIDED.
2. THIS SECTION SHALL NOT APPLY IN THOSE CONDITIONS WHERE, DUE TO LEGAL OR PHYSICAL CONSTRAINTS, THE SITE OF THE PROJECT WILL NOT ALLOW COMPLIANCE WITH THESE BUILDING STANDARDS OR EQUIVALENT FACILITATION WITHOUT CREATING AN UNREASONABLE HARDSHIP.

Landscape Architect:

David Volz Design
Landscape Architecture & Park Planning

Costa Mesa Office:
151 Kalmus Drive, Suite M8
Costa Mesa, CA 92626
Phone: (714) 641-1300
Fax: (714) 641-1323

e-mail: drawings@dvolzdesign.com
www.dvolzdesign.com

Subconsultant:

Seal:

811 DIGALERT

UNDERGROUND SERVICE ALERT OF SOUTHERN CALIFORNIA

Revisions:

No.	Date	Revisions	By

Project :
JACK HAMMETT SPORTS COMPLEX
LANDSCAPE, PARKING LOT EXPANSION & BUILDING IMPROVEMENTS
2750 FAIRVIEW ROAD

Owner:
City of Costa Mesa

Project No :
Drawn By : LP
Checked By : DV
Date : NOVEMBER 2019
Scale : AS SHOWN

Drawing Title :
ACCESSIBILITY NOTES

Drawing No :
A1.1

SHEET 20 OF 41

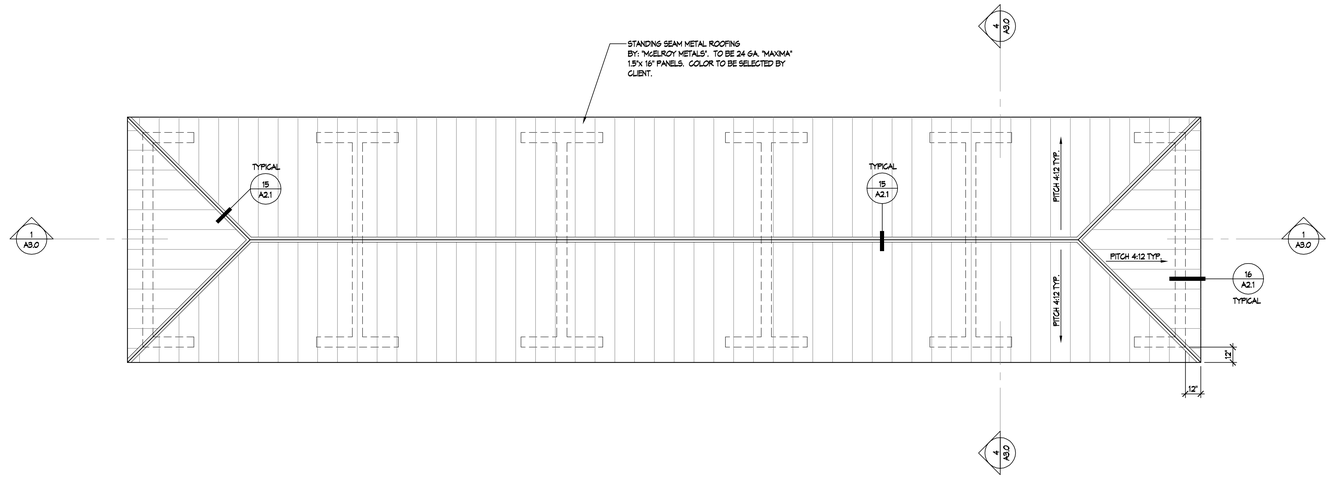

ROOF PLAN (STORAGE BUILDING NO.1) SCALE: 1/4"=1'-0" 2

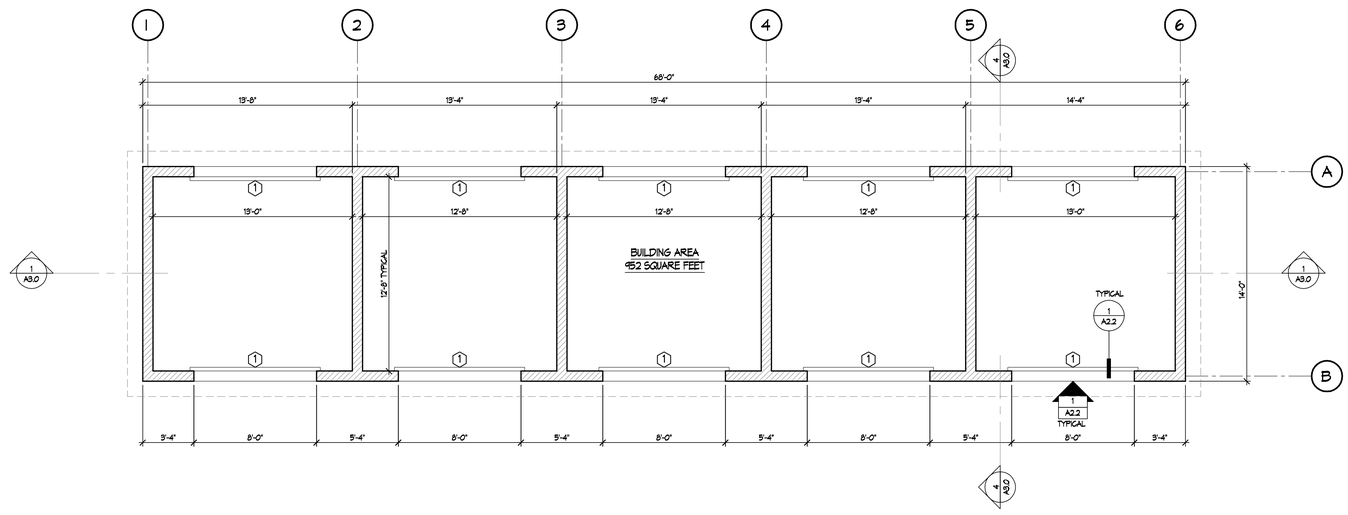

FLOOR PLAN (STORAGE BUILDING NO.1) SCALE: 1/4"=1'-0" 4

Landscape Architect:

David Volz Design
Landscape Architecture & Park Planning

Costa Mesa Office:
151 Kalmus Drive, Suite M8
Costa Mesa, CA 92626
Phone: (714) 641-1300
Fax: (714) 641-1323

e-mail: drawings@dvolzdesign.com
www.dvolzdesign.com

Subconsultant:

Seal:

LICENSED ARCHITECT
JOHN E. WELLS
C-14232
EXP. 3-31-20
STATE OF CALIFORNIA

811 DIGALERT
UNDERGROUND SERVICE ALERT OF SOUTHERN CALIFORNIA

ATTENTION IS DIRECTED TO THE POSSIBLE EXISTENCE OF UNDERGROUND FACILITIES NOT KNOWN OR IN A LOCATION DIFFERENT FROM THAT SHOWN ON THE PLANS. IN ADDITION TO THE SPECIAL PROVISIONS, THE CONTRACTOR SHALL TAKE STEPS TO ASCERTAIN THE EXACT LOCATION OF ALL UNDERGROUND FACILITIES TO AVOID INTERFERENCE OR DAMAGE SUCH FACILITIES OR INTERFERE WITH THEIR SERVICE.

BEFORE EXCAVATING, THE CONTRACTOR SHALL VERIFY THE LOCATION OF UNDERGROUND UTILITIES BY CONTACTING UNDERGROUND SERVICE ALERT AT 1-(800)-422-4133.

Revisions:

No.	Date	Revisions	By

Project :
JACK HAMMETT SPORTS COMPLEX
LANDSCAPE, PARKING LOT EXPANSION & BUILDING IMPROVEMENTS
2750 FAIRVIEW ROAD

Owner:
City of Costa Mesa

Project No :
Drawn By : LP
Checked By : DV
Date : NOVEMBER 2019
Scale : AS SHOWN

Drawing Title :
ARCHITECTURAL PLANS
Storage Bld'g. No.1

Drawing No :
A2.0

SIGNAGE

ALL WORK SHALL COMPLY WITH THE LATEST EDITION OF THE CBC AND THE AMERICANS WITH DISABILITIES ACCESSIBILITY GUIDELINES.

IDENTIFICATION SYMBOLS (FOR SANITARY FACILITIES)

NOTE: SANITARY FACILITIES ARE REQUIRED TO PROVIDE TWO SEPARATE TYPES OF SIGNAGE; ONE TYPE LOCATED ON THE DOORWAY TO THE FACILITY, AND ANOTHER TYPE MOUNTED ON THE WALL ADJACENT TO THE LATCH SIDE OF THE DOOR.

WALL MOUNTED SIGNAGE

1. THE INTERNATIONAL SYMBOL OF ACCESSIBILITY IS INSTALLED ON THE WALL ADJACENT TO THE LATCH SIDE OF THE DOOR. THE BORDER DIMENSION OF THE PICTOGRAM SHALL BE A MINIMUM OF 6" IN HEIGHT.
2. VERBAL DESCRIPTION AS TO THE USAGE (I.E. ACCESSIBLE, ETC.), IS PLACED DIRECTLY BELOW THE SYMBOL OF ACCESSIBILITY.
3. THE CHARACTERS AND BACKGROUND OF THE SIGN IS EGGSHELL, MATTE, OR OTHER NON-GLARE FINISH AND THE COLOR CONTRAST OF THE SIGN DISTINCTIVELY CONTRASTS WITH COLOR AND CONTRAST OF THE WALL.

NOTE: THE REQUIRED COLOR OF THE SYMBOL OF ACCESSIBILITY CONSISTS OF A WHITE FIGURE ON A BLUE BACKGROUND. HOWEVER, THE APPROPRIATE ENFORCEMENT AGENCY MAY APPROVE SPECIAL SIGNS TO COMPLIMENT DECOR WHEN SUCH SIGNS PROVIDE ADEQUATE DIRECTION TO INDIVIDUALS WITH DISABILITIES.

4. SIGNS SHALL BE LOCATED ON THE WALL AND DOOR AS SPECIFIED IN THE CURRENT CBC. REFER TO SHEET 2.1/10 FOR ADDITIONAL INFORMATION
5. LETTERS AND NUMERALS ARE RAISED 1/32", ARE SANS-SERIF UPPERCASE CHARACTERS AND ARE ACCOMPANIED BY GRADE 2 BRAILLE. CHARACTERS ARE MINIMUM 5/8" HIGH AND A MAXIMUM OF 2" HIGH.

SIGNAGE NOTES — SCALE: N.T.S. — 5

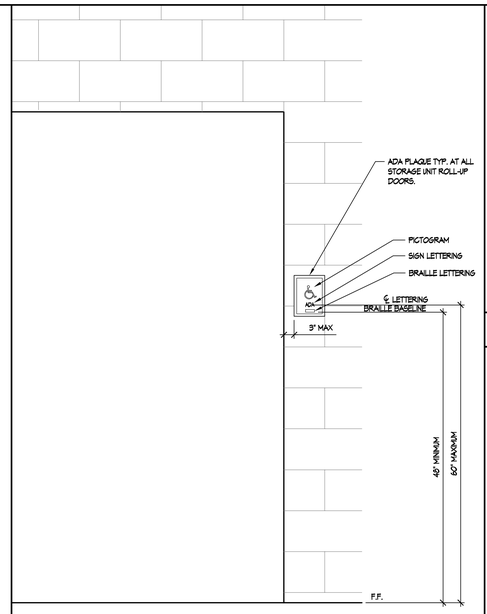

DOOR ADA SIGNAGE — SCALE: N.T.S. — 10

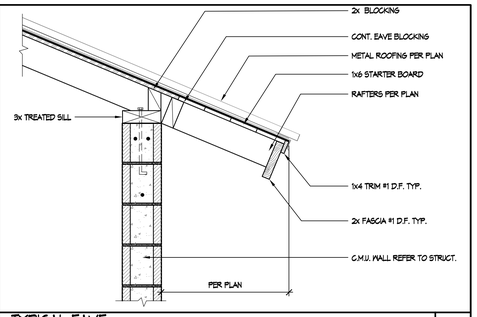

TYPICAL EAVE — SCALE: 1"=1'-0" — 13

NOT USED — SCALE: N.T.S. — 14

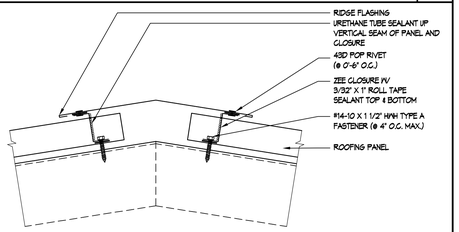

INSTALLER NOTE:
TEMPORARY FASTENER MAY BE REQUIRED TO KEEP PANELS FROM SLIDING DOWNHILL DURING INSTALLATION.

TYPICAL RIDGE OR HIP METAL ROOFING — SCALE: N.T.S. — 15

** CLEARANCE REQUIRED FOR THERMAL MOVEMENT

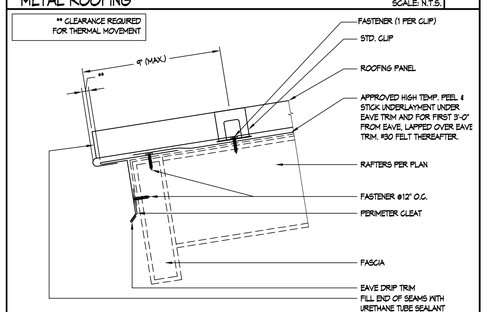

TYPICAL EAVE METAL ROOFING — 16

Landscape Architect:

David Volz Design
Landscape Architecture & Park Planning

Costa Mesa Office:
151 Kalmus Drive, Suite M8
Costa Mesa, CA 92626
Phone: (714) 641-1300
Fax: (714) 641-1323

e-mail: drawings@dvolzdesign.com
www.dvolzdesign.com

Subconsultant:

Seal:

LICENSED ARCHITECT — JOHN E. WELLS — C-14232 — EXP. 12-31-20 — STATE OF CALIFORNIA

811 DIGALERT

UNDERGROUND SERVICE ALERT OF SOUTHERN CALIFORNIA

ATTENTION IS DIRECTED TO THE POSSIBLE EXISTENCE OF UNDERGROUND FACILITIES NOT KNOWN OR IN A LOCATION DIFFERENT FROM THAT SHOWN ON THE PLANS. IN ADDITION TO THE SPECIAL PROVISIONS, THE CONTRACTOR SHALL TAKE STEPS TO ASCERTAIN THE EXACT LOCATION OF ALL UNDERGROUND FACILITIES WHICH MAY INTERFERE OR BE DAMAGE SUCH FACILITIES OR INTERFERE WITH THEIR SERVICE.

BEFORE EXCAVATING, THE CONTRACTOR SHALL VERIFY THE LOCATION OF UNDERGROUND UTILITIES BY CONTRACTING UNDERGROUND SERVICE ALERT AT 1-(800)-422-4133.

Revisions:

No.	Date	Revisions	By

Project :
JACK HAMMETT SPORTS COMPLEX
LANDSCAPE, PARKING LOT EXPANSION & BUILDING IMPROVEMENTS
2750 FAIRVIEW ROAD

Owner:
City of Costa Mesa

Project No :	
Drawn By :	LP
Checked By :	DV
Date :	NOVEMBER 2019
Scale :	AS SHOWN

Drawing Title :

ARCHITECTURAL DETAILS

Drawing No :

A2.1

DOOR NUMBER	DOOR							FRAME					HARDWARE	NOTES
	TYPE	LOCATION	SIZE			MAT	FIN	MAT	FIN	DETAILS				
			WIDTH	HEIGHT	THICK					HEAD	JAMB	TRESH.		
STORAGE BUILDINGS														
1	A	STOR. UNIT	8'-0"	8'-0"	"	STEEL	P	STEEL	P	1/ A2.2	1/ A2.2	1/ A2.2	9	

NOTES

1. FURNISHED WITH HARDWARE FROM MANUFACTURER

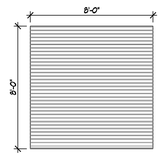

A

DOOR ELEVATIONS/ TYPES

DOOR SCHEDULE

SCALE: N/A

3

BUILDING NAME	ROOM NAME	FLOOR	BASE	WALLS				CEILING	NOTES
				NORTH	EAST	SOUTH	WEST		
STORAGE BUILDINGS	MAINTENANCE & STORAGE	F1	B1	W1	W1	W1	W1	C1	-
-	-	-	-	-	-	-	-	-	-

CEILING SURFACES

C1 EXPOSED PAINTED FRAMING

WALL SURFACES

W1 PAINTED MASONRY

FLOOR SURFACES

F1 UNFINISHED SEALED CONCRETE

BASE MATERIAL

B1 EXPOSED C.M.U., CONRETE OR DRYWALL

PAINT AND FINISH SPECIFICATIONS

PRIOR TO APPLICATION, ALL SURFACES TO BE REPAIRED, PATCHED, CLEANED AND PRIMED AS NECESSARY TO ACHIEVE A SMOOTH PAINTABLE SURFACE, FOLLOWING THE PAINT MANUFACTURERS INSTRUCTIONS AND RECOMMENDATIONS. DURING PRODUCTION ALL SURFACES NOT RECEIVING PAINT SHALL BE PROTECTED AND KEPT CLEAN.

EXTERIOR PAINT: BY DUNN-EDWARDS PAINT CO. (OR EQUIVALENT)
INTERIOR PAINT: BY DUNN-EDWARDS PAINT CO. (OR EQUIVALENT)

METAL SURFACES:	PRIMER: PRIMER: 1ST. COAT: 2ND. COAT:	BLOC-RUST (BRPR00-1) FERROUS METALS GALV-ALUM (GAPR00) NON-FERROUS METALS SYN-LUSTRO (N-4) SYN-LUSTRO (N-4)	INTERIOR CMU WALLS	PRIMER: 1ST. COAT: 2ND. COAT:	BLOCFIL SMOOTH (SBSL00) SPARTASHIELD (S5HL60) SPARTASHIELD (S5HL60)
SMOOTH WOOD SURFACES:	PRIMER: 1ST. COAT: 2ND. COAT:	EZ-PRIME (EZPR00) SPARTASHIELD (S5HL60) SPARTASHIELD (S5HL60)	ANTI GRAFFITI COATING MASONRY WALLS	PRIMER: 1ST. COAT: 2ND. COAT:	- DUMOND CHEMICAL, MATCH DOG CPU DUMOND CHEMICAL, MATCH DOG CPU-147
ROUGH SAWN WOOD SURFACES:	1ST. COAT: 2ND. COAT:	ACRI-HUES (W-T20) ACRI-HUES (W-T20)			

NOTE: COLOR SELECTION TO BE DETERMINED PRIOR TO PRODUCTION.

PAINTING NOTES

1. ALL EXPOSED INTERIOR AND EXTERIOR WOOD SURFACES TO BE PAINTED PER SPECIFICATIONS.
2. ALL METAL DOORS AND FRAMES TO BE PAINTED PER SPECIFICATIONS.
3. ALL METAL GRILL WORK AND SCREENING TO BE PAINTED PER SPECIFICATIONS.
4. ALL UNPAINTED MASONRY SURFACES EXPOSED TO THE PUBLIC TO BE ANTI-GRAFFITI COATED.
5. CONTRACTOR TO FURNISH (6) SAMPLES OF EACH COLOR FOR APPROVAL.
6. ALL PAINTABLE SURFACES IN RESTROOM AREAS TO BE SMOOTH AND WASHABLE. ALL WOOD AND MASONRY TO FINISHED WITH A SEMI-GLOSS ENAMEL PAINT PER SPECIFICATIONS.
7. PRIME AND PAINT ALL FRAMING CONNECTORS AND EXPOSED BOLTS PER SPECIFICATIONS.
8. ALL AND SCREENINS, STEEL GRILLS AND STEEL FRAMES TO BE PRIMED AND PAINTED PER SPECIFICATION.
9. PROVIDE SMOOTH, HARD AND NON-ABSORBENT FINISH PER U.B.C AT ALL RESTROOM WALLS.
10. WALLS WITHIN 24" OF FRONT AND SIDES OF URINAL AND WATER CLOSET ARE SMOOTH, HARD AND NON-ABSORBENT TO 48" IN HEIGHT, AND ARE NOT ADVERSELY AFFECTED BY MOISTURE.
11. COLOR SELECTION TO BE DETERMINED PRIOR TO PRODUCTION.
12. ANTI GRAFFITI COATINGS SHOULD BE USED ON THIS PROJECT UNLESS SPECIFICALLY NOTED OTHERWISE.
13. DUNN-EDWARDS PAINT CO. IS RECOMMENDED, HOWEVER, EQUIVALENT PAINTS ARE ACCEPTABLE SUCH AS: VISTA PAINT, AMERITONE, SHERWIN WILLIAMS, SINCLAIR AND FRAZEE.

CMU BLOCK

1. SUBMIT COLOR AND FINISH SAMPLES FOR APPROVAL

FINISH SCHEDULE AND SPECIFICATIONS

SCALE: N/A

4

- ADA NOTES:
- ADA COMPLIANCE KIT (AVAILABLE FROM MANUFACTURER) consisting of pull ropes and ADA plaque
- A pull must be installed on the door exterior no lower than 15" and no higher than 48"
- Pull must have a loop large enough for a fist to fit into
- A nylon rope must be installed on the bottom bar which hangs 15" – 48" inches when door is open
- Rope must also contain a loop large enough to fit a fist and replaces the traditional rope
- An Accessibility plaque with Braille must be clearly displayed outside of unit
- For exterior units, if ramping is required is should cover the entire width of the unit
- Nylon ropes should be installed at door center, door latch, and door bottom rail

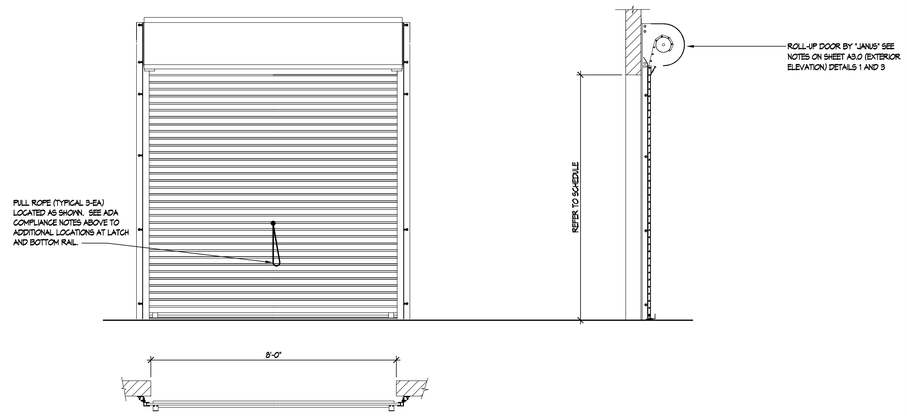

ROLL-UP STEEL DOOR

-

1

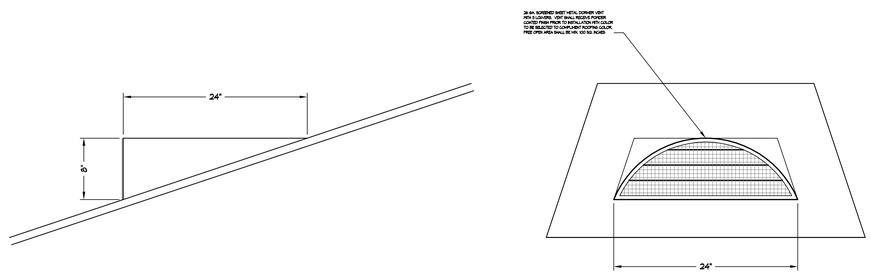

SIDE ELEVATION

FRONT ELEVATION

ROOF DORMER VENTS
(24" HALF ROUND LOUVERED VENT)

2

Landscape Architect:

David Volz Design
Landscape Architecture & Park Planning

Costa Mesa Office:
151 Kalmus Drive, Suite M8
Costa Mesa, CA 92626
Phone: (714) 641-1300
Fax: (714) 641-1323

e-mail: drawings@dvolzdesign.com
www.dvolzdesign.com

Subconsultant:

Seal:

LICENSED ARCHITECT JOHN E. WELLS C-14232 EXP. 3-31-20 STATE OF CALIFORNIA

811 DIGALERT

UNDERGROUND SERVICE ALERT OF SOUTHERN CALIFORNIA

ATTENTION IS DIRECTED TO THE POSSIBLE EXISTENCE OF UNDERGROUND FACILITIES NOT KNOWN OR IN A LOCATION DIFFERENT FROM THAT SHOWN ON THE PLANS. IN ADDITION TO THE SPECIAL PROVISIONS, THE CONTRACTOR SHALL TAKE STEPS TO ASCERTAIN THE EXACT LOCATION OF ALL UNDERGROUND FACILITIES WHICH MAY PREVENT OR DAMAGE SUCH FACILITIES OR INTERFERE WITH THEIR SERVICE.

BEFORE EXCAVATING, THE CONTRACTOR SHALL VERIFY THE LOCATION OF UNDERGROUND UTILITIES BY CONTRACTING UNDERGROUND SERVICE ALERT AT 1-(800)-422-4133.

Revisions:

No.	Date	Revisions	By

Project :
JACK HAMMETT SPORTS COMPLEX
LANDSCAPE, PARKING LOT EXPANSION & BUILDING IMPROVEMENTS
2750 FAIRVIEW ROAD

Owner:
City of Costa Mesa

Project No :	
Drawn By :	LP
Checked By :	DV
Date :	NOVEMBER 2019
Scale :	AS SHOWN

Drawing Title :

ARCHITECTURAL SCHEDULES AND DETAILS

Drawing No :

A2.2

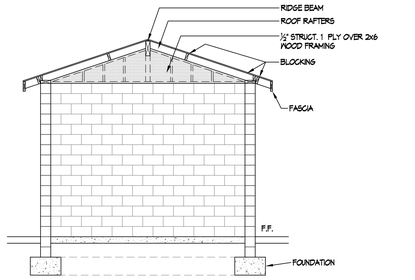

BUILDING SECTION SCALE: 1/4"=1'-0" 4

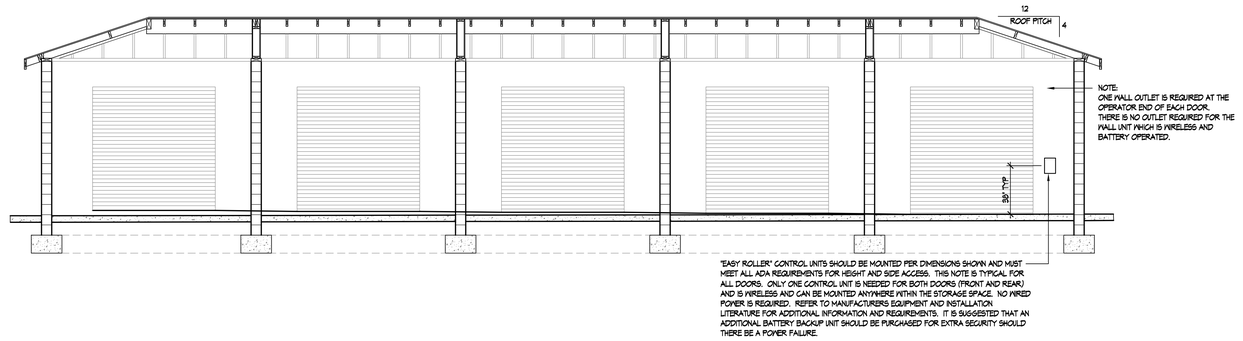

BUILDING SECTION (STORAGE BUILDING NO.1) SCALE: 1/4"=1'-0" 1

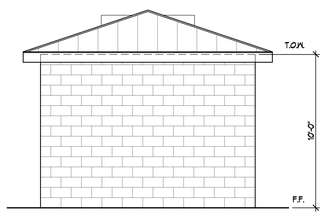

EXT. ELEVATION (LEFT) SCALE: 1/4"=1'-0" 5

EXTERIOR ELEVATION (REAR STORAGE BUILDING NO.1) SCALE: 1/4"=1'-0" 2

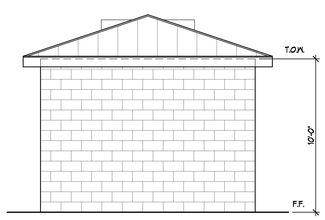

EXT. ELEVATION (RIGHT) SCALE: 1/4"=1'-0" 6

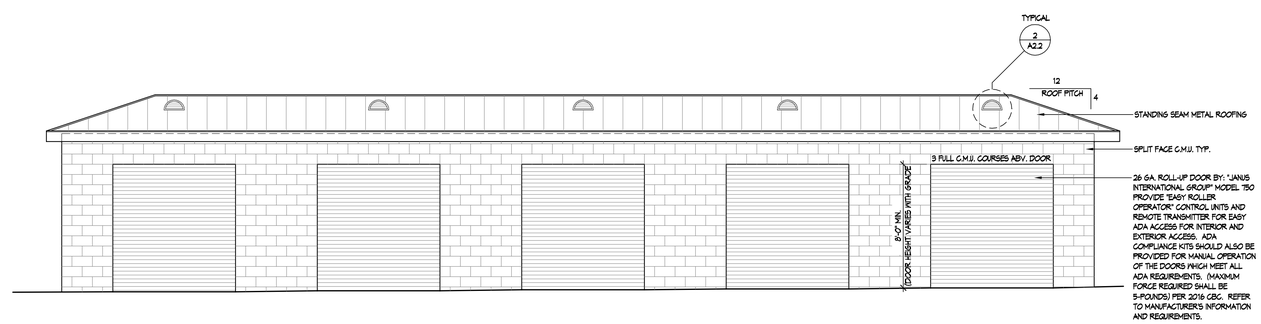

EXTERIOR ELEVATION (FRONT STORAGE BUILDING NO.1) SCALE: 1/4"=1'-0" 3

Landscape Architect:

David Volz Design
Landscape Architecture & Park Planning

Costa Mesa Office:
151 Kalmus Drive, Suite M8
Costa Mesa, CA 92626
Phone: (714) 641-1300
Fax: (714) 641-1323

e-mail: drawings@dvolzdesign.com
www.dvolzdesign.com

Subconsultant:

Seal:

LICENSED ARCHITECT JOHN E. WELLS C-14232 EXP. 1-31-20 STATE OF CALIFORNIA

811 DIGALERT

UNDERGROUND SERVICE ALERT OF SOUTHERN CALIFORNIA

ATTENTION IS DIRECTED TO THE POSSIBLE EXISTENCE OF UNDERGROUND FACILITIES NOT KNOWN OR IN A LOCATION DIFFERENT FROM THAT WHICH IS SHOWN ON THE PLANS OR IN THE SPECIAL PROVISIONS. THE CONTRACTOR SHALL TAKE STEPS TO ASCERTAIN THE EXACT LOCATION OF ALL UNDERGROUND FACILITIES PRIOR TO DOING WORK THAT MAY DAMAGE SUCH FACILITIES OR INTERFERE WITH THEIR SERVICE.

BEFORE EXCAVATING, THE CONTRACTOR SHALL VERIFY THE LOCATION OF UNDERGROUND UTILITIES BY CONTRACTING UNDERGROUND SERVICE ALERT AT 1-(800)-422-4133.

Revisions:

No.	Date	Revisions	By

Project :
JACK HAMMETT SPORTS COMPLEX
LANDSCAPE, PARKING LOT EXPANSION & BUILDING IMPROVEMENTS
2750 FAIRVIEW ROAD
Owner:
City of Costa Mesa

Project No :	
Drawn By :	LP
Checked By :	DV
Date :	NOVEMBER 2019
Scale :	AS SHOWN

Drawing Title :
EXT. ELEVATIONS & BLD'G.SECTIONS
Storage Bldg. No.1

Drawing No :
A3.0

TABLE 2304.10.1 FASTENING SCHEDULE CBC-2016

	DESCRIPTION OF BUILDING ELEMENTS	NUMBER & TYPE OF FASTENER	SPACING & LOCATION
	ROOF		
1.	Blocking between ceiling joists, rafters or trusses to top plate or other framing below	3 – 8d common (2 1 1/2" × 0.131")	Toenail, each end
	Blocking between rafters or truss not at the wall top plate, to rafter or truss	2 – 8d common (2 1/2" × 0.131") 2 – 16d common (2 1/2" × 0.131")	toenail each end end nail
	Flat blocking to truss and web filler	16d common (3 ½" x0.162") @6" o.c.	Face nail
2.	Ceiling joists to top plate	3 – 8d common (2 1 1/2" × 0.131")	Toenail each joist
3.	Ceiling joist not attached to parallel rafter, laps over partitions (no thrust) (Table and Section2308.7.3.1)	3 – 8d common (2 1 1/2" × 0.131")	Face nail
4.	Ceiling joists attached to parallel rafter (heel joint) (Table and Section2308.7.3.1)	Table 2308.7.3.1	Face nail
5.	Collar tie to rafter	3–10d common (3" x0.148")	Face nail
6.	Rafter or roof truss to top plate (Table and section 2308.7.5)	2–10d common (3 1/2" x0.162") 3–10d common (3" x0.148")	end nail Toenail
7.	Roof rafters to ridge valley or hip rafters; or roof rafter to 2" ridge beam	3–10d common (3" x0.148")	End nail
	WALL		
8.	Stud to Stud (not at braced wall panels)	16d common (3 1/2"x0.162")	24" o.c. face nail
9.	Stud to stud and abutting studs at intersecting wall corners (at braced wall panels)	16d common (3 1/2"x0.162")	16" o.c. face nail
10.	Built-up header (2"–12")	16d common (3 1/2"x0.162")	16" o.c. each edge, face nail
11.	Continuous header to stud	4–8d common (2 1/2"x 0.131")	Toenail
12.	Top plate to top plate	16d common	16" o.c. face nail
13.	Top plate to top plate, at end joints	16d common (3 1/2"x0.162")	Each side of end joint, face nail (min 24" lap splice length each side of end joint)
14.	Bottom plate to joist, rim joist, band joist or blocking (not at braced wall panels)	16d common (3 1/2"x0.162")	16" o.c. face nail
15.	Bottom plate to joist, rim joist, band joist or blocking at braced wall panels	2–10d common (3 1/2" x0.162")	16" o.c. face nail
16.	Stud to top or bottom plate	4–8d common (2 1/2"x 0.131") 2–16d common (3 1/2"x 0.162")	Toenail Face nail
17.	Top or bottom plate to stud	2–16d common (3 1 1/2" × 0.162")	End nail
18.	Top plates, laps at corners and intersections	2–16d common (3 1 1/2" × 0.162")	Face nail
19.	1" brace to each stud and plate	2–8d common (2 1/2" x0.131")	Face nail
20.	1" x6" sheathing to each bearing	2–8d common (2 1/2" x0.131")	Face nail
21.	1" x 8" and wider sheathing to each bearing	3–8d common (2 1/2" x0.131")	Face nail

TABLE 2304.10.1 FASTENING SCHEDULE CBC-2016

	FLOOR		
22.	Joist to sill, top plate, or girder	3–8d common (2 1/2" x0.131")	Toenail
23.	Rim joist, band joist, or blocking to top plate, sill or other framing below	8d common (2 1/2" x0.131")	6" o.c., toenail
24.	1" x6" subfloor or less to each joist	2–8d common (2 1/2" x0.131")	Face nail
25.	2" subfloor to joist or girder	2–16d common (3 1/2" x0.162")	Face nail
26.	2" plank (plank& beam– floor & roof)	2–16d common (3 1/2" x0.162")	Each bearing, face nail
27.	Built up girders and beams, 2" lumber layers	20d common (4" x0.192")	32" o.c. face nail at top and bottom staggered on opposite sides
28.	Ledger strip supporting joists or rafters	3–16d common (3 1/2" x0.162")	Each joist or rafter, face nail
29.	Joist to band joist or rim joist	3–16d common (3 1/2" x0.162")	End nail
30.	Bridging or blocking to joist, rafter or truss	2–8d common (2 1/2" x0.131")	Each end, toenail
	WOOD STRUCTURAL PANELS, SUB FLOOR, ROOF AND INTERIOR WALL SHEATHING TO FRAMING AND PARTICLEBOARD WALL SHEATHING TO FRAMING		
31.	3/8" –1/2"	6d common or deformed (2" x0.113") (subfloor and wall)	6" edge , 12" intermediate
32.	19/32" –3/4"	8d common (2 1/2" x0.131")	6" edge , 12" intermediate
33.	7/8" – 1/4"	10d common (3" x0.148")	6" edge , 12" intermediate
	OTHER EXTERIOR WALL SHEATHING		
34.	1/2" fiberboard sheathing(b)	1 ½" galvanized roof nail	3" edge , 6" intermediate
35.	25/32" fiberboard sheathing (b)	1 3/4" galvanized roof nail	3" edge , 6" intermediate
	WOOD STRUCTURAL PANELS, COMBINATION SUBFLOOR UNDERLAYMENT TO FRAMING (a)		
36.	3/4" and less	8d common (2 1/2" x0.131")	6" edge , 12" intermediate
37.	7/8" –1"	8d common (2 1/2" x0.131")	6" edge , 12" intermediate
38.	1 1/8" –1 ¼"	10d common (3" x0.148")	6" edge , 12" intermediate
	PANEL SIDING TO FRAMING		
39.	½" or less	6d corrosion-resistant siding (1 7/8"x0.106")	6" edge , 12" intermediate
40.	5/8"	8d corrosion-resistant siding (2 3/8"x0.126")	6" edge , 12" intermediate
	INTERRIOR PANELING		
41.	¼"	4d casing (1 1/2" x0.080")	6" edge , 12" intermediate
42.	3/8"	6d casing (2" x0.099")	6" edge , 12" intermediate

a. Nails spaced at 6 inches at intermediate supports where spans are 48" or more. For nailing of wood structural panel and particleboard diaphragms and shear walls, refer to Section 2305.

SHEARWALL SCHEDULE

MARK	MATERIAL	NO. OF SIDES	NAILING EDGE (E.N.)	NAILING FIELD (F.N.)	LTP4 SHEAR CLIPS	SILL PLATE ATTACHMENT U.N.O. FRAMED FLOOR (6)(8)(9)	FOUNDATION (A307 BOLTS) 7" LONG 5/8"ø (5)(6) EXT.	INT.	ALLOW SHEAR (#/1)	REMARKS
1	15/32" STRUCT-I PLYWD (PI 32/16) 5-PLY	1	10d @ 6" O.C.	10d @ 12" O.C.	16" O.C.	SIMPSON SDS @ 9" O.C.	24"	32"	340	(3)(4)
2	15/32" STRUCT-I PLYWD (PI 32/16) 5-PLY	1	10d @ 4" O.C.	10d @ 12" O.C.	10" O.C.	SIMPSON SDS @ 6" O.C.	16"	32"	510	(1)(2)(3)(4)(7)
3	15/32" STRUCT-I PLYWD (PI 32/16) 5-PLY	1	10d @ 3" O.C.	10d @ 12" O.C.	8" O.C.	SIMPSON SDS @ 4" O.C.	8" (11)	16"	665	(1)(2)(3)(4)(7)(11)
4	15/32" STRUCT-I PLYWD (PI 32/16) 5-PLY	1	10d @ 2" O.C.	10d @ 12" O.C.	6" O.C.	SIMPSON SDS @ 3" O.C.	8" (11)	16"	870	(1)(2)(3)(4)(7)(11)
5	HFX-24x9					1 1/8"ø STD BOLT			2,900	SEE HFX1,HFX2
6	HFX-18x11					1 1/8"ø STD BOLT			1,980	SEE HFX1 & HFX2
7	HFX-21x14					1 1/8"ø H.S BOLT			2,150	SEE HFX1 & HFX2

NOTES:

FOR SHEARWALL 2,3 & 4

1. FRAMING AT ADJOINING PANEL EDGES SHALL BE 3" (INCH) NOMINAL OR THICKER (i.e.) MIN 3x VERTICAL STUDS AND BLOCKING) AND SILL PLATE SHAL BE 3x. NAILS SHALL BE STAGGERED IN TWO LINES ALONG PANEL EDGES WHERE NAILS ARE SPACED 2" INCHES ON CENTER OR WHEN 10d COMMON NAILS SPACED 3" O.C. PENETRATE FRAMING MORE THAN 1 5/8".
2. WHERE PLYWOOD APPLIES ON BOTH FACES OF A WALL AND NAIL SPACING IS LESS THAN 6" INCHES ON CENTER ON EITHER SIDE. PANEL JOINTS SHALL HAVE MIN 3x (VERTICAL STUDS AND BLOCKING) AND NAILS SHALL BE STAGGERED. OFFSET PANEL JOINTS TO FALL ON DIFFERENT FRAMING MEMBER WHERE PLYWOOD IS PLACED AT BOTH FACES.
3. NAILS SHALL BE PLACED NOT LESS THAN 1/2 INCH FROM PANEL EDGES.
4. FOR HOLD-DOWNS AT THE END OF THE SHEAR WALL, SEE PLANS AND SCHEDULE. PROVIDE PLATE WASHER PER STANDARD PLATE WASHER SCHEDULE AT 12/ST-2 ALL SILL PLATE ANCHOR BOLTS AND AT ALL HOLDOWN BOLTS CONNECTED TO VERTICAL POSTS.
5. USE WELDED STUD BOLTS OF SAME SIZE & SPACING WHERE STEEL BEAM OCCURS UNDER SHEAR WALL.
6. WHERE PLYWOOD APPLIED ON BOTH FACES, REDUCE SCREWS, LTP4 AND ANCHOR BOLT, SPACING BY HALF AS NOTED W/ MIN. SPACING 2" O/C. PROVIDE A35 ONE SIDE & LTP4 ON OTHER SIDE.
7. AT FOUNDATION SILL PLATE SHALL BE MIN 3x
8. SIMPSON SDS 1/4"x6" WOOD SCREWS 1/2"x6" LAG SCREWS MAY BE SUBSTITUTED FOR EACH SIMPSON SDS 1/2"x6" WOOD SCREWS
9. WHERE 2-2xSILL PLATES ARE USED, SCREW LOWER PLATE TO FRAMING BELOW, DRILL HOLE IN UPPER SILL PL. FOR SCREW HEAD SO THAT UPPER PLATE SITS FLAT ON LOW SILL PLATE.
10. USE A35F OUTSIDE @ 12" O.C. & A35 @ 12" O.C. INSIDE, STAGGERED.
11. INCREASE WIDTH OF FOOTING SO THAT EDGE DISTANCE IS 4"

GENERAL

1. ALL CONSTRUCTION AND WORKMANSHIP SHALL CONFORM TO THE 2016 CALIFORNIA BUILDING CODE.
2. CONTRACTOR MUST CHECK ALL DIMENSIONS. FRAMING CONDITIONS, AND SITE CONDITIONS BEFORE STARTING WORK ARCHITECT/ENGINEER SHALL BE NOTIFIED IMMEDIATELY OF AND DISCREPANCIES OR POSSIBLE DEFICIENCIES.
3. ALL DIMENSIONS TO TAKE PRECEDENCE OVER WALE SHOWN ON PLANS, SECTIONS AND DETAILS.
4. MATERIAL NOTES AND SPECIFICATIONS ON DRAWINGS SHALL TAKE PRECEDENCE OVER THE SPECIFICATIONS.
5. THE CONTRACT STRUCTURAL DRAWINGS AND SPECIFICATIONS REPRESENT THE FINISHED STRUCTURE, UNLESS OTHERWISE INDICATED THEY DO NOTE INDICATE THE METHODS OF CONSTRUCTION. THE CONTRACTOR SHALL PROVIDE ALL MEASURES NECESSARY TO PROTECT THE STRUCTURE DURING CONSTRUCTION SUCH MEASURES SHALL INCLUDE BUT NOT BE LIMITED TO BRACING, SHORING OF LOADS DUE TO CONSTRUCTION EQUIPMENT, ETC. OBSERVATION RESISTS TO THE SITE BY THE STRUCTURAL ENGINEER SHALL NOT INCLUDE THE INSPECTION OF THE ABOVE ITEMS.
6. OPENINGS, POCKETS, ETC. SHALL NOT BE PLACED IN SLABS. DECKS, BEAMS. JOISTS, COLUMNS, WALLS, ETC., UNLESS SPECIFICALLY DETAILED ON THE STRUCTURAL DRAWINGS. NOTIFY THE STRUCTURAL ENGINEER WHEN DRAWINGS BY OTHERS SHOW OPENINGS, POCKETS, ETC. BUT NOT LIKEWISE SHOWN ON THE STRUCTURAL DRAWINGS. HOLES 3" ROUND OR SQUARE MAXIMUM SPACED 4 24' O.C. MINIMUM IN A FLOOR SLAB, ROOF SLAB OR WALL SHALL BE EXEMPT FROM THIS REQUIREMENT.
7. ALL ASTM SPECIFICATIONS NOTED ON THESE DRAWINGS SHALL BE OF THE LATEST REVISION.
8. EQUIPMENT MATERIALS SUBSTITUTED AS PER "APPROVED EQUAL" NOTE SHALL BE APPROVED BY THE LOCAL BUILDING DEPARTMENT AND THE STRUCTURAL ENGINEER.
9. CONTRACTOR SHALL INVESTIGATE SITE DURING CLEARING AND EARTHWORK OPERATION FOR FILLED EXCAVATIONS OR BURIED STRUCTURES SUCH AS CESSPOOLS, CISTERNS, FOUNDATIONS, ETC. IF SUCH STRUCTURES ARE FOUND, STRUCTURAL ENGINEER SHALL BE NOTIFIED.
10. ALL TESTING AND INSPECTION REQUIRED FOR THE PROJECT IS TO BE PAID FOR BY THE OWNER UNLESS OTHERWISE SPECIFIED

STRUCTURAL OBSERVATION

1. PROVIDE STRUCTURAL OBSERVATION AS PER CBC CHAPTER 17, SPECIFIED ON SHEET SN-2
   * AFTER PLACEMENT OF REINFORCEMENT FOR FOOTING.
   * AFTER ALL SHEAR WALL & FLOOR NAILING IS COMPLETE.

SPECIAL INSPECTION

1. PROVIDE SPECIAL INSPECTION AS PER CBC CHAPTER 17, SPECIFIED ON SHEET SN-2
2. APPROVAL BY THE INSPECTOR DOES NOT MEAN APPROVAL OF FAILURE TO COMPLY WITH THE PLANS OR SPECIFICATIONS. ANY DETAIL WHICH FAILS TO BE CLEAR OR IS AMBIGUOUS MUST BE REFERRED TO THE ENGINEER FOR INTERPRETATION OR CLARIFICATION.

FOUNDATIONS

1. FOOTINGS ARE TO BE CARRIED A MINIMUM OF 24" FOR LIGHT STRUCTURES INTO FIRM UNDISTURBED NATURAL SOIL OR APPROVED COMPACTED FILL.
2. DESIGN BEARING PRESSURE IS 2,000 PSF FOR CONVENTIONAL FOOTINGS WITH A 33% INCREASE FOR SEISMIC OR WIND LOADING PER SOILS REPORT BY: WILLDAN GEOTECHNICAL, INC. DATED DECEMBER 19, 2019 JOB NO. 109673
3. RELATIVELY NON-EXPANSIVE FILL SHOULD BE USED IN BACK FILLING BEHIND WALLS. ALL RETAINING WALLS SHALL BE ADEQUATELY SHORED DURING THE BACKFILL OPERATION.
4. CONTRACTOR TO PROVIDE FOR DE-WATERING OF EXCAVATIONS FROM EITHER SURFACE WATER. GROUND WATER, OR SEEPAGE. NO GROUND WATER IS ANTICIPATED IN EXCAVATIONS.
5. CONTRACTOR SHALL PROVIDE AND INSTALL ALL CRIBBING, SHEATHING AND SHORING REQUIRED TO SAFELY RETAIN THE EARTH BANKS.
6. EXCAVATION FOR FOOTINGS SHALL BE APPROVED BY THE SOIL ENGINEER PRIOR TO PLACING THE CONCRETE AND REINFORCING. CONTRACTOR TO NOTIFY FOUNDATION ENGINEER WHEN INSPECTION OF EXCAVATION IS READY, FOUNDATION ENGINEER BE PAID FOR BY THE OWNER.
7. CONTRACTOR SHALL PROTECT ALL UTILITY LINES. ETC.. ENCOUNTERED DURING EXCAVATION AND BACKBITING.
8. ALL EXCAVATIONS SHALL BE PROPERLY BACKFILLED. DO NOT BACKFILL BEHIND RETAINING WALLS BEFORE CONCRETE HAS ATTAINED FULL DESIGN STRENGTH, CONTRACTOR TO BRACE OR PROTECT FROM LATERAL LOADS ALL BUILDING AND PIT WALLS BELOW GRADE UNTIL ATTACHED FLOORS ARE COMPLETELY IN PLACE AND HAVE ATTAINED FULL STRENGTH.
9. BOTTOM OF FOOTINGS SHALL BE PLACED A MINIMUM OF 24" BELOW EXISTING GRADE. USE STEP FOOTINGS WERE REQUIRED.
10. FOOTING BACKFILL AND UTILITY TRENCH BACKFILLED WITHIN BUILDING AREA SHALL BE MECHANICALLY COMPACTED IN LAYERS, TO THE APPROVAL OF THE FOUNDATION ENGINEER. FLOODING WILL NOT BE PERMITTED.
11. ANY EXISTING FOUNDATIONS ON SITE THAT INTERFERE WITH NEW FOUNDATIONS SHOULD BE REMOVED, ALL NEW FOOTINGS MUST EXTEND INTO UNDISTURBED SOILS WHERE THIS CONDITION OCCURS OR COMPACTED BACKFILL.

CONCRETE

1. CONCRETE SHALL ATTAIN A MINIMUM ULTIMATE COMPRESSIVE STRENGTH OF 3,000 PSI AT 28 DAYS FOR FOOTINGS & GRADE BEAM: W/C RATIO 0.45
2. AGGREGATES SHALL BE NATURAL SAND AND ROCK CONFORMING TO ASTM C33.
3. THE MAXIMUM SIZE AGGREGATE IN CONCRETE WORK SHALL BE 1-1/2" FOR FOUNDATIONS AND MASS CONCRETE AND 3/4" FOR COLUMNS, BEAMS, WALLS AND SLABS.
4. CEMENT SHALL BE PORTLAND CEMENT CONFORMING TO ASTM C-150, TYPE I LOW ALKALI.
5. WATER SHALL BE CLEAN AND FREE OF DELETERIOUS AMOUNT OF ACID, ASH OR ORGANIC MATERIALS.
6. CONCRETE MIXING SHALL CONFORM TO ASTM C-94.
7. SLUMPS: THE MAXIMUM SLUMP SHALL NOT EXCEED FOUR INCHES FOR FOOTINGS, SLAB ON EARTH, AND MASS CONCRETE, AND FIVE INCHES FOR OTHER CONCRETE. IF THE AIR TEMPERATURE IS ABOVE 80 DEG F, A MAXIMUM OF SIX INCHES SLUMP IS PERMISSIBLE, PROVIDED THE MIX DESIGN IS REVISED ACCORDINGLY BY THE TESTING LABORATORY, MEASURE SLUMP IN ACCORDANCE WITH METHOD OF TEST FOR SLUMP OF PORTLAND CEMENT CONCRETE ASTM C-143.
8. THE FOLLOWING MINIMUM CLEAR DISTANCES BETWEEN REINFORCING STEEL AND FACE OF CONCRETE SHALL BE MAINTAINED UNLESS NOTED OTHERWISE:
   a. SLAB ON GRADE AT CENTER OF SLAB.
   b. 1 1/2" FOR FORMED CONCRETE BELOW GRADE.
   c. 3" FOR UNFORMED CONCRETE POURED AGAINST EARTH.
   d. 2" FOR CONCRETE EXPOSED TO WEATHER.
9. PROVIDE 3/4" CHAMFERS AT ALL EXPOSED CORNERS
10. ALL REINFORCING BARS, ANCHOR BOLTS AND OTHER CONCRETE INSERTS SHALL BE WELL SECURED IN POSITION PRIOR TO PLACING CONCRETE.
11. REFER TO ARCHITECTURAL DRAWINGS FOR MOLDS, GROOVES, ORNAMENTS CLIP OR GROUNDS REQUIRED TO BE CAST INTO THE CONCRETE AND FOR EXTENT OF DEPRESSIONS, CURBS, RAMPS, ETC.
12. NO SLEEVES OR CHASES SHALL BE LACED IN THE BEAMS, SLABS, OR WALLS, EXCEPT THOSE SHOWN ON THE PLANS.
13. HANGER INSERTS IN CONCRETE SLABS SHALL BE PLACED SO THAT 3/4" CONCRETE COVERAGE OCCURS BETWEEN INSERTS AND TOP OF SLAB.
14. DOWELS BETWEEN FOOTINGS AND COLUMNS SHALL BE THE SAME GRADE, SIZE, AND SPACING AS THE VERTICAL COLUMN.
15. CURING COMPOUNDS USED ON CONCRETE THAT IS TO RECEIVE A RESILIENT TILE FINISH SHALL BE APPROVED BY A REPRESENTATIVE OF THE TILE MANUFACTURER BEFORE USE.

REINFORCING STEEL

1. REINFORCING STEEL SHALL CONFORM TO ASTM A615, GRADE 40 FOR SIZES #3, AND GRADE 60 FOR SIZES #4 AND LARGER.
2. WELDED FABRIC (MESH) SHALL CONFORM TO THE LATEST REVISED ASTM A185. SMOOTH WIRE FABRIC SHALL CONFORM TO ASTM A85, YIELD STRENGTH 60 KSI.
3. ALL BARS IN MASONRY SHALL BE LAPPED A MINIMUM OF 40 BAR DIAMETERS (24" MIN.) AT ALL SPLICES U.N.O.
4. SPLICES OF HORIZONTAL REBAR IN WALLS AND FOOTINGS SHALL BE STAGGERED 48" MINIMUM.
5 ALL BENDING OF REINFORCING STEEL SHALL CONFORM TO THE LATEST EDITION OF THE UNIFORM BUILDING CODE AND ACI MANUAL OF STANDARD PRACTICE.
6. MINIMUM LAP OF MESH SHALL BE SIX INCHES OR ONE FULL MESH
7. BARS MAY BE IN CONTACT WHEN FORMING A LAPPED SPLICE.
8. FOR BEAMS AND SLABS, THE MINIMUM CLEAR DISTANCE BETWEEN PARALLEL BARS SHALL BE THE DIAMETER OF THE BAR, 1-1/3 TIMES THE AGGREGATE SIZE, BUT IN NO CASE LESS THAN ONE INCH FOR COLUMNS THE MINIMUM CLEAR DISTANCE BETWEEN BARS SHALL BE 1-1/2 BAR DIAMETERS BUT IN NO CASE LESS THAN 1-1/2 INCHES.

WOOD FRAMING

1. ALL LUMBER SHALL CONFORM TO "STANDARD GRADING AND DRESSING RULES NO. 16 OF WEST COAST LUMBER INSPECTION BUREAU". EACH PIECE SHALL BEAR THE GRADE STAMP OF AN APPROVED GRADING AGENCY, EXCEPT EXPOSED LUMBER SHALL BEAR NO MOLDINGS WHICH WILL BE VISIBLE AFTER INSTALLATION. WOOD STRUCTURAL PANELS SHALL COMPLY CBC 23-2 (PS 1-07) OR CBC 23-3 (PSI 2-04).
2. FRAMING LUMBER SHALL BE DOUGLAS FIR, S4S, U.N.O. THE FOLLOWING GRADES SHALL BE THE MINIMUM ACCEPTABLE GRADES, U.N.O.
   a) JOIST = D.F.# 2 OR BETTER b) BEAMS AND POST = D.F#1 OR BETTER – PS 20-05
   c) STUDS. BLOCKING, PLATES (DOUGLAS FIR OR HEM FIR) STUD GRADE
3. ALL WOOD BEARING ON CONCRETE OR MASONRY SHALL BE PRESSURE TREATED FIR.
4. NAILS SHALL BE GALV. BOX. OR COMMON NAILS. NAILING SHALL BE PER CHAPTER 23 OF THE CALIFORNIA BUILDING CODE U.N.O. ON THE PLANS OR DETAILS.
5. ALL METAL CONNECTORS SHALL BE SIMPSON STRONG – TIE CONNECTORS. THE NAILS FOR THESE CONNECTORS SHALL BE JOIST HANGER NAILS AS MANUFACTURED BY THE SIMPSON CO.
6. BOLT HOLES IN WOOD SHALL BE 1/32" TO 1/16" LARGER THAN THE NOMINAL BOLT DIAMETER. ALL BOLTS SHALL HAVE STANDARD CUT WASHER UNDER HEAD AND NUT UNLESS NOTED OTHERWISE.
7. ALL BOLTS SHALL BE RETIGHTENED PRIOR TO THE APPLICATION OF SHEATHING, PLASTER, ETC.
8. PROVIDE 2X SOLID BLOCKING BETWEEN JOISTS AND RAFTERS AT ALL SUPPORTS. BLOCKING SHALL BE ONE PIECE AND THE FULL DEPTH OF THE JOIST OR RAFTER.
9. PARALLAM (PSL) PER TRUSS JOIST MaCMILLAN SPECIFICATION: Fb=2,900 psi Fu=290 psi E=2,000 ksi
10. ALL BOLTS THRU WOOD SHALL HAVE STANDARD WASHERS EXCEPT WHERE METAL SIDE PLATES ARE SPECIFIED. BOLT HOLES SHALL BE NOT MORE THAN 1/16" LARGER THAN THE BOLT DIAMETER U.N.O.
11. ALL GLUE-LAMINATED MEMBERS AS SHOWN ON PLANS SHALL BE IN ACCORDANCE WITH A.I.T.C. SPECIFICATIONS. ADHESIVES SHALL BE WATER-RESISTANT INTERIOR W.C.I.A- SPECIFICATIONS COMBINATION (SEE BELOW) INDUSTRIAL APPEARANCE GRADE. A.I.T.C. INSPECTION CERTIFICATES SHALL BE FURNISHED WITH EACH BEAM. SIMPLE SPAN BEAMS 24F-V4, CANTILEVER BEAMS 24F-V8
12. PROVIDE SOLID BLOCKING (BRIDGING) AT INTERVAL NOT EXCEEDING 8'-0" FOR 2x12 JOISTS.
13. PROVIDE 4x(WIDTH OF WALL) MIN. POST UNDER EACH END OF THE BEAM U.N.O.
14. JOISTS OR RAFTERS FRAMING FROM OPPOSITE SIDES OF BEAMS OR WALLS SHALL HAVE A LAP OF 4" OR MORE AND BE SPLICED WITH 4-16D NAILS, UNLESS NOTED OTHERWISE.
15. PARALLAM BEAMS SHALL BE MANUFACTURED BY "TRUS JOIST MacMILLAN" TJM (COLA R.R. #22614 AND #24878)., OR EQUAL. PROVIDE CAMBER WHERE INDICATED ON DRAWINGS. ALL OPEN WEB JOIST, TJI, PSL AND CONNECTIONS INCLUDING BUT NOT LIMITED TO HANGERS SHALL BE DESIGNED AND PROVIDED BY TJM OR EQUAL SUBMIT SHOP DRAWINGS AND STRUCTURAL CALCULATIONS SIGNED BY THE REGISTERED STRUCTURAL ENGINEER LICENSED IN THE STATE OF CALIFORNIA TO OWNER'S REPRESENTATIVE FOR REVIEW.

MASONRY NOTES

1. BLOCK MASONRY UNITS SHALL BE GRADE N-1, HOLLOW LOAD BEARING, NORMAL WEIGHT UNITS CONFORMING TO ASTM C-90 LATEST REVISIONS AND IN ADDITION, SHALL HAVE A MAXIMUM SHRINKAGE OF .06% FROM THE SATURATED TO OVEN-DRY CONDITION.
2. MORTAR SHALL BE FRESHLY PREPARED AND UNIFORMLY MIXED AS PER ASTM C270, TYPE M, AVERAGE COMPRESSIVE STRENGTH 2,500 PSI, WATER RENTENTION 75%, AIR CONTENT 12% MAXIMUM.
3 . GROUT SHALL BE AS PER ASTM C476. THE PROPORTION OF GROUT SHALL BE AS PER ASTM C476.
4. MORTAR & GROUT SHALL HAVE A MINIMUM COMPRESSIVE STRENGTH 2000 PSI AT 28 DAYS. NET AREA COMPRESSIVE STRENGTH OF THE MASONARY SHALL BE 1,500 PSI AS SAMPLED AND TESTED PER ASTM C140.
5. SEE " REINFORCING STEEL SECTION OF SPECIFICATIONS FOR ASTM SPECIFICATION OF REINFORCING STEEL.
6. MINIMUM LAP OF REINFORCING STEEL SHALL BE 40 BAR DIAMETERS OR 2'-0' MINIMUM. PROVIDE 1/4" MINIMUM CLEARANCE FOR BLOCK MASONRY CELLS.
7. MAXIMUM HEIGHT OF GROUT POUR SHALL BE 4'-0" UNLESS CLEAN OUT OPENINGS ARE PROVIDED AT THE BOTTOM OF CELLS TO BE FILLED.
8. MINIMUM GROUTING: FILL ALL CELLS, CONTAINING REINFORCING STEEL.
9. NO COLD JOINTS ARE PERMITTED UNLESS SPECIFICALLY DETAILED.
10. ALL GROUT SHALL HAVE WATER-REDUCING ADMIXTURE APPROVED BY THE ENGINEER ADDED PER MANUFACTURER'S SPECIFICATIONS.
II. VERTICAL CELLS TO BE FILLED SHALL HAVE VERTICAL ALIGNMENT. AN OVER HANGING MORTAR OR OTHER OBSTRUCTION OR DEBRIS SHALL BE REMOVED FORM THE INSIDES OF SUCH CELL WALLS.
12. CONTINUOUS INSPECTION IS REQUIRED FOR ALL MASONRY AND EPOXY ANCHORS.

STRUCTURAL STEEL

1. ALL STRUCTURAL STEEL SHALL BE SUPPLIED BY A FABRICATOR APPROVED AND CERTIFIED BY THE LOCAL BUILDING OFFICIAL.
2. STRUCTURAL STEEL SHALL CONFORM TO ASTM A-992 UNLESS SPECIFICALLY NOTED OTHERWISE. PIPE COLUMNS SHALL CONFORM TO ASTM A-53 (UNO) STEEL TUBES SHALL CONFORM TO ASTM A-500 (UNO).
3. ALL WELDING SHALL BE CERTIFIED AND LICENSED BY THE LOCAL BUILDING OFFICIAL.
4. ALL STEEL SHALL BE PRIMED WITH ONE COAT OF LEAD RUST-INHIBITIVE PRIMER AFTER ALL SHOP FABRICATION AND WELDING, TOUCH UP AFTER FIELD ERECTION AND FIELD WELDING.
5. DETAILING AND FABRICATION SHALL BE IN ACCORDANCE WITH AISC LATEST EDITION.

STRUCTURAL WELDING

1. ALL WELDING SHALL BE IN STRICT CONFORMANCE WITH AWS D1.1-94.
2. NOT USED
3. THE CONTRACTOR SHALL PROVIDE WELDING PROCEDURE SPECIFICATION (WPS) FOR REVIEW AND APPROVAL PRIOR TO STARTING OF FABRICATION. THE SEQUENCE OF WELDING SHALL BE PLANNED TO MINIMIZE LOCKED IN STRESSES AND DISTORTION.
4. COMPLETE JOINT PENETRATION GROOVE WELDS SHOULD HAVE A FILLER METAL WITH A NOTCH TOUGHNESS OF 20 FT/LBS AVERAGE AT ZERO DEGREES FAHRENHEIT.
5. WELDING OF STRUCTURAL STEEL SHALL BE BY MANUAL SHIELD METAL ARC OR SUBMERGED ARC PROCESS USING E70XX ELECTRODES.
6. LENGTHS OF WELDS ARE EFFECTIVE LENGTHS AS SPECIFIED IN THE UNIFORM BUILDING CODE. WHERE LENGTH OF WELD IS NOT SHOWN IT SHALL BE FULL LENGTH OF JOINT. ALL BUTT WELDS SHALL BE FULL PENETRATION UNLESS NOTES OTHERWISE.
7. ALL SHOP WELDS SHALL BE CERTIFIED BY A CITY OF LOS ANGELES APPROVED FABRICATOR.
8. WELDERS SHALL BE QUALIFIED FOR THE WORK THEY WILL BE DOING AND SHALL HAVE CERTIFICATIONS CURRENT.
9. FACES OF FILLET WELDS EXPOSED TO VIEW SHALL HAVE AS-WELDED SURFACES THAT ARE REASONABLY SMOOTH AND UNIFORM. NO FINISHING OR GRINDING SHALL BE REQUIRED, EXCEPT WHERE CLEARANCES OR FIT OF OTHER ITEMS MAY SO NECESSITATE.
10. ALL PARTIAL AND FULL PENETRATION WELDS WHICH ARE EXPOSED TO VIEW SHALL BE GROUND SMOOTH AND FLUSH WITH FINISH SURFACE OF STEEL. HOLES SHALL BE FILLED WITH WELD METAL OR BODY SOLDER AND SMOOTHED BY GRINDING OR FILING.
11. CLEAN GROOVE PREPARATION THERMAL CUTS BY GRINDING.
12. WELDS SHALL BE TERMINATED AT THE END OF A JOINT IN A MANNER THAT WILL ENSURE SOUND WELDS. WHENEVER NECESSARY THIS SHALL BE DONE BY USE OF EXTENSION BARS AND RUN OFF TABS. RUN OFF TABS USED AT BEAM FLANGE CONNECTION SHALL BE REMOVED AND THE WELDS FINISHED TO A SMOOTH CONTOUR (1" RADIUS). NO WELD DAMS ARE ALLOWED.
13. AFTER FULL PENETRATION WELDING, THE BACKING BAR IS TO BE REMOVED, THE WELD ROOT INSPECTED AND TESTED FOR IMPERFECTIONS,WHICH IF FOUND, ARE TO BE REMOVED BY BACKGOUGING TO SOUND MATERIAL. THE BACKGOUGED AREA IS TO BE WELDED AND A FILLET WELD SHALL BE APPLIED TO REINFORCE THE JOINT. THE SIZE OF THE REINFORCING FILLET WELD SHALL BE EQUAL TO 1/4 THE PLATE THICKNESS, BUT NOT LESS THAN 1/4" NOR MORE THAN 3/8".

GLUED LAMINATED TIMBER

1. GLUED LAMINATED BEAMS SHALL BE DOUGLAS FIR-LARCH CONFORMING TO COMBINATION 24F OF THE LATEST AITC 117 SPECIFICATIONS FOR STRUCTURAL GLUED LAMINATED TIMBER AND SHALL BEAR AN AITC STAMP. BEAMS SHALL ALSO CONFORM TO THE LATEST U.B.C. STANDARD NO. 25-10 AND 25-11.
2. THE FABRICATOR SHALL FURNISH A CERTIFICATE OF CONTINUOUS INSPECTION BY AN APPROVED TESTING AGENCY STATING THAT BEAMS WERE PRODUCED IN ACCORDANCE WITH THE LATEST AITC 117 SPECIFICATIONS AND THE LATEST PRODUCT STANDARD PS-56. THE FABRICATOR SHALL SUBMIT COMPLETE SHOP DRAWINGS TO THE ENGINEER FOR APPROVAL PRIOR TO FABRICATION.
3. BEAMS TO BE CAMBERED AS SHOWN ON THE PLANS, CAMBER SHALL BE ZERO WHEN IT IS NOT SPECIFIED.
4. STRESS REQUIREMENTS SHALL BE AS FOLLOWS :
   (COMBINATION 24F-V8 FOR CANTILEVER AND CONTINUOUS BEAMS, COMBINATION 24F-V4 FOR OTHERS)
   FB = 2400 PSI (MIN.)
   FV = 165 PSI (MIN.)
   FC = 650 PSI (MIN., PERPENDICULAR TO GRAIN)
   E = 1800000 PSI (MIN.)
5. GLU-LAM BEAMS ARE FOR DRY CONDITION USE, WITH A MAXIMUM MOISTURE CONTENT OF 12%, UNLESS NOTED OTHERWISE.
6. LAMINATION TO BE 1 1/2", U.N.O.
7. CUTTING, NOTCHING OR DRILLING OF GLU-LAM BEAMS SHALL REQUIRE THE APPROVAL OF THE ENGINEER.
8. ALL GLU-LAM MEMBERS EXPOSED TO WEATHER SHALL BE PROTECTED WITH AN APPROVED PRESERVATIVE.
9. AN ATTIC CERTIFICATION OF INSPECTION FOR ALL GLUED LAMINATED TIMBER SHALL BE INSPECTED TO A BUILDING AND SAFETY INSPECTOR PRIOR TO ERECTION.

FOR STRUCTURAL OBSERVATION & SPECIAL INSPECTION SEE SHEET SN-2

DESIGN CRITERIA

1. BUILDING SHALL COMPLY WITH THE 2016 EDITION OF THE CALIFORNIA BUILDING CODE. (CABC)
2. VERTICAL LIVE LOADS (WITH CODE ALLOWABLE AREA REDUCTION U.N.O.)
   ROOF: L.L. = 20 psf
3. LATERAL LOADS:
   WIND: AS PER 2016 CALIFORNIA BUILDING CODE.
   BASIC WIND SPEED: 110 MPH
   EXPOSURE TYPE:: TYPE C BASIC WIND LOAD = 26.78 PSF
   IMPORTANCE FACTOR: 1=1.0
   SEISMIC: AS PER 2016 CALIFORNIA BUILDING CODE.
   Ss=1.603 g SDS=1.069 g
   Si= 0.589 g SD1=0.589 g
   BASIC SEISMIC-FORCE RESISTING SYSTEM: BEARING WALL, SPECIAL REINFORCED MASONRY SHEAR WALL Cs = 0.2137 W
   SITE CLASSIFICATION: D OMEGA = 3.3 (FLEXIBLE DIAPHGRAM)
   SEISMIC CATEGORY: E RISK CATEGORY: II
   R = 5.0
   REDUNDACY = 1
   ANALYSIS PROCEDURE: EQUIVALENT LATERAL FORCE PROCEDURE

SHEET INDEX

SN-1 GENERAL NOTES & SHEAR WALL SCHEDULE
SN-2 SPECIAL INSPECTION & OBSERVATION NOTES
ST-1 TYPICAL CONCRETE DETAILS
ST-2 TYPICAL WOOD DETAILS
S-1.0 FOUNDATION PLAN
S-2.0 ROOF FRAMING PLAN
SD-1 DETAILS

Landscape Architect:

DVD
David Volz Design
Landscape Architecture & Park Planning

Costa Mesa Office:
151 Kalmus Drive, Suite M8
Costa Mesa, CA 92626
Phone: (714) 641-1300
Fax: (714) 641-1323

e-mail: drawings@dvolzdesign.com
www.dvolzdesign.com

Subconsultant:

SKA
STRUCTURAL ENGINEERS
Shehzad Khaliq & Assoc., Inc.
3456 Golden Poppy Way
Yorba Linda, Ca. 92886
Phone 714 572-0172
FAX 714 985-4758
Email: skhaliq@skaengrs.com

Seal:

REGISTERED PROFESSIONAL ENGINEER — No. 4390 — Exp. 6-30-23 — STRUCTURAL — STATE OF CALIFORNIA

811 DIGALERT
UNDERGROUND SERVICE ALERT OF SOUTHERN CALIFORNIA

Revisions:

No.	Date	Revisions	By

Project : JACK HAMMETT SPORTS COMPLEX
LANDSCAPE, PARKING LOT EXPANSION & BUILDING IMPROVEMENTS
2750 FAIRVIEW ROAD

Owner: City of Costa Mesa

Project No :
Drawn By : RRR
Checked By : SK
Date : June 30, 2019
Scale : NOTED

Drawing Title : GENERAL NOTES

Drawing No : SN.1

CONTRACTOR RESPONSIBILITY:

CONTRACTOR RESPONSIBLE FOR THE CONSTRUCTION OF WIND & SEISMIC FORCE RESISTING SYSTEM, COMPONENT LISTED IN "STATEMENT OF SPECIAL INSPECTION" SHALL SUBMIT A WRITTEN STATEMENT OF RESPONSIBILITY TO THE LADBS INSPECTOR AND THE OWNER PRIOR TO COMMENCEMENT OF WORK ON SUCH SYSTEM OR COMPONENT "PER SECTION 1706-1".

SPECIAL INSPECTION REQUIREMENTS (TABLE 1)

WORK REQUIRING SPECIAL INSPECTION AND STRUCTURAL OBSERVATION DURING: (TO BE SELECTED AND CHECKED BY THE DESIGN PROFESSIONAL OF RECORD)		SPECIAL INSPECTION		
		CONTINUOUS	PERIODIC	
GRADING & FOUNDATION	A PLACEMENT OF COMPACTED FILL, GRADING, AND EXCAVATIONS			
WOOD CONSTRUCTION	A PLACEMENT AND NAILING OF SHEATHING WHERE SPACING IS< 4". SEE NOTE b		X	
	B DRAG CONECTIONS AND HOLD-DOWNS.		–	
	C SEISMIC TIMBER CONNECTIONS.		–	
	C HARDY PANEL		–	
MASONARY COMPONENTS	REINFORCEMENT AND MORTAR JOINTS		X	
	REINFORCEMENT AND MORTAR JOINTS	X		

b. SPECIAL INSPECTOR SHALL VERIFY STRUCTURAL PANEL SHEATHING, NOMINAL SIZE OF FRAMING MEMBER AT ADJOINING EDGES.

REQUIRED VERIFICATION & INSPECTION OF STEEL CONSTRUCTION (X=INCLUDING STRUCTURAL STEEL)

VERIFICATION & INSPECTION	CONTINUOUS	PERIODIC	REFERENCED STANDARD	IBC REFERENCE
1. MATERIAL VERIFICATION OF HIGH STRENGTH BOLTS, NUTS & WASHERS:				
a. IDENTIFICATION MARKINGS TO CONFORM TO ASTM STANDARDS SPECIFIED IN THE APPROVED CONSTRUCTION DOCUMENTS.	–	X	ASTM MATERIAL SPECIFICATIONS, AISC 360	–
2. INSPECTION OF HIGH STRENGTH BOLTING:				
a. BEARING TYPE CONNECTIONS	–	–	AISC 360, SECTION N TABLE N5 6-1, 6-2, 6-3	–
b. SLIP CRITICAL CONNECTIONS	–	–		
3. MATERIAL VERIFICATION OF STRUCTURAL STEEL:				
a. IDENTIFICATION MARKING TO CONFORM TO ASTM STANDARDS SPECIFIED IN THE APPROVED CONSTRUCTION DOCUMENTS	–	–	AISC 360 SECTION N	1708.4
b. MANUFACTURERS' CERTIFIED MILL TEST REPORTS.	–	–	ASTM A6 OR ASTM A 568	
4. MATERIAL VERIFICATION OF WELD FILLER MATERIALS:				
a. IDENTIFICATION MARKING TO CONFORM TO AWS SPECIFICATION IN THE APPROVED CONSTRUCTION DOCUMENTS	–	–	AISC 360, SECTION N	–
b. MANUFACTURER'S CERTIFICATION OF COMPLIANCE REQUIRTED	–	–	–	–
5. INSPECTION OF WELDING:	–	–		
a. STRUCTURAL STEEL:				
1) COMPLETE & PARTIAL PENETRATION GROOVE WELDS	–	–	AWS D1.1 AISC SECTION N TABLE N 5 4-1, 4-2, 4-3	1704.3.1
2) MULTIPASS FILLET WELDS.	–	–		
3) SINGLE PASS FILLET WELDS > 5/16"	–	–		
4) SINGLE PASS FILLET WELDS ≤ 5/16"	–	–		
5) FLOOR AND ROOF DECK WELDS	–	–	AWS D1.3	–
b. REINFORCING STEEL:	–	–	AWS D1.4 ACI 318:3.5.2	–
1) VERIFICATION OF WELDABILITY OF REINFORCING STEEL. OTHER THAN ASTM A 706	–	X		
2) REINFORCING STEEL RESISTING FLEXURAL & AXIAL FORCES IN INTERMEDIATE & SPECIAL MOMENT FRAMES, & BOUNDARY ELEMENTS OF SPECIAL REINFORCED CONCRETE SHEAR WALLS AND SHEAR REINFORCEMENT	–	–		
3) SHEAR REINFORCEMENT	–	–		
4) OTHER REINFORCING STEEL	–	X		

REQUIRED VERIFICATION & INSPECTION OF CONCRETE CONSTRUCTION (TABLE 1705-3)

VERIFICATION & INSPECTION	CONTINUOUS	PERIODIC	REFERENCED STANDARD	IBC REFERENCE
1. INSPECTION OF REINFORCING STEEL, INCLUIDING PRESTESSING TENDONS AND PLACEMENT	–	X	ACI 318: 3.5,7.1-7.7	1910.4
2. INSPECTION OF REINFORCING STEEL WELDING IN ACCORDANCE WITH TABLE 1105-2-2 , ITEM 2b.	–	–	AWS D1.4 ACI 318: 3.5.2	–
3. INSPECTION OF ANCHORS CAST IN CONCRETE WHERE ALLOWABLE LOADS HAVE BEEN INCREASED OR WHERE STRENGTH DESIGN IS USED	X	–	–	1911.5
4. INSPECTION OF ANCHORS POST INSTALLED IN HARDENED CONCRETE MEMBER			ACI 318: 3-16, 21.3-21-2.28	1909.1
5. VERIFYING USE OF REQUIRED DESIGN MIX	–	X	ACI 318: CH.4,5.2-5.4	1904.2., 1910.2, 1910.3
6. AT THE TIME FRESH CONCRETE IS SAMPLED TO FABRICATE SPECIMENS FOR STRENGTH TESTS, PERFORM SLUMP & AIR CONTENT TESTS & DETERMINE THE TEMPERATURE OF THE CONCRETE	–	X	ASTM C172 ASTM C31 ACI 318: 5.6,5.8	1910.10
7. INSPECTION OF CONCRETE AND SHOTCRETE PLACEMENT FOR PROPER APPLICATION TECHNIQUES.	–	X	ACI 318: 5.9, 5.10	1910.6, 1910.7, 1910.8
8. INSPECTION OF MAINTENANCE OF SPECIFIED CURING TEMPERATURE			ACI 318: 5.11, 5.12, 513	1910.9
9. INSPECTION OF PRESTRESSED CONCRETE				
a. APPLICATION OF PRESTRESSED FORCES	–	–	ACI 318: 18.20 ACI 318: 18.18.4	–
b. GROUNTING OF BONDED PRESTRESSING TENDONS IN THE SEISMIC-FORCE-RESISTING SYSTEM	–	–		
10. ERECTION OF PRECAST MEMBERS			ACI 318: CH. 8	
11. VERIFICATION OF IN-SITU CONCRETE STRENGTH, PRIOR TO STRESSING OF TENDONS IN POST TENSION CONCRETE AND PRIOR TO REMOVAL OF SHORES AND FORMS FROM BEAMS AND STRUCTURAL SLABS			ACI 318: 6.1.1	
12. INSPECTION FOR WORK FOR SHAPE, LOCATION AND DIMENSIONS OF THE CONCRETE MEMBER BEING FORMED	–	X	ACI 318: 6.1.1	–

STRUCTURAL OBSERVATION NOTES:

1. STRUCTURAL OBSERVATION ARE REQUIRED FOR THIS PROJECT AS PER THE CBC 1709.
2. OWNER SHALL EMPLOY THE ENGINEER OR ARCHITECT RESPONSIBLE FOR THE STRUCTURAL DESIGN, OR ANOTHER ENGINEER DESIGNATED BY THE ENGINEER OR ARCHITECT RESPONSIBLE OF STRUCTURAL DESIGN, TO PERFORM STRUCTURAL OBSERVATION AS DEFINED IN SECTION 220
3. A WRITTEN AGREEMENT SHALL BE MADE BETWEEN THE STRUCTURAL OBSERVER AND THE OWNER INDICATING THE FREQUENCY AND ELEMENTS REQUIRED FOR THE STRUCTURAL OBSERVATION. A LETTER FROM THE OWNER INCLUDING THE AGREEMENT OF SERVICES BETWEEN THE STRUCTURAL OBSERVER AND THE OWNER SHALL BE SENT TO THE BUILDING OFFICIAL BEFORE THE FIRST SITE VISIT.
4. A PRE-CONSTRUCTION MEETING IS REQUIRED BETWEEN THE OWNER OR OWNER'S REPRESENTATIVE, ENGINEER RESPONSIBLE FOR THE STRUCTURAL DESIGN, STRUCTURAL OBSERVER, CONTRACTOR, SUB CONTRACTORS AND DEPUTY INSPECTOR. THE PURPOSE OF THIS MEETING IS TO IDENTIFY THE MAJOR STRUCTURAL ELEMENTS AND CONNECTIONS THAT EFFECT THE VERTICAL AND LATERAL LOAD SYSTEMS OF THE STRUCTURE AND TO REVIEW THE SCHEDULING OF THE REQUIRED OBSERVATIONS. A RECORD OF THE MEETING SHALL BE INCLUDED IN THE FIRST OBSERVATION REPORT SUBMITTED TO THE BUILDING INSPECTOR.
5. THE STRUCTURAL OBSERVER SHALL PERFORM THE SITE VISITS AT THOSE STEPS IN THE PROGRESS OF THE WORK THAT ALLOW FOR THE CORRECTION OF THE DEFICIENCIES WITHOUT SUBSTANTIAL EFFORT OR UNCOVERING OF THE WORK INVOLVED. AT MINIMUM THE FOLLOWING SIGNIFICANT CONSTRUCTION STAGES REQUIRE A SITE VISIT AND AN OBSERVATION REPORT FROM THE STRUCTURAL OBSERVER.

CONSTRUCTION STAGES:	ELEMENTS/CONNECTIONS TO BE OBSERVED:
A. FOUNDATION	REINFORCING STEEL FOR WALLS AND FOUNDATION
B. PLYWOOD DIAPHRAGM, ROOF:	PLYWOOD LAYOUT, NAIL PENETRATION & SPACING, DRAG STRUT CONNECTION

6. THE STRUCTURAL OBSERVER SHALL PREPARE A REPORT FOR EACH SIGNIFICANT STAGE OF CONSTRUCTION OBSERVED.
7. A FINAL OBSERVATION REPORT MUST BE SUBMITTED WHICH SHOWS THAT ALL THE OBSERVED DEFICIENCIES WERE RESOLVED AND THE STRUCTURAL SYSTEM GENERALLY CONFORMS WITH THE APPROVED PLANS AND SPECIFICATIONS.
8. DELETED
9. WHEN THE OWNER ELECTS TO CHANGE THE STRUCTURAL OBSERVER OF RECORD, THE OWNER SHALL:
   A. NOTIFY THE BUILDING INSPECTOR IN WRITING BEFORE THE NEXT INSPECTION.
   B. CALL AN ADDITIONAL PRECONSTRUCTION MEETING.
   C. FURNISH THE REPLACEMENT STRUCTURAL OBSERVER WITH THE COPY OF ALL THE PREVIOUS REPORTS.
10. THE ENGINEER OR ARCHITECT OF RECORD SHALL DEVELOP ALL CHANGES TO THE STRUCTURAL SYSTEMS. THE BUILDING DEPARTMENT SHALL REVIEW AND APPROVE ALL THE CHANGES TO THE APPROVED PLANS AND SPECIFICATION.

Landscape Architect:

David Volz Design
Landscape Architecture & Park Planning

Costa Mesa Office:
151 Kalmus Drive, Suite M8
Costa Mesa, CA 92626
Phone: (714) 641-1300
Fax: (714) 641-1323

e-mail: drawings@dvolzdesign.com
www.dvolzdesign.com

Subconsultant:

SKA STRUCTURAL ENGINEERS
Shehzad Khaliq & Assoc., Inc.
3456 Golden Poppy Way
Yorba Linda, Ca. 92886
Phone 714 572-0172
FAX 714 985-4758
Email: skhaliq@skaengrs.com

Seal:

REGISTERED PROFESSIONAL ENGINEER SHEHZAD KHALIQ No. 4390 Exp. 6-30-23 STRUCTURAL STATE OF CALIFORNIA

811 DIGALERT

UNDERGROUND SERVICE ALERT OF SOUTHERN CALIFORNIA

ATTENTION IS DIRECTED TO THE POSSIBLE EXISTENCE OF UNDERGROUND FACILITIES NOT KNOWN OR IN A LOCATION DIFFERENT FROM THAT WHICH IS SHOWN ON THE PLANS OR IN THE SPECIAL PROVISIONS. THE CONTRACTOR SHALL TAKE STEPS TO ASCERTAIN THE EXACT LOCATION OF ALL UNDERGROUND FACILITIES PRIOR TO DOING WORK THAT MAY DAMAGE SUCH FACILITIES OR INTERFERE WITH THEIR SERVICE.

BEFORE EXCAVATING, THE CONTRACTOR SHALL VERIFY THE LOCATION OF UNDERGROUND UTILITIES BY CONTACTING THE UNDERGROUND SERVICE ALERT AT 1-(800)-422-4133.

Revisions:

No.	Date	Revisions	By

Project :
JACK HAMMETT SPORTS COMPLEX
LANDSCAPE, PARKING LOT EXPANSION & BUILDING IMPROVEMENTS
2750 FAIRVIEW ROAD

Owner:
City of Costa Mesa

Project No :
Drawn By : RRR
Checked By : SK
Date : June 30, 2019
Scale : NOTED

Drawing Title :
STRUCTURAL OBSERVATION SPECIAL INSPECTION

Drawing No :
SN-2

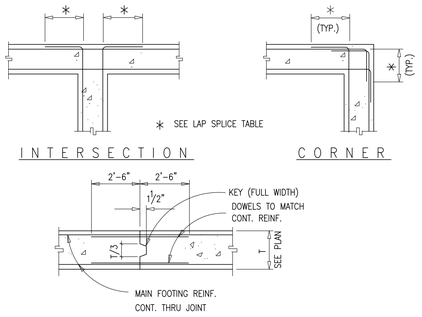

CONTINUOUS FOOTING

NOT TO SCALE — 14 / –

TENSION LAP SPLICE LENGTH – CLASS B							DEVELOPMENT LENGTH (Id) – CLASS A					
	3000 PSI CONC f'c		4000 PSI CONC f'c		5000 PSI CONC f'c		3000 PSI CONC f'c		4000 PSI CONC f'c		5000 PSI CONC f'c	
BAR SIZE	TOP	OTHER	TOP	OTHER	TOP	OTHER	TOP	OTHER	TOP	OTHER	TOP	OTHER
#3	28	22	24	19	22	17	22	17	19	15	17	13
#4	37	29	32	25	29	22	29	22	25	19	22	17
#5	47	36	40	31	36	28	36	28	31	24	28	22
#6	56	43	48	37	43	33	43	33	37	29	33	26
#7	81	63	70	54	63	49	63	48	54	42	49	37
#8	93	72	80	62	72	55	72	55	62	48	55	43
#9	105	81	91	70	81	63	81	62	70	54	63	48
#10	118	91	102	79	91	70	91	70	79	61	70	54
#11	131	101	113	87	101	78	101	78	87	67	78	60

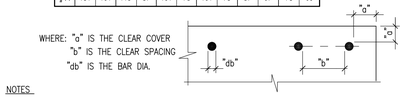

NOTES:

1. ALL SPLICES SHALL BE TENSION LAP SPLICES U.N.O.
2. LENGTHS SHOWN ARE FOR GRADE 60 UNCOATED BARS.
3. LENGTHS SHOWN ARE IN INCHES.
4. INCREASE LENGTHS 30% FOR LIGHT WEIGHT CONCRETE AND INDIVIDUAL BARS WITHIN A BUNDLE SHALL NOT OVERLAP. OF FRESH CONCRETE CAST BELOW THEM .
5. TOP BARS – HORIZONTAL BARS PLACED WITH MORE THAN 12" AT FOUR BAR BUNDLES (WHERE 2 BARS LAP WITH 2 OTHER BARS)
6. INCREASE LENGTHS 50% WHERE a < db OR WHERE b < db FOR BEAMS AND COLUMNS OR WHERE b < 2db FOR OTHER ELEMENTS.
7. FOR #14 AND #18 BARS, USE MECHANICAL SPLICE IN ACCORDANCE WITH UBC REQUIREMENTS.

TENSION LAP SPLICE SCHEDULE

NOT TO SCALE — 10 / –

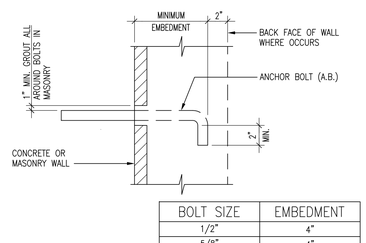

BOLT SIZE	EMBEDMENT
1/2"	4"
5/8"	4"
3/4"	5"
7/8"	6"
1"	7"

NOTE:
MINIMUM BOLT SPACING SHALL BE 12 BOLT DIAMETERS WITH A MINIMUM EDGE DISTANCE OF 6 DIAMETERS AND WITH A MIN OF 6" TO END OF WALL

BOLT EMBEDMENT SCHEDULE

NOT TO SCALE — 7 / –

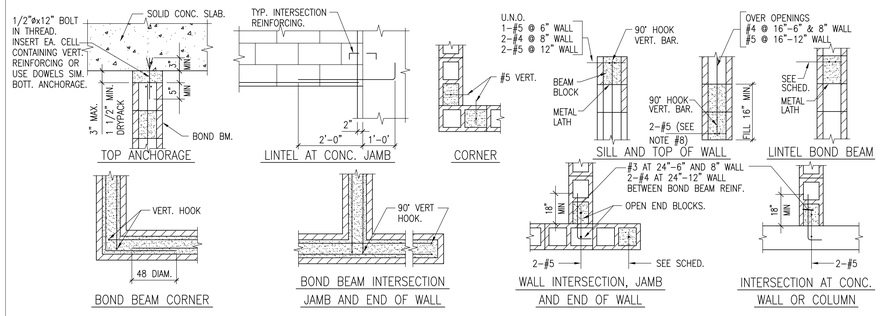

TYPICAL CONCRETE BLOCK WALL DETAILS

NOT TO SCALE — 1 / –

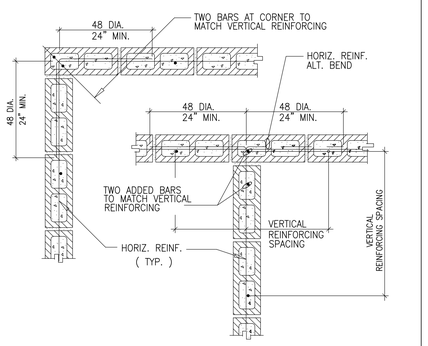

MASONRY CORNER & INTERSECTION

NOT TO SCALE — 15 / –

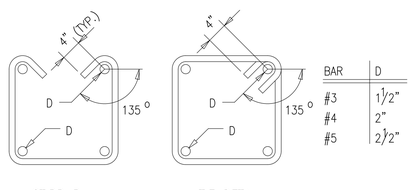

BAR	D
#3	1 1/2"
#4	2"
#5	2 1/2"

REINF. BAR BENDS, TIES & STIRRUPS

NOT TO SCALE — 11 / –

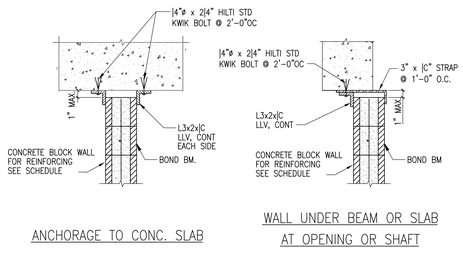

TYP. NON-LOAD BEARING BLOCK WALL CONNECTION DETAIL

NO SCALE — 5 / –

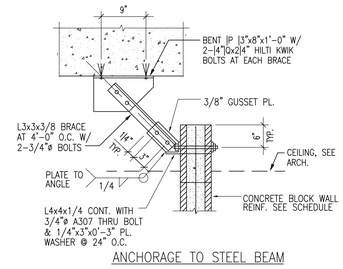

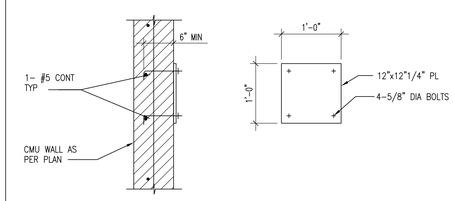

EMBED PLATE @ CMU WALL

SCALE: NONE — 2 / –

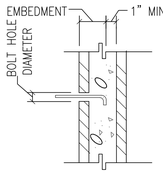

BOLT DIAMETER	EMBEDMENT	
	8" CMU	10" CMU
1/2"	4"	6
5/8"	4"	6
3/4"	5"	7
7/8"	6"	7
1"	6"	7

NOTE:
THE BOLT HOLE DIAMETER SHALL BE BOLT DIAMETER +2"

MASONRY WALL ANCHOR BOLT EMBEDMENT

NOT TO SCALE — 16 / –

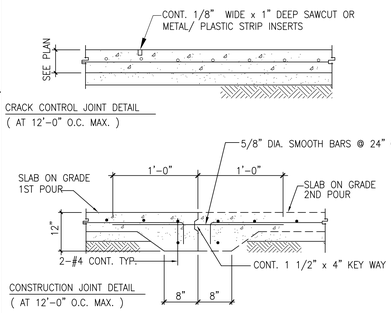

SLAB CONSTRUCTION/CONTROL JOINTS

NOT TO SCALE — 12 / –

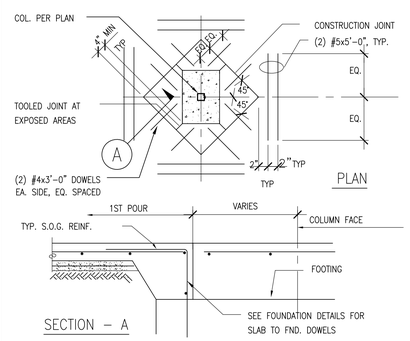

TYP. COLUMN BLOCKOUT

NOT TO SCALE — 8 / –

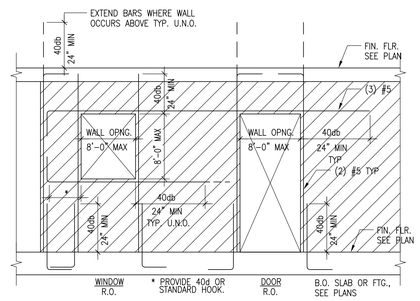

NOTES:

1. WHERE ONE OPENING OCCURS ABOVE ANOTHER, EXTEND ALL SILL AND LINTEL REINF. 3'-0" BEYOND FURTHEST OPENING IN EACH DIRECTION.
2. WHERE OPENINGS IN A HORIZONTAL LINE ARE SPACED LESS THAN THE WIDTH OF THE MAX. ADJACENT OPENING APART, RUN LINTEL AND SILL REINF. CONTINUOUS BETWEEN OPENINGS.
3. EXTEND VERTICAL BARS FROM FLOOR TO FLOOR OR (WHERE OPENING INTERSECTS BAR) FROM FLOOR TO OPENING.
4. TYPICAL WALL REINF. AT TYPICAL SPACING BETWEEN SPECIAL BARS IS TO BE USED. SEE TYPICAL WALL REINF. DETAILS AND WALL SECTIONS.
5. EXTEND VERTICAL BARS 3'-0" PAST FLOOR JOINT OR PROVIDE EQUIVALENT DOWELS.

TYPICAL REINFORCING AROUND WALL OPENING FOR CONCRETE BLOCK

NOT TO SCALE — 3 / –

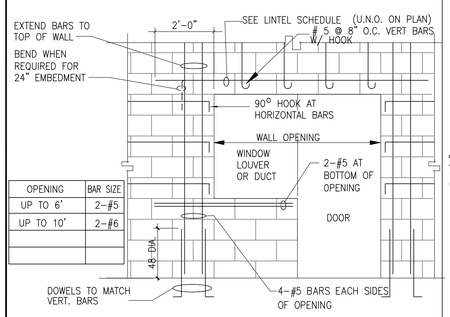

OPENING	BAR SIZE
UP TO 6'	2-#5
UP TO 10'	2-#6

MASONRY OPENING

NOT TO SCALE — 17 / –

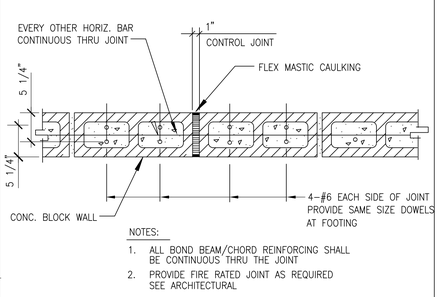

NOTES:

1. ALL BOND BEAM/CHORD REINFORCING SHALL BE CONTINUOUS THRU THE JOINT
2. PROVIDE FIRE RATED JOINT AS REQUIRED SEE ARCHITECTURAL

C.M.U. WALL CONTROL JOINT

NOT TO SCALE — 13 / –

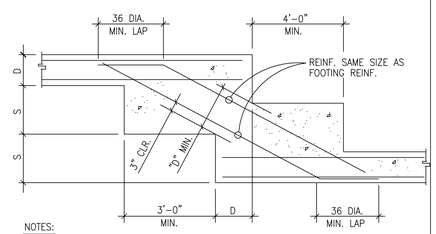

NOTES:

S = 1'-6" MAX.
D = DEPTH OF FOOTING
S— — — — S INDICATES STEP FOOTING ON PLAN

TYPICAL STEPPED FOOTING

NO SCALE — 9 / –

MINIMUM REINFORCEMENT IN CONC BLOCK WALLS*			
WALL THICK.	HORIZ REINF	VERT REINF	JAMB AND END OF WALL REINF
6" BLOCK	#4@24"O.C.	#4@24"O.C.	1-#5
8" BLOCK	#4@24" O.C.	#5@24"O.C.	2-#5
12" BLOCK	#5@24"O.C	#6@24"O.C.	2-#5

NOTES:

1. WHERE REINFORCING IS NOT OTHERWISE SHOWN ON SECTIONS, DETAILS, OR ELEVATIONS. FOR CONNECTION AT TOP TO UNDER SIDE OF FLOOR OR CEILING, SEE 8/- TYP.
2. FOR CONNECTION AT STRUCTURAL SLAB OR SLAB ON GRADE, SEE 10/- TYP.

TYP. NON-LOAD BEARING BLOCK WALL REINFORCING SCHEDULE

NO SCALE — 6 / –

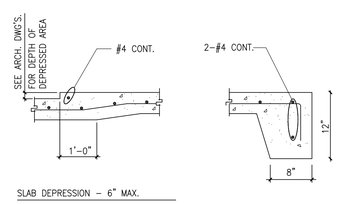

SLAB DEPRESSION – 6" MAX.

SLAB DEPRESSION

SCALE:NONE — 4 / –

Landscape Architect:

David Volz Design
Landscape Architecture & Park Planning

Costa Mesa Office:
151 Kalmus Drive, Suite M8
Costa Mesa, CA 92626
Phone: (714) 641-1300
Fax: (714) 641-1323

e-mail: drawings@dvolzdesign.com
www.dvolzdesign.com

Subconsultant:

SKA STRUCTURAL ENGINEERS
Shehzad Khaliq & Assoc., Inc.
3456 Golden Poppy Way
Yorba Linda, Ca. 92886
Phone 714 572-0172
FAX 714 985-4758
Email: skhaliq@skaengrs.com

Seal:

REGISTERED PROFESSIONAL ENGINEER — No. 4390 — Exp. 6-30-23 — STRUCTURAL — STATE OF CALIFORNIA

811 DIGALERT
UNDERGROUND SERVICE ALERT OF SOUTHERN CALIFORNIA

ATTENTION IS DIRECTED TO THE POSSIBLE EXISTENCE OF UNDERGROUND FACILITIES NOT SHOWN OR IN A LOCATION DIFFERENT FROM THAT WHICH IS SHOWN ON THE PLANS OR IN ADDITIONAL UNDERGROUND FACILITIES NOT MENTIONED. TAKE STEPS TO ASCERTAIN THE EXACT LOCATION OF ALL UNDERGROUND FACILITIES PRIOR TO DOING WORK THAT MAY DAMAGE SUCH FACILITIES OR INTERFERE WITH THEIR SERVICE.

BEFORE EXCAVATING, THE CONTRACTOR SHALL VERIFY THE LOCATION OF UNDERGROUND FACILITIES BY CALLING THE UNDERGROUND SERVICE ALERT AT T-(800)-422-4133.

Revisions:

No.	Date	Revisions	By

Project :
JACK HAMMETT SPORTS COMPLEX
LANDSCAPE, PARKING LOT EXPANSION & BUILDING IMPROVEMENTS
2750 FAIRVIEW ROAD

Owner:
City of Costa Mesa

Project No :
Drawn By : RRR
Checked By : SK
Date : June 30, 2019
Scale : NOTED

Drawing Title :
TYPICAL CONCRETE DETAILS

Drawing No :
ST-1

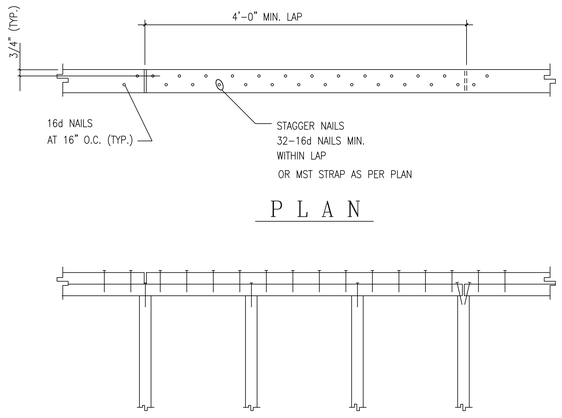

10 / -

STUD WALL TOP PLATES SPLICE

NOT TO SCALE

7 / -

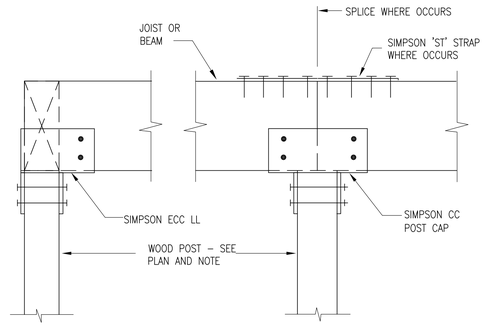

TYP. POST CAP CONN.

NOT TO SCALE

4 / -

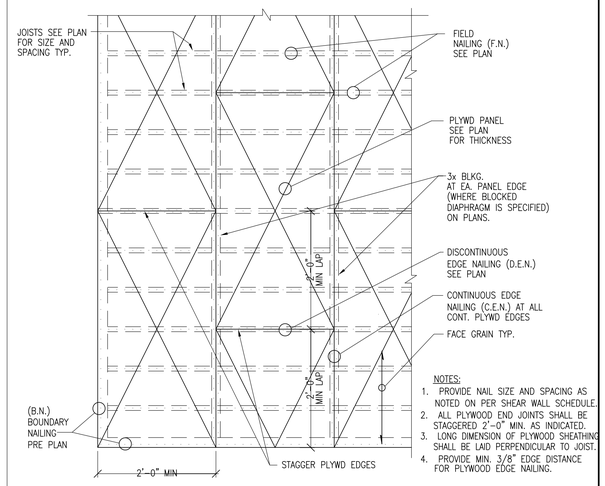

NOTES:
1. PROVIDE NAIL SIZE AND SPACING AS NOTED ON PER SHEAR WALL SCHEDULE.
2. ALL PLYWOOD END JOINTS SHALL BE STAGGERED 2'-0" MIN. AS INDICATED.
3. LONG DIMENSION OF PLYWOOD SHEATHING SHALL BE LAID PERPENDICULAR TO JOIST.
4. PROVIDE MIN. 3/8" EDGE DISTANCE FOR PLYWOOD EDGE NAILING.

TYPICAL PLYWOOD LAYOUT

NOT TO SCALE

1 / -

11 / -

NOT TO SCALE

8 / -

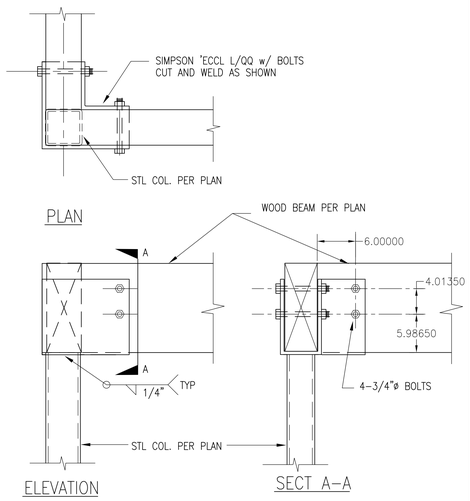

TYP. CORNER POST CAP CONN.

NO SCALE

5 / -

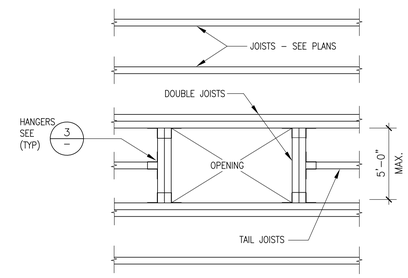

NOTE:
SEE ARCHITECTURAL, PLUMBING, MECHANICAL AND ELECTRICAL DRAWINGS FOR SIZE AND LOCATION OF OPENINGS.

TYP. FLOOR AND ROOF OPENING

SCALE: NONE

2 / -

12 / -

NO SCALE

9 / -

STANDARD PLATE WASHER SCHEDULE

BOLTS SIZE	PLATE SIZE	REMARKS
1/2" DIA	3/16" x 2 1/2" x 2 1/2"	
5/8" DIA	1/4" x 3" x 3"	
3/4" DIA	5/16" x 3" x 3"	
7/8" DIA	3/8" x 3 1/2" x 3 1/2"	
1" DIA	3/8" x 3 3/4" x 3 3/4"	
1 1/8" DIA	3/8" x 3 3/4" x 3 3/4"	

NOTE: PROVIDE STANDARD PLATE WASHER AT ALL SILL PLATE ANCHORS, MACHINE BOLTS AND AT HOLD DOWN BOLTS CONNECTED TO VERTICAL POST.

STANDARD PLATE WASHER SCHEDULE

NO SCALE

6 / -

SIMPSON HANGER	
SIZE	ROOF
2x6	LUP
2x8, 2x10, 2x12	U
TJI JOIST ALL SIZES	BV
PSL 3 1/4 x	WP
PSL 5 1/4 x	GLT
PSL 7 x	GLT
4x12	B412
6x12	B612

NOTE: USE HANGERS ABOVE ON PLANS U.N.O.

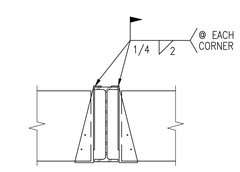

@ STEEL BEAM WITHOUT NAILER

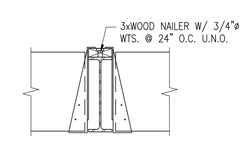

@ STEEL BEAM WITH NAILER

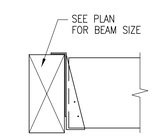

@ WOOD BEAM

JOIST HANGER SCHEDULE

NOT TO SCALE

3 / -

Landscape Architect:

David Volz Design
Landscape Architecture & Park Planning

Costa Mesa Office:
151 Kalmus Drive, Suite M8
Costa Mesa, CA 92626
Phone: (714) 641-1300
Fax: (714) 641-1323

e-mail: drawings@dvolzdesign.com
www.dvolzdesign.com

Subconsultant:

SKA
STRUCTURAL ENGINEERS
Shehzad Khaliq & Assoc., Inc.
3456 Golden Poppy Way
Yorba Linda, Ca. 92886
Phone 714 572-0172
FAX 714 985-4758
Email: skhaliq@skaengrs.com

Seal:

REGISTERED PROFESSIONAL ENGINEER
SHEHZAD KHALIQ
No. 4390
Exp. 6-30-23
STRUCTURAL
STATE OF CALIFORNIA

811 DIGALERT

UNDERGROUND SERVICE ALERT OF SOUTHERN CALIFORNIA

ATTENTION IS DIRECTED TO THE POSSIBLE EXISTENCE OF UNDERGROUND FACILITIES NOT KNOWN OR IN A LOCATION DIFFERENT FROM THAT WHICH IS SHOWN ON THE PLANS OR IN THE SPECIFICATIONS. THE CONTRACTOR SHALL TAKE ALL STEPS TO ASCERTAIN THE EXACT LOCATION OF ALL UNDERGROUND FACILITIES PRIOR TO DOING WORK THAT MAY DAMAGE SUCH FACILITIES OR INTERFERE WITH THEIR SERVICE.

BEFORE EXCAVATING, THE CONTRACTOR SHALL VERIFY THE LOCATION OF UNDERGROUND UTILITIES BY CONTACTING THE UNDERGROUND SERVICE ALERT AT 1-(800)-422-4133.

Revisions:

No.	Date	Revisions	By

Project :
JACK HAMMETT SPORTS COMPLEX
LANDSCAPE, PARKING LOT EXPANSION & BUILDING IMPROVEMENTS
2750 FAIRVIEW ROAD

Owner:
City of Costa Mesa

Project No :
Drawn By : RRR
Checked By : SK
Date : June 30, 2019
Scale : NOTED

Drawing Title :

TYPICAL WOOD DETAILS

Drawing No :

ST-2

FOUNDATION NOTES:

1. CONCRETE SLAB ON GRADE SHALL BE 5" THICK WITH #4 @ 18" O.C. E.W.
2. SEE ARCHITECTURAL, ELECTRICAL, PLUMBING, AND MECHANICAL DRAWINGS FOR SIZE AND LOCATION OF SLAB DEPRESSIONS AND OPENINGS REQUIRED FOR DUCTS, PIPE, AND SLEEVES.
3. BOTTOM OF FOOTINGS SHALL BE ESTABLISHED ON COMPACTED SIOL.
4. PROVIDE 2-#5 BARS T & B IN ALL FOOTINGS U.N.O.
5. ALL EPOXY DOWELS SHALL BE INSTALLED AS PER MANUFACTURERS RECOMMENDATIONS & REQUIRES SPECIAL INSPECTION.

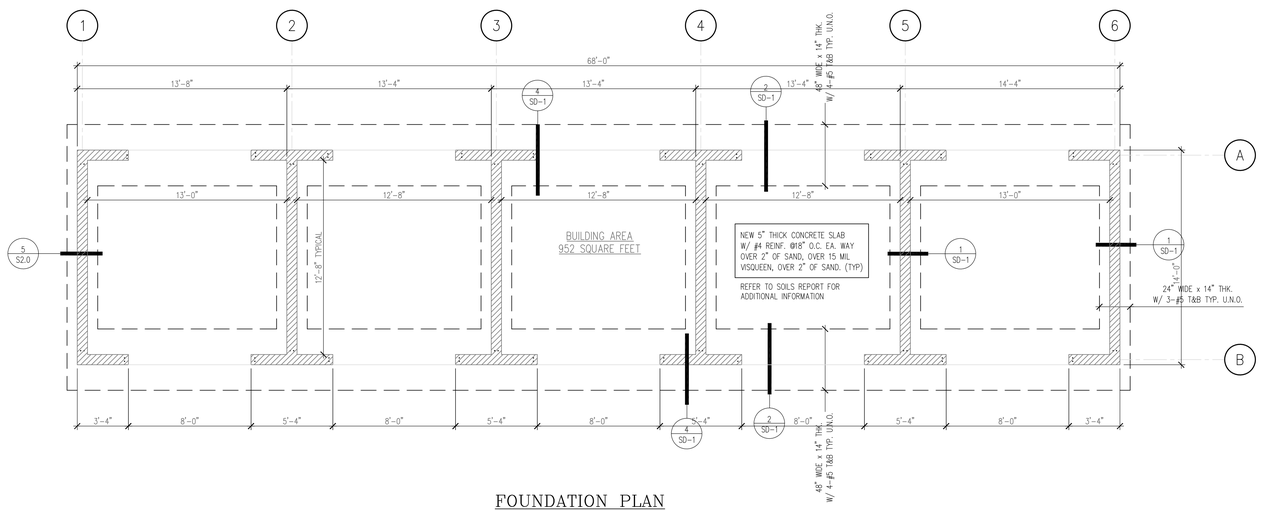

FOUNDATION PLAN

Landscape Architect:

David Volz Design
Landscape Architecture & Park Planning

Costa Mesa Office:
151 Kalmus Drive, Suite M8
Costa Mesa, CA 92626
Phone: (714) 641-1300
Fax: (714) 641-1323

e-mail: drawings@dvolzdesign.com
www.dvolzdesign.com

Subconsultant:

SKA
STRUCTURAL ENGINEERS
Shehzad Khaliq & Assoc., Inc.
3456 Golden Poppy Way
Yorba Linda, Ca. 92886
Phone 714 572-0172
FAX 714 985-4758
Email: skhaliq@skaengrs.com

Seal:

REGISTERED PROFESSIONAL ENGINEER
SHEHZAD KHALIQ
No. 4390
Exp. 6-30-23
STRUCTURAL
STATE OF CALIFORNIA

811
DIGALERT

UNDERGROUND SERVICE ALERT OF SOUTHERN CALIFORNIA

ATTENTION IS DIRECTED TO THE POSSIBLE EXISTENCE OF UNDERGROUND FACILITIES NOT KNOWN OR IN A LOCATION DIFFERENT FROM THAT WHICH IS SHOWN ON THE PLANS OR IN THE SPECIAL PROVISIONS. THE CONTRACTOR SHALL TAKE STEPS TO ASCERTAIN THE EXACT LOCATION OF ALL UNDERGROUND FACILITIES PRIOR TO DOING WORK THAT MAY DAMAGE SUCH FACILITIES OR INTERFERE WITH THEIR SERVICE.

BEFORE EXCAVATING, THE CONTRACTOR SHALL VERIFY THE LOCATION OF UNDERGROUND UTILITIES BY CONTRACTING UNDERGROUND SERVICE ALERT AT 1-(800)-422-4133.

Revisions:

No.	Date	Revisions	By

Project :
JACK HAMMETT SPORTS COMPLEX
LANDSCAPE, PARKING LOT EXPANSION & BUILDING IMPROVEMENTS
2750 FAIRVIEW ROAD

Owner:
City of Costa Mesa

Project No :	
Drawn By :	RRR
Checked By :	SK
Date :	June 30, 2019
Scale :	NOTED

Drawing Title :

FOUNDATION PLAN

Drawing No :

S.1

ROOF FRAMING NOTES

1. SEE SHEETS ST-1 & ST-2 FOR TYPICAL DETAILS NOT REFERANCED ON THE PLAN.
2. SEE ARCHITECTURAL PLANS FOR ELEVATIONS, SLOPES AND DIMENSIONS.
   a) ROOF SHEATHING SHALL BE:
      19/32" STRUCT 1 PLYWOOD (P.I. 32/16) WITH COMMON NAILS
      B.N. 10d @ 4" O.C.
      E.N. 10d @ 6" O.C.
      F.N. 10d @ 12" O.C.
      BLOCKED DIAPHRAGM (4XMEMBERS MIN. AT PANEL EDGES)
   b) PROVIDE 1/2" THK PLYWOOD SHEATHING AT ALL EXTERIOR WALL SURFACE WITH MINIMUM NAILING OF 6" E.N., 6" B.N., 12" F.N. UNLESS NOTED OTHERWISE ON PLANS, ELEVATIONS OR DETAILS.
3. ALL BEAMS SHALL BE FRAMED FLUSH U.N.O.
4. ALL BEAMS SHALL BE SUPPORTED ON POST w/MIN. POST SIZE 4x4 U.N.O.
5. ALL POSTS SHOWN ABOVE FLOORS SHALL CONTINUE WITH SAME OR GREATER SIZE POSTS BELOW TO FOUNDATION/GRADE BEAMS.
6. PROVIDE PARALLAM BEAM/GIRDER (PSL) PER TRUSS JOIST MACMILLIAN SPECIFICATION AND STRUCTURAL DESIGN LOAD CRITERIA.
7. HDR ARE NOT SHOWN ON PLANS. SEE SCHEDULE BELOW.
8. FOR SLOPES SEE ARCH. DRAWINGS
9. TYPICAL DETAILS ARENOT REFERENCED ON FRAMING PLANS.
10. ROOF DIAPHGRAM NAILING TO BE INSPECTED BEFORE COVERING FACE GRAIN OF PLYWOOD SHALL BE PERPENDICULAR TO SUPPORTS. FLOOR SHALL HAVE TONGUE AND GROOVE OR BLOCKED PANEL EDGES. PLYWOOD SPANS SHALL CONFORM WITH TABLE 2304.7
11. ALL DIAPHRAGM AND SHEAR WALL NAILING SHALL UTILIZE COMMON NAILS OR GALVANIZED BOX (T2306.4.1)
12. PROVIDE LEAD HOLE 40%-70% OF THREADED SHANK DIA AND FULL DIA. FOR SMOOTH SHANK PORTION

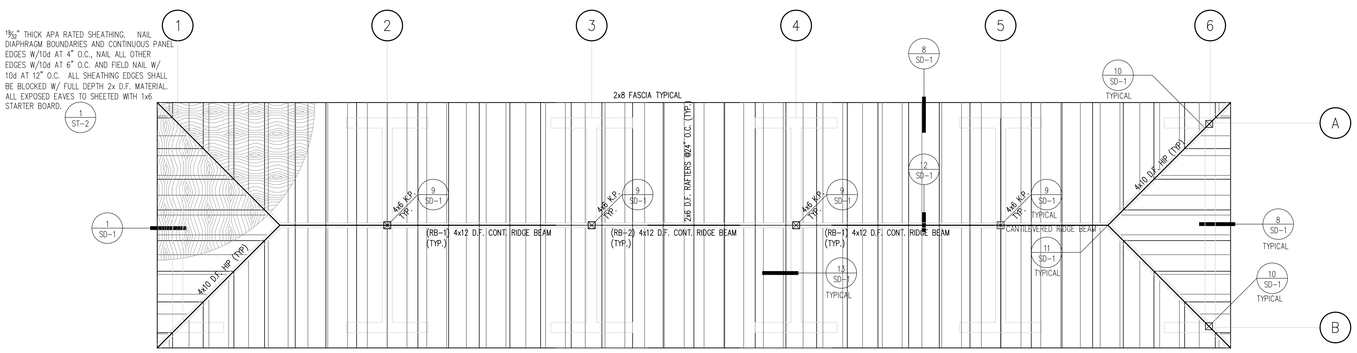

ROOF FRAMING PLAN

Landscape Architect:

David Volz Design
Landscape Architecture & Park Planning

Costa Mesa Office:
151 Kalmus Drive, Suite M8
Costa Mesa, CA 92626
Phone: (714) 641-1300
Fax: (714) 641-1323

e-mail: drawings@dvolzdesign.com
www.dvolzdesign.com

Subconsultant:

SKA STRUCTURAL DESIGNERS
Shehzad Khaliq & Assoc., Inc.
3456 Golden Poppy Way
Yorba Linda, Ca. 92886
Phone 714 572-0172
FAX 714 985-4758
Email: skhaliq@skaengrs.com

Seal:

REGISTERED PROFESSIONAL ENGINEER
SHEHZAD KHALIQ
No. 4390
Exp. 6-30-23
STRUCTURAL
STATE OF CALIFORNIA

811 DIGALERT

UNDERGROUND SERVICE ALERT OF SOUTHERN CALIFORNIA

ATTENTION IS DIRECTED TO THE POSSIBLE EXISTENCE OF UNDERGROUND FACILITIES NOT KNOWN OR IN A LOCATION DIFFERENT FROM THAT SHOWN ON THE PLANS. IN ADDITION TO THE SPECIAL PROVISIONS, THE CONTRACTOR SHALL TAKE STEPS TO ASCERTAIN THE EXACT LOCATION OF ALL UNDERGROUND FACILITIES TO AVOID DAMAGE THERETO OR DAMAGE SUCH FACILITIES OR INTERFERE WITH THEIR SERVICE.

BEFORE EXCAVATING, THE CONTRACTOR SHALL VERIFY THE LOCATION OF UNDERGROUND UTILITIES BY CONTRACTING UNDERGROUND SERVICE ALERT AT 1-(800)-422-4133.

Revisions:

No.	Date	Revisions	By

Project :
JACK HAMMETT SPORTS COMPLEX
LANDSCAPE, PARKING LOT EXPANSION & BUILDING IMPROVEMENTS
2750 FAIRVIEW ROAD

Owner:
City of Costa Mesa

Project No :
Drawn By : RRR
Checked By : SK
Date : June 30, 2019
Scale : NOTED

Drawing Title :
ROOF FRAMING PLAN

Drawing No :
S.2

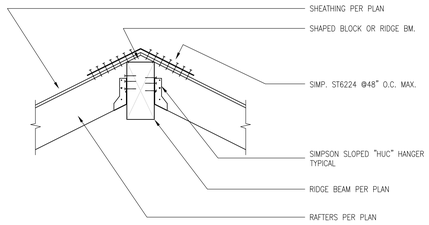

RIDGE TO ROOF JOIST | 12

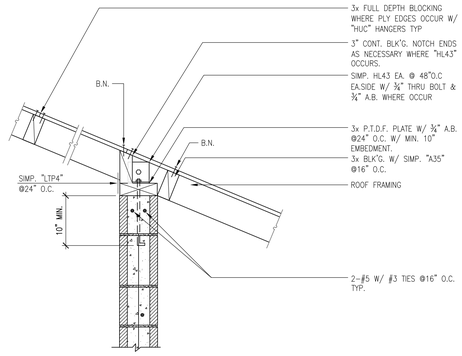

ROOF OVERHANG | 8

DETAIL | 5

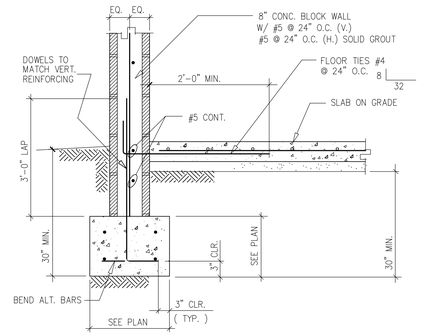

DETAIL | 1

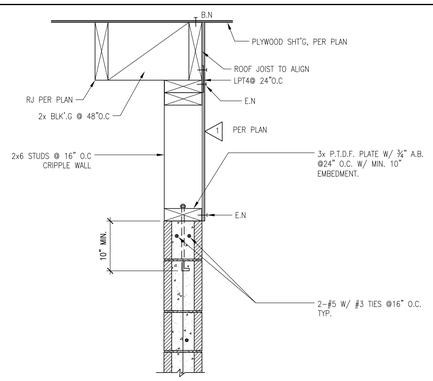

DETAIL | 13

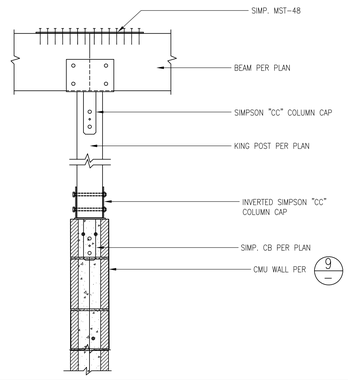

KING POST | 9

DETAIL | 6

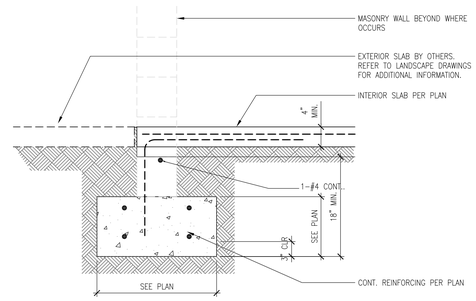

SLAB & CONT. FOOTING AT OPENING | 2

DETAIL | 14

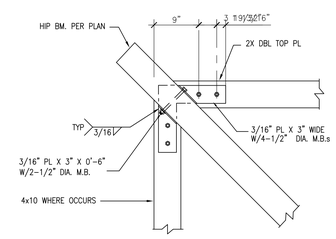

HIP AT CORNER | 10

DETAIL | 6

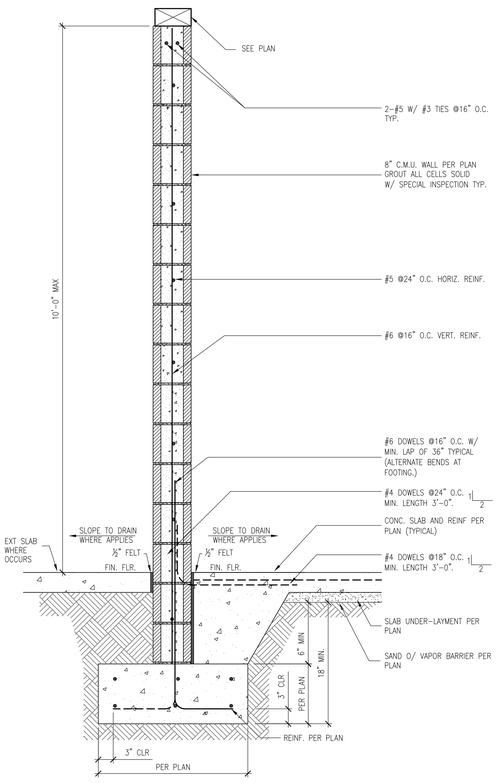

INTERIOR NON BEATING WALL SECTION | 4

DETAIL | 15

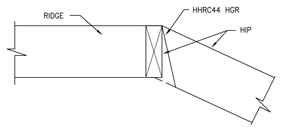

HIP TO BEAM | 11

DETAIL | 7

Landscape Architect:

David Volz Design
Landscape Architecture & Park Planning

Costa Mesa Office:
151 Kalmus Drive, Suite M8
Costa Mesa, CA 92626
Phone: (714) 641-1300
Fax: (714) 641-1323

e-mail: drawings@dvolzdesign.com
www.dvolzdesign.com

Subconsultant:

SKA STRUCTURAL ENGINEERS
Shehzad Khaliq & Assoc., Inc.
3456 Golden Poppy Way
Yorba Linda, Ca. 92886
Phone 714 572-0172
FAX 714 985-4758
Email: skhaliq@skaengrs.com

Seal:

REGISTERED PROFESSIONAL ENGINEER SHEHZAD KHALIQ No. 4390 Exp. 6-30-23 STRUCTURAL STATE OF CALIFORNIA

811 DIGALERT

UNDERGROUND SERVICE ALERT OF SOUTHERN CALIFORNIA

ATTENTION IS DIRECTED TO THE POSSIBLE EXISTENCE OF UNDERGROUND UTILITIES WHICH MAY BE FOUND TO BE QUITE DIFFERENT FROM THAT WHICH IS SHOWN ON THE PLANS OR IN THE SPECIAL PROVISIONS. THE CONTRACTOR SHALL TAKE ALL PRECAUTIONARY MEASURES TO PROTECT THE UTILITY UNDERGROUND FACILITIES PRIOR TO DOING WORK THAT MAY DAMAGE SUCH FACILITIES OR INTERFERE WITH THEIR SERVICE.

BEFORE EXCAVATING, THE CONTRACTOR SHALL VERIFY THE LOCATION OF UNDERGROUND UTILITIES BY CONTACTING UNDERGROUND SERVICE ALERT AT 1-(800)-422-4133.

Revisions:

No.	Date	Revisions	By

Project :
JACK HAMMETT SPORTS COMPLEX
LANDSCAPE, PARKING LOT EXPANSION & BUILDING IMPROVEMENTS
2750 FAIRVIEW ROAD

Owner:
City of Costa Mesa

Project No :
Drawn By : RRR
Checked By : SK
Date : June 30, 2019
Scale : NOTED

Drawing Title :
DETAILS

Drawing No :
SD.1

GENERAL NOTES

1. ALL MATERIALS AND WORKMANSHIP SHALL CONFORM TO THE LATEST CALIFORNIA CODE OF REGULATIONS (CCR), NATIONAL ELECTRICAL CODE EDITION AND ALL APPLICABLE LOCAL CODES AND REGULATIONS.
2. ALL PANELS, SWITCHES, ETC. SHALL HAVE SUFFICIENT GUTTER SPACE AND LUGS IN COMPLIANCE TO UL REQUIREMENTS TO ACCOMMODATE CONDUCTORS SHOWN.
3. WHERE WIRE SIZES ARE INDICATED ON PLANS, FOR INDIVIDUAL CIRCUITS, THE WIRE SIZE INDICATED SHALL APPLY TO THE COMPLETE CIRCUIT, UNLESS OTHERWISE NOTED.
4. CONTRACTOR SHALL VERIFY THE EXACT LOCATION OF MECHANICAL, PLUMBING AND OTHER EQUIPMENT REQUIRING ELECTRICAL CONNECTION PRIOR TO ANY WORK.
5. CONTRACTOR SHALL EXTEND WIRING FROM ALL JUNCTION BOXES, SWITCHES, ETC. AND MAKE FINAL CONNECTION AS REQUIRED TO ALL BUILDING EQUIPMENT REQUIRING ELECTRICAL CONNECTIONS.
6. LOCATION OF LOCAL WALL SWITCHES ARE SUBJECT TO MODIFICATIONS. AT OR NEAR DOORS, INSTALL SWITCHES ON SIDE OPPOSITE TO DOOR HINGE. VERIFY FINAL HINGE LOCATION IN FIELD PRIOR TO ANY WORK.
7. DRAWINGS ARE DIAGRAMMATIC AND INDICATE GENERAL ARRANGEMENT OF SYSTEMS AND WORK INCLUDED. FOLLOW DRAWINGS IN LAYING OUT WORK AND CHECK DRAWINGS OR OTHER TRADES RELATING TO WORK TO VERIFY SPACE IN WHICH WORK WILL BE INSTALLED. MAINTAIN HEADROOM AND MINIMUM CODE REQUIRED WORKING CLEARANCES AT ALL TIMES.
8. CONTRACTOR SHALL COORDINATE THE LOCATION OF ALL WALL OUTLET BOXES FOR SWITCHES, BELL/STROBES, FIRE ALARM PULL STATIONS, RECEPTACLES ETC. WITH CABINETS, FURNITURE, EQUIPMENT ETC., TO AVOID CONFLICT.
9. WHERE ELECTRIC MOTORS OR HEATERS ARE INSTALLED IN HUNG CEILINGS, PROVIDE DISCONNECT SWITCH IN HUNG CEILING WITHIN REACH FROM ACCESS POINT.
10. FURNISH APPROVED EXPANSION FITTINGS WHERE RACEWAY CROSSES BUILDING EXPANSION JOINTS.
11. FURNISH PULL STRING IN EACH RACEWAY RUN OVER 10' IN LENGTH, IN WHICH PERMANENT WIRING IS NOT INSTALLED.
12. NOT MORE THAN THREE LIGHTING OR CONVENIENCE OUTLET CIRCUITS ARE PERMITTED IN ONE CONDUIT, PROVIDE SEPARATE CONDUIT FOR EACH HOMERUN INDICATED ON THE DRAWING, UNLESS INDICATED OTHERWISE.
13. PROVIDE PULL BOXES WHEREVER NECESSARY TO FACILITATE PULLING OF CONDUCTORS. COORDINATE LOCATIONS OF BOXES WITH OTHER TRADES TO AVOID CONFLICT. PULL BOXES SHALL BE ACCESSIBLE. THE SIZE OF PULL BOX SHALL COMPLY WITH N.E.C. REQUIREMENTS.
14. OUTLET BOXES FOR FIXTURES RECESSED IN HUNG CEILING SHALL BE ACCESSIBLE THROUGH OPENING CREATED BY REMOVAL OF FIXTURES.
15. SEE MECHANICAL AND PLUMBING DRAWINGS AND SPECIFICATION FOR ADDITIONAL CONNECTION REQUIREMENTS TO CONTROL PANELS, CONTROL TRANSFORMERS, POWER FOR CONTROL SYSTEM EP AND PE SWITCHES, TIME CLOCKS, VALVES, STATS, RELAYS, DUCT SMOKE DETECTOR LOCATIONS, ETC. INDICATED ON CONTROL WIRING DIAGRAMS. ELECTRICAL CONTRACTOR SHALL VERIFY FINAL CONTROL WIRING REQUIREMENTS WITH MECHANICAL AND PLUMBING CONTRACTORS PRIOR TO ANY WORK AND PROVIDE ALL NECESSARY DEVICES AND CONNECTIONS AS REQUIRED.
16. ALL EXTERIOR ELECTRICAL DEVICES AND EQUIPMENT INCLUDING THOSE THAT ARE EXPOSED TO OUTSIDE ENVIRONMENT (UP TO 16') SHALL BE WEATHERPROOF TYPE, NEMA 3R.
17. NO CONDUIT RUNS SHALL BE ALLOWED IN CONCRETE SLABS. ALL CONDUITS WILL BE PLACED ABOVE ACCESSIBLE CEILING SPACES UNLESS SPECIFICALLY INDICATED TO BE UNDERGROUND.
18. LIGHTING, POWER, TELEPHONE AND COMMUNICATIONS OUTLETS SHALL NOT BE PLACED BACK-TO-BACK.
19. WHERE MORE THAN ONE LIGHT SWITCH OCCURS AT SAME LOCATION, SWITCHES SHALL BE MOUNTED IN A MULTIPLE GANG BOX UNDER A SINGLE COVER PLATE. PLATES WITH MORE THAN (3) LIGHT SWITCHES SHALL BE LABELED TO INDICATE THE LIGHT FIXTURES CONTROLLED.
20. DISCONNECT SWITCHES SHALL BE MOUNTED ON INDIVIDUAL SUPPORTS, OR OTHERWISE DIRECTLY ON EQUIPMENT, PROVIDED NO MODIFICATION TO EQUIPMENT IS NECESSARY.
21. ALL ELECTRICAL POWER LIGHTING, TELEPHONE OR SIGNAL WIRING IN FIRE RATED WALL IS TO BE INSTALLED IN A METALLIC CONDUIT SYSTEM.
22. ALL ELECTRIC MATERIAL SHALL BE LISTED BY "UL" FOR THE TYPE OF APPLICATION AND "UL" LABEL SHALL APPEAR ON ALL ELECTRICAL EQUIPMENT.
23. CONTACT UTILITY COMPANIES FOR SCOPE OF WORK PRIOR TO SUBMITTING BID; INCLUDE UTILITY CHARGES IF ANY.
24. ALL DISTRIBUTION AND CONTROL EQUIPMENT (SUCH AS CB's, SWITCHES, CONTACTORS, ETC.), TERMINATIONS SHALL BE FULLY RATED PER UL AS FOLLOWS:

    a. 125A OR LESS : 60°C OR MORE;
    b. MORE THAN 125A : 75°C OR MORE.
25. CONDUCTORS SHALL HAVE UNDERWRITER'S LABORATORIES, INC.(UL) LISTED, 600 VOLT INSULATION OF TYPE SPECIFIED BELOW OR ELSEWHERE IN THE SPECIFICATIONS. CONDUCTORS SHALL BE COPPER.

    1. BRANCH CIRCUITS - LIGHTING AND POWER.

    a. #10 AWG AND SMALLER, SOLID WIRE TYPE THW OR THHN/THWN, THHW(THHN FOR DRY LOCATION ONLY).
    b. #8 AWG TO #2 AWG, STRANDED TYPE THW OR THHN/THWN.
    c. #1 AWG AND LARGER, STRANDED TYPE XHHW.

    2. FEEDERS : TYPE THW OR THHN/THWN, OR XHHW.
26. PROVIDE GREEN INSULATED GROUNDING CONDUCTOR IN EACH RACEWAY INCLUDING CONDUITS, PLUG STRIPS, WIREMOLD. SIZE OF GROUNDING SHALL BE IN ACCORDANCE WITH NATIONAL ELECTRIC CODE ARTICLE 250.
27. WIRING METHOD SHALL BE EMT ABOVE GROUND AND MOUNTED IN CONCEALED SPACES AND SCHEDULE-40 PVC FOR UNDERGROUND INSTALLATION. USE RIGID WHEN ENCASED IN CONCRETE OR SUSCEPTIBLE TO DAMAGE.
28. CONTRACTOR TO USE THE FOLLOWING CONDUCTOR SIZES FOR BRANCH CIRCUITS:
    #10AWG CONDUCTORS FOR 20 AMPERE, 120V BRANCH CIRCUITS LONGER THAN 75 FEET.
    #10AWG CONDUCTORS FOR 20 AMPERE, 277V BRANCH CIRCUITS LONGER THAN 200 FEET.
29. PROVIDE 110V OUTLET, CFL LIGHT & SWITCH FOR LIGHT @ FAU IN ATTIC, WHERE APPLICABLE.

NOTE TO CONTRACTOR

DO NOT SCALE DRAWINGS

CONTRACTOR SHALL VERIFY PLANS AND EXISTING DIMENSIONS AND CONDITIONS ON THE JOB SITE AND SHALL IMMEDIATELY NOTIFY THE ARCHITECT IN WRITING OF ANY DISCREPANCIES BEFORE PROCEEDING WITH THE WORK OR BE RESPONSIBLE FOR THE SAME.

APPLICABLE CODES

1. 2016 BUILDING STANDARDS ADMINISTRATIVE CODE, PART 1, TITLE 24 C.C.R.
2. 2016 CALIFORNIA BUILDING CODE (CBC),PART 2, TITLE 24 C.C.R. (IBC WITH AMENDMENTS)
3. 2016 CALIFORNIA ELECTRICAL CODE (CEC), PART 3, TITLE 24 C.C.R. (NEC WITH AMENDMENTS)
4. 2016 CALIFORNIA MECHANICAL CODE (CMC), PART 4, TITLE 24 C.C.R. (UMC WITH AMENDMENTS)
5. 2016 CALIFORNIA PLUMBING CODE (CPC), PART 5, TITLE 24 C.C.R. (UPC WITH AMENDMENTS)
6. 2016 CALIFORNIA FIRE CODE, PART 9, TITLE 24 C.C.R. (FFC WITH AMENDMENTS)
7. 2016 CALIFORNIA REFERENCED STANDARDS, PART 12, TITLE 24 C.C.R.
8. 2016 TITLE 19 C.C.R., PUBLIC SAFETY, STATE FIRE MARSHAL REGULATIONS.
9. 2016 CALIFORNIA ENERGY CODE (PART 6, TITLE 24 C.C.R.)
10. 2016 CALIFORNIA GREEN BUILDING STANDARDS CODE (CGBSC), PART 11, TITLE 24 C.C.R.

SHEET INDEX

Sheet Number	Sheet Title
E-0.1	ELECTRICAL LEGENDS & NOTES
E-0.2	LUMINAIRE SCHEDULE
E-0.3	TITLE 24 COMPLIANCE DOCUMENTS
E-0.4	SINGLE LINE DIAGRAM & PANEL SCHEDULES
E-1.1	PARTIAL ELECTRICAL SITE PLAN
E-1.2	PARTIAL ELECTRICAL SITE PLAN
E-1.3	PARTIAL SITE PHOTOMETRIC PLAN
E-1.4	PARTIAL SITE PHOTOMETRIC PLAN
E-2.1	POWER & LTG FLOOR PLAN - STORAGE #1
E-3.1	ELECTRICAL DETAILS

ABBREVIATIONS

A	AMPERE
AF	AMPERE FRAME RATING (CIRCUIT BREAKER)
AFF	ABOVE FINISHED FLOOR
AFG	ABOVE FINISHED GRADE
AFU	AMPERE FUSE RATING (FUSE)
AIC	AMPERE INTERRUPTING CAPACITY
AS	AMPERE SWITCH RATING (FUSE)
AT	AMPERE TRIP RATING (CIRCUIT BREAKER)
AWG	AMERICAN WIRE GAUGE
BKBD	BACKBOARD
BLDG	BUILDING
BKR	BREAKER
C	CONDUIT
CB	CIRCUIT BREAKER
CKT	CIRCUIT
CFSD	COMBINATION FIRE SMOKE DAMPER
CO	CONDUIT ONLY
CONC	CONCRETE
CT	CURRENT TRANSFORMER
CU	COPPER
℄	CENTERLINE
DISC	DISCONNECT
DSBN	DISTRIBUTION SECTION
DN	DOWN
DWG	DRAWING
EA	EACH
EC	ELECTRICAL CONTRACTOR
EM	EMERGENCY
EMT	ELECTRICAL METALLIC TUBING
EXIST, (E)	EXISTING
EXO	EXTERNAL OPERABLE DISCONNECT
F	FUSE
FA	FIRE ALARM
FACP	FIRE ALARM CONTROL PANEL
FF	FINISHED FLOOR
FG	FINISHED GRADE
FLA	FULL LOAD CURRENT
FLUOR	FLUORESCENT
GEN	GENERATOR
GFCI	GROUND FAULT CIRCUIT INTERRUPTER
GFP	GROUND FAULT PROTECTION
GND	GROUND
HOA	HAND-OFF-AUTOMATIC
HP	HORSE POWER
HV	HIGH VOLTAGE
IDF	INTERMEDIATE DISTRIBUTION FRAME
IG	ISOLATED/INSULATED GROUND
INCAND	INCANDESCENT
ISC	SHORT CIRCUIT CURRENT AVAILABLE IN RMS SYMMETRICAL AMPERES
J-BOX	JUNCTION BOX
KCMIL	THOUSAND CIRCULAR MILS
KW	KILOWATT
KV	KILO VOLT
KVA	KILO VOLT-AMPERE
LDC	LOCAL DISTRIBUTION CABINET
LDF	LOCAL DISTRIBUTION FRAME
LCL	LONG CONTINUOUS LOAD
LTG	LIGHTING
LV	LOW VOLTAGE
MFR	MANUFACTURER
MAX	MAXIMUM
MCC	MOTOR CONTROL CENTER
MIN	MINIMUM
MH	MANHOLE / METAL HALIDE
M/M	METER AND MAIN SECTION
(E)	EXISTING DEVICE TO REMAIN
(R)	REMOVE EXISTING DEVICE AND ASSOCIATED CONDUIT AND WIRE

MULTI	MULTI-METER SECTION
MV	MEDIUM VOLTAGE
NC	NORMALLY CLOSED
NEC	NATIONAL ELECTRICAL CODE
NEMA	NATIONAL ELECTRICAL MANUFACTURER'S ASSOCIATION
NEW (N)	NEW, TO BE FURNISHED AND INSTALLED BY CONTRACTOR
NF	NON-FUSED
NIC	NOT IN CONTRACT
N/L	NIGHT LIGHT
NO	NUMBER, NORMALLY OPEN
NTS	NOT TO SCALE
OC	ON CENTER
OD	OUTSIDE DIAMETER
P	POLE
PB	PULL BOX
PF	POWER FACTOR
PNL	PANEL
POC	POINT OF CONNECTION
PP	POWER POLE
PWR	POWER
PVC	POLYVINYL CHLORIDE
QUAD	QUADRUPLEX
QTY	QUANTITY
REQD	REQUIRED
REQMT	REQUIREMENT
RGS	RIGID GALVANIZED STEEL
RMC	RIGID METALLIC CONDUIT
RM	ROOM
RNC	RIGID NONMETALLIC CONDUIT
SHT	SHEET
SN	SOLID NEUTRAL
SPEC	SPECIFICATIONS
SPDT	SINGLE POLE, DOUBLE THROW
SPST	SINGLE POLE, SINGLE THROW
SW	SWITCH
SWBD	SWITCHBOARD
TC	TIME CLOCK
TEL	TELEPHONE
TERM	TERMINAL
TP	TEMPORARY POLE
TYP	TYPICAL
UGPS	UNDERGROUND PULL SECTION
UL	UNDERWRITERS LABORATORY
UPS	UNINTERRUPTIBLE POWER SUPPLY
UON	UNLESS OTHERWISE NOTED
V	VOLT, VOLTAGE
VA	VOLT-AMPERE
VFC	VARIABLE FREQUENCY CONTROLLER
VFD	VARIABLE FREQUENCY DRIVE
W	WATT
WH	WATT-HOUR
WP	WEATHERPROOF
WT	WEATHERTIGHT
WW	WIREWAY
XP	EXPLOSION PROOF
Z	IMPEDANCE
4W	FOUR-WIRE
3W	THREE-WIRE
SS	JUNCTION BOX (4 11/16" SQUARED X2 1/8" DEEP)
'	DIAMETER, PHASE
#	NUMBER
°C	DEGREE CELSIUS
(RL)	REMOVE EXISTING DEVICE AND RELOCATE AS SHOWN ON PLAN
(NL)	NEW LOCATION OF RELOCATED DEVICE

LIGHTING LEGEND AND SYMBOLS

SYMBOL	DESCRIPTION
FN	SQUARE POLETOP LED LIGHT FIXTURE WITH ELECTRONIC DRIVER. - REFER TO LUMINAIRE SCHEDULE, TYPICAL. SUBSCRIPT FN REFERS TO FIXTURE TYPE.
	DUEL HEAD SQUARE POLETOP LED LIGHT FIXTURE WITH ELECTRONIC DRIVER. - REFER TO LUMINAIRE SCHEDULE, TYPICAL.
	POST TOP LED FIXTURE WITH ELECTRONIC DRIVER.
	FLAG POLE IN-GROUND LED FIXTURE
	4' LINEAR LED STRIP LIGHT FIXTURE.
$S3_{a,b}$	SWITCH, SINGLE POLE 20A. MOUNTED 48" A.F.F. TO TOP OF DEVICE. SUBSCRIPTS INDICATE THE FOLLOWING: M - MOTOR RATED; 3 - THREE WAY; 4 - FOUR WAY; K - KEY OPERATED; D - DIMMER SWITCH; T - TIMED SWITCH. a, b, c, ETC. - DESIGNATES SWITCH-LEGS CONTROLLED AND QUANTITY OF SWITCHES AT EACH LOCATION.
	OCCUPANCY SENSOR, DUAL-TECHNOLOGY, SURFACE CEILING MOUNTED. WATT STOPPER MODEL #DT-300 OR LEVITON MODEL #OSC20-MOW. PROVIDE WITH POWER PACK(S) AS REQUIRED.
	DUAL TECHNOLOGY OCCUPANCY SENSOR, SURFACE WALL MOUNTED 180° U.O.N. LEVITON MODEL #OSSMT-GD (FOR SINGLE POLE SWITCHING) & LEVITON MODEL #OSSMD-GD FOR (DUAL SWITCHING)

LIGHT POLE STRUCTURAL CALCULATION SHALL BE A DEFERRED SUBMITTAL. CONTRACTOR SHALL SUBMIT STRUCTURAL CALCULATIONS FOR CITY APPROVAL AND OBTAIN APPROPRIATE BUILDING PERMIT.

POWER LEGEND AND SYMBOLS

SYMBOL	DESCRIPTION
	DUPLEX RECEPTACLE OUTLET, CONVENIENCE. (20 AMPS, 125 VOLTS) MOUNTED +15" A.F.F. TO BOTTOM OF DEVICE U.O.N.
	DOUBLE DUPLEX RECEPTACLE OUTLET, CONVENIENCE. (20 AMPS, 125 VOLTS) MOUNTED +15" A.F.F. TO BOTTOM OF DEVICE U.O.N.
	DUPLEX RECEPTACLE OUTLET, CONVENIENCE. (20 AMPS, 125 VOLTS, GFCI TYPE) MOUNTED +15" A.F.F. TO BOTTOM OF DEVICE U.O.N.
	DUPLEX RECEPTACLE OUTLET, CONVENIENCE. (20 AMPS, 125 VOLTS) WITH MOUNTING HEIGHT HORIZONTALLY ABOVE COUNTER TOP PER ARCHITECTURAL PLANS OR APPROVAL.
	DUPLEX RECEPTACLE OUTLET, CONVENIENCE. (20 AMPS, 125 VOLTS, GFCI TYPE) WITH MOUNTING HEIGHT HORIZONTALLY ABOVE COUNTER TOP PER ARCHITECTURAL PLANS OR APPROVAL.
WP	WEATHERPROOF DUPLEX RECEPTACLE OUTLET, CONVENIENCE. (20 AMPS, 125 VOLTS) MOUNTED +15" A.F.F. TO BOTTOM OF DEVICE U.O.N.
	DUPLEX RECEPTACLE OUTLET, SINGLE SPLIT-CIRCUIT SWITCHED. (20 AMPS, 125 VOLTS) MOUNTED +15" A.F.F. TO BOTTOM OF DEVICE U.O.N.
	SURFACE MOUNTED DUPLEX RECEPTACLE OUTLET, CONVENIENCE. (20 AMPS, 125 VOLTS) MOUNTED +15" A.F.F. TO BOTTOM OF DEVICE U.O.N.
	RECESSED CEILING MOUNTED DUPLEX RECEPTACLE OUTLET, CONVENIENCE. (20 AMPS, 125 VOLTS) U.O.N.
	ABOVE CEILING, CONCEALED, JUNCTION BOX, WITH COVER, PER NATIONAL ELECTRICAL CODE (NEC) TABLE 314.16(A)/(B). 4" SQUARE DEEP, WITH PLASTER RING.
CH	RECESSED WALL MOUNTED JUNCTION BOX, WITH COVER, PER NATIONAL ELECTRICAL CODE (NEC) TABLE 314.16(A)/(B). 4" SQUARE DEEP, WITH PLASTER RING.
	DUPLEX RECEPTACLE, FLUSH IN FLOOR, WATERTIGHT JUNCTION BOX (HINGED BRASS COVER: 20 AMP, 120 VOLT, 2-POLE, 3-WIRE) U.O.N.
	DOUBLE DUPLEX RECEPTACLE, FLUSH IN FLOOR, WATERTIGHT JUNCTION BOX (20 AMP, 120 VOLT, 2-POLE, 3-WIRE) U.O.N.
	JUNCTION BOX, FLUSH IN FLOOR, WATERTIGHT (HINGED BRASS COVER: 20 AMP, 120 VOLT, 2-POLE, 3-WIRE) U.O.N.
L5-30R	SPECIALTY OUTLET. VERIFY NEMA CONFIGURATION AS NOTED ON PLANS.
OR	BRANCH PANELBOARD, WALL MOUNTED, SEE PLANS AND SCHEDULE. (SURFACE MOUNTED)
	BRANCH PANELBOARD, WALL MOUNTED, SEE PLANS AND SCHEDULE. (RECESSED MOUNTED)
	MAIN SWITCHBOARD, POWER OR LIGHT, FLOOR STANDING ENCLOSURE, (SEE SINGLE LINE DIAGRAM AND LOAD SUMMARY)
	DISCONNECT SWITCH H.P. RATED 600 VOLTS RATED. "F" INDICATES FUSE TYPE. FUSES PER APPROVED MANUFACTURERS SHOP DRAWINGS.
F2	MAGNETIC MOTOR STARTER H.P. RATED (NUMBER INDICATES NEMA SIZE)
+96" OR 1'-6" AFF	MOUNTING HEIGHT FROM FINISHED FLOOR TO BOTTOM LINE OF OUTLET OR EQUIPMENT. FOR LIGHT FIXTURES, IT IS TO BOTTOM OF FIXTURE.
	CONDUIT TURNED DOWN
	CONDUIT TURNED UP
	CONDUIT STUBBED AND CAPPED
	RACEWAY CONCEALED IN WALLS OR ABOVE CEILING
	CONDUIT CONCEALED IN OR UNDER FLOOR, COORDINATE WITH G.C.; OR, BURIAL CONDUIT UNDERGROUND IN SCHEDULE - 40 PVC UNLESS NOTED OTHERWISE. VERIFY DEPTH AND TRENCHING WITH G.C.
DETAIL No. / SHEET No.	DETAIL REFERENCE
EQUIPMENT ID. No.	EQUIPMENT REFERENCE
(E)	EXISTING CONDUIT AND WIRING TO REMAIN
(R)	PULL-OUT WIRES AND ABANDON CONDUIT. CUT AND CAPPED FLUSH WALL OR SLAB.
E	EXISTING CONDUIT TO REMAIN
R	EXISTING CONDUIT AND WIRE TO BE REMOVED
PR	ELECTRICAL UTILITY PRIMARY
SC	ELECTRICAL UTILITY SECONDARY
T	UTILITY TELEPHONE
OH	TEMPORARY OVERHEAD CABLING
A-1,3	HOMERUN TO CIRCUITS #1 AND #3 IN PANEL "A". (CROSSMARKS INDICATE NUMBER OF PHASES AND NEUTRAL. PROVIDE GROUND WIRE.)
	3/4" CONDUIT WITH 2 #12 & 1 #12 GND WIRES UON
	3/4" CONDUIT WITH 3 #12 & 1 #12 GND WIRES UON
	3/4" CONDUIT WITH 4 #12 & 1 #12 GND WIRES UON
	3/4" CONDUIT WITH 5 #12 & 1 #12 GND WIRES UON
#10	3/4" CONDUIT WITH 2 #10 & 1 #10 GND WIRES (#10 INDICATING WIRE SIZE)
#10	3/4" CONDUIT WITH 3 #10 & 1 #10 GND WIRES (#10 INDICATING WIRE SIZE)
#10	3/4" CONDUIT WITH 4 #10 & 1 #10 GND WIRES (#10 INDICATING WIRE SIZE)
#10	3/4" CONDUIT WITH 5 #10 & 1 #10 GND WIRES (#10 INDICATING WIRE SIZE)
#10	1" CONDUIT WITH 6 #10 & 1 #10 GND WIRES (#10 INDICATING WIRE SIZE)
	CONCEALED IN WALL OR CEILING
	GROUND WELL
	EXISTING (DASH INDICATES) ELECTRICAL EQUIPMENT
	TELEPHONE BACKBOARD 2'X4'X3/4" PLYWOOD. PROVIDE 2" CONDUIT TO TELEPHONE POC.
	MOLDED CASE CIRCUIT BREAKER
	SWITCH AND FUSE ASSEMBLY
	UTILITY COMPANY PULL SECTION LUGS
	GROUNDING CONNECTION TO MAIN BUILDING GROUND SYSTEM U.O.N.
N G	GROUNDING CONNECTION AT SWITCHGEAR/DISTRIBUTION BOARD WITH NEUTRAL BONDING.
M	IN-LINE UTILITY COMPANY METER
M	UTILITY METER WITH CIRCUIT TRANSFORMERS (CT'S) METER
SS	SOLID STATE DEVICE CONNECTED TO THE POWER DISTRIBUTION SYSTEM
GFP	GROUND FAULT PROTECTION DEVICE CONNECTED TO THE POWER DISTRIBUTION SYSTEM
T OR	TRANSFORMER WITH SECONDARY GROUND
200-B	CONDUIT WIRING DESCRIPTION PER FEEDER SCHEDULE ON OTHER PLAN
200-Y	CONDUIT WIRING DESCRIPTION PER FEEDER SCHEDULE ON OTHER PLAN
PB	CONCRETE ELECTRICAL PULL BOX WITH LID APPROPRIATE FOR INSTALLATION LOCATION. LID SHALL BE LABELED "ELECTRICAL" OR "COMM" ACCORDING TO USE.

Landscape Architect:

David Volz Design
Landscape Architecture & Park Planning

Costa Mesa Office:
151 Kalmus Drive, Suite M8
Costa Mesa, CA 92626
Phone: (714) 641-1300
Fax: (714) 641-1323

e-mail: drawings@dvolzdesign.com
www.dvolzdesign.com

Subconsultant:

275 W. Hospitality Lane, Suite #100
San Bernardino, CA 92408
Phone: 909-890-3700
Fax: 909-890-3770
Email: cadd@designwesteng.com

DESIGN WEST ENGINEERING
MECHANICAL • ELECTRICAL • ENERGY CONSULTANTS

Seal:

REGISTERED PROFESSIONAL ENGINEER
LEONARD P. MAYER
No. E19480
EXP. 6-30-2023
ELECTRICAL
STATE OF CALIFORNIA

1-800-422-4133
DIGALERT
UNDERGROUND SERVICE ALERT

UNDERGROUND SERVICE ALERT OF SOUTHERN CALIFORNIA

ATTENTION IS DIRECTED TO THE POSSIBLE EXISTENCE OF UNDERGROUND FACILITIES NOT KNOWN OR IN A LOCATION DIFFERENT FROM THAT ANTICIPATED BY THE ENGINEER. IN THE SPECIAL PROVISIONS THE CONTRACTOR SHALL TAKE STEPS TO ASCERTAIN THE EXACT LOCATION OF ALL UNDERGROUND FACILITIES PRIOR TO DOING WORK THAT MAY DAMAGE SUCH FACILITIES OR INTERFERE WITH THEIR SERVICE.

BEFORE EXCAVATING, THE CONTRACTOR SHALL VERIFY THE LOCATION OF UNDERGROUND UTILITIES BY CONTRACTING UNDERGROUND SERVICE ALERT AT 1-800(422-4133).

Revisions:

No.	Date	Revisions	By

Project :

JACK HAMMETT SPORTS COMPLEX
2750 Fairview Rd.

Owner:

City of Costa Mesa

Project No :	
Drawn By :	RM
Checked By :	RM
Date :	FEB 2019
Scale :	AS SHOWN

Drawing Title :

ELECTRICAL LEGENDS & NOTES

Drawing No :

E-0.1

19-249

R:_PROJECT\2019\19-249 JACK HAMMET SPORTS PARK\16-209 E-FINISHT - 2021-09-28 - LONNIE BUTLER

LUMINAIRE SCHEDULE

TYPE	VOLTS	WATTS/LUMENS	LAMPS	MOUNTING	FIXTURE DESCRIPTION	MANU.	CATALOG #	NOTES	SYMBOL	BUG RATINGS
F1	120	33/3894	LED 4000K	CHAIN	4' LINEAR LED STRIP FIXTURE WITH 0-10V DIMMING DRIVER	LITHONIA	ZL1D-L48-3000LM-FST -MVOLT-40K-80CRI- WH-HC36	PROVIDE WITH 36" CHAIN		N/A
F4	120	18/1863	LED 4000K	WALL	VANDAL PROOF WALL MOUNTED LED FIXTURE WITH PHOTOCELL CONTROL. FIXTURE TO BE MOUNTED 8' A.F.G.	KENALL	M013CL-PP-DB- 20L40K-SCC-DV	** - COORDINATE COLOR OF FINISH WITH ARCHITECT		SEE NOTE #4
S1	277	217/28255	LED 4000K	POLETOP	SQUARE POLETOP LED LIGHT FIXTURE WITH ELECTRONIC DRIVER. FIXTURE TO BE MOUNTED AT 25'-0" A.F.G. PROVIDE WITH INTEGRAL MOTION SENSOR.	LITHONIA	DSX2-LED-P3-40K-TFTM- 277-SPA-PIRH-HS-DDBXD	POLE: SSS-25-5C- DM19AS-DDBXD		B=3 U=0 U=4
S2	277	434/56510	LED 4000K	POLETOP	DUEL HEAD SQUARE POLETOP LED LIGHT FIXTURE WITH ELECTRONIC DRIVER. FIXTURE TO BE MOUNTED AT 25'-0" A.F.G. PROVIDE WITH INTEGRAL MOTION SENSOR.	LITHONIA	DSX2-LED-P3-40K-TFTM- 277-SPA-PIRH-DDBXD	POLE: SSS-25-5C- DM28AS-DDBXD		B=3 U=0 U=4
S3	277	75/6537	LED 4000K	POST TOP	POST TOP LED FIXTURE WITH ELECTRONIC DRIVER. FIXTURE TO BE MOUNTED 12' A.F.G. CONFIRM COLOR OF FINISH WITH OWNER PRIOR TO ORDERING.	LITHONIA	MRP-LED-42C-530-40K- SR4-277-DDBXD	POLE: SSS-12-5C- DM19AS-DDBXD		B=1 U=1 U=2
S4	277	16/1001	LED 4000K	IN-GRADE	FLAG POLE IN-GROUND LED FIXTURE WITH 11° SPOT DISTRIBUTION.	TARGETTI	KPLM-ND-FH-SP-L2- 40-1E2525-1DU2521- IDU2530			SEE NOTE #4
S5	277	53/5380	LED 4000K	IN-GRADE	LINEAR IN-GROUND LED FIXTURE WITH FLOOD OPTICS.	TARGETTI	JE-C-O-ND-FL-48-40- S-LV-1E3306-S			SEE NOTE #4

EQUALS SHALL BE CONSIDERED UPON SUBMITTAL REVIEW AND APPROVAL. PLEASE NOTE THAT IF AN ALTERNATE IS CONSIDERED:

1. THE CONTRACTOR IS COMPLETELY AND SOLELY RESPONSIBLE FOR ALL ASPECTS OF THE SUBSTITUTION INCLUDING UPDATING CONSTRUCTION DOCUMENTS, OBTAINING APPROVALS AND PERMITS FROM LOCAL AUTHORITY, AND COORDINATING WITH ALL TRADES TO ENSURE CHANGES TO AFFECTED BUILDING SYSTEM ARE ACCOUNTED FOR AND ACCEPTABLE TO THE ENGINEERING TEAM. CONTRACTOR SHALL ENSURE SUBSTITUTED EQUIPMENT MEETS OR EXCEEDS DESIGN INTENT REGARDING RATINGS, PERFORMANCE, DIMENSIONAL CLEARANCES, PHYSICAL DIMENSIONS (MAX/MIN), WEIGHT LIMITATIONS, AND OTHER ASPECTS, PROVING SUBSTITUTION IS SUITABLE TO THE APPLICATION. ENGINEERS WILL REVIEW THE RATING AND PERFORMANCE OF SUBSTITUTED EQUIPMENT ONLY AND WILL NOT ASSUME RESPONSIBILITY FOR SUBSTITUTION AT ANY LEVEL.
2. IF CONTRACTOR CANNOT MAKE SUBSTITUTED EQUIPMENT WORK IN THIS PROJECT, CONTRACTOR SHALL REVERT TO REQUIREMENTS OF PERMITTED CONSTRUCTION DOCUMENTS AT THEIR EXPENSE.
3. IT IS UNDERSTOOD BY ALL PARTIES THAT ANY SUBSTITUTIONS OF SPECIFIED PRODUCTS ARE DONE FOR THE PURPOSE OF COST SAVINGS TO THE OWNER. THEREFORE, ANY MATERIAL SUBSTITUTION OR DEVIATIONS PROPOSED BY THE CONTRACTOR SHALL BE INCLUDED WITH THE INITIAL BID AND SHALL SHOW A LINE ITEMS CREDIT TO THE OWNER FOR EACH SUBSTITUTION IN LIEU OF SPECIFIED PRODUCTS.
4. PER SECTION 5.106.8 EXCEPTION 3, FIXTURES ARE EXEMPT DUE TO BEING UNDER 6200 LUMENS.

LUMINAIRE SCHEDULE NOTES

1. THE FIXTURE SCHEDULE INDICATES GENERAL DESCRIPTION OF LIGHTING FIXTURES AND MANUFACTURERS CATALOG NUMBERS. IT SHALL BE THE CONTRACTORS RESPONSIBILITY TO DETERMINE THE CORRECT CEILING CONFIGURATION AND PROVIDE THE FIXTURES WITH ALL NECESSARY TRIMS AND MOUNTING HARDWARE SO THAT BOTH THE CEILING SYSTEM AND THE FIXTURE CONSTRUCTION MATCHES. PROVIDE SEISMIC HANGERS AS REQUIRED.
2. IT SHALL BE CONTRACTORS RESPONSIBILITY TO VERIFY THE EXACT LOCATION OF ALL LIGHTING FIXTURES AND TYPE OF CEILING WITH ARCHITECTURAL REFLECTED CEILING PLAN PRIOR TO ANY WORK. SEE ARCHITECTURAL REFLECTED CEILING PLAN PRIOR TO ANY WORK. SEE ARCHITECTURAL ELEVATION DRAWING FOR MOUNTING HEIGHTS OF WALL MOUNTED FIXTURES.
3. A JUNCTION BOX MUST BE PROVIDED WITH ALL EXIT LIGHTS CONNECTED TO MORE THAN ONE SET OF CONDUCTORS UNLESS THE EXIT LIGHT FIXTURE IS FURNISHED WITH AN APPROVED OUTLET BOX FOR THROUGH WIRING.
4. LIGHTING FIXTURE WIRING FOR ROOMS CONTROLLED BY MORE THAN ONE LIGHT SWITCH SHALL BE ARRANGED SO THAT THE OUTSIDE LAMPS ON EACH FIXTURE ARE CONTROLLED BY ONE SWITCH AND THE INSIDE LAMPS BY THE OTHER TO PROVIDE MULTI-LEVELS OF ILLUMINATION.
5. BATTERY PACK EMERGENCY TEST SWITCHES SHALL BE INTEGRAL TO LIGHT FIXTURE. COORDINATION OF SWITCH LOCATION IS REQUIRED WITH DESIGN TEAM IF INTEGRAL INSTALLATION IS NOT POSSIBLE.
6. FIXTURES DESIGNATED AS EMERGENCY SHALL BE SUPPLIED WITH INTEGRAL BATTERY PACK CAPABLE OF POWERING TWO T8 LAMPS FOR 90 MINUTES WITH A TOTAL LIGHT OUTPUT OF 1100 LUMENS OR ONE F13 BIAX FOR 90 MINUTES WITH A TOTAL LIGHT OUTPUT OF 520 LUMENS.
7. PROVIDE ALL REQUIRED MOUNTING HARDWARE ANCHORAGE AND SUPPORTS TO INSTALL LIGHTING FIXTURES.
8. PROVIDE SWIVEL BASE AND STEMS. LENGTHS AS REQUIRED TO MOUNT THE PENDANT MOUNTED FIXTURES. THE INSTALLATION SHALL COMPLY WITH TITLE 24 SEISMIC AND APPLICABLE UBC REQUIREMENTS.
9. THE CONTRACTOR SHALL PROVIDE A COMPLETE AND OPERABLE LIGHTING SYSTEM AS PART OF THIS BUILDING CONTRACT.
10. SUSPENSION SYSTEM FOR LIGHT FIXTURES WHICH HAVE PASSED SHAKING TABLE TESTS APPROVED BY THE OFFICE OF THE STATE OF ARCHITECT, OR WHICH, AS INSTALLED, ARE FREE TO SWING A MINIMUM OF 45' FROM THE VERTICAL IN ALL DIRECTIONS WITHOUT CONTACTING OBSTRUCTIONS. SHALL BE ASSUMED TO COMPLY WITH THE LATERAL FORCE REQUIREMENTS FOR SECTION 2305, PART 2, TITLE 24, CCR. UNLESS OF THE CABLE TYPE FREE SWING SUSPENSION SYSTEM SHALL HAVE A SAFETY WIRE OR CABLE ATTACHED TO THE FIXTURE AND STRUCTURE AT EACH SUPPORT CAPABLE OF SUPPORTING FOUR TIMES THE SUPPORTED LOAD.
11. FOR SUSPENDED AND SURFACE MOUNTED LIGHT FIXTURES, THE PRODUCT OF ICP NEED NOT EXCEED 12 FOR ANY VALUE OF 1.
12. LED LIGHT FIXTURES SHALL BE IN ACCORDANCE WITH IES, NFPA, UL, AS SHOWN ON THE DRAWINGS, AND AS SPECIFIED.
13. LED LIGHT FIXTURES SHALL BE REDUCTION OF HAZARDOUS SUBSTANCES (ROHS)-COMPLIANT.
14. LED DRIVERS SHALL INCLUDE THE FOLLOWING FEATURES UNLESS OTHERWISE INDICATED:
    - MINIMUM EFFICIENCY: 85% AT FULL LOAD.
    - MINIMUM OPERATING AMBIENT TEMPERATURE: -20 DEG C. (-4 DEG F.)
    - INPUT VOLTAGE: 120 - 277V (±10%) AT 60 HZ.
    - INTEGRAL SHORT CIRCUIT, OPEN CIRCUIT, AND OVERLOAD PROTECTION.
    - POWER FACTOR: >=0.95.
    - TOTAL HARMONIC DISTORTION: <=20%.
    - COMPLY WITH FCC 47 CFR PART 15.
15. LED MODULES SHALL INCLUDE THE FOLLOWING FEATURES UNLESS OTHERWISE INDICATED:
    - COMPLY WITH IES LM-79 AND LM-80 REQUIREMENTS.
    - MINIMUM CRI 80 AND COLOR TEMPERATURE 4000K UNLESS OTHERWISE SPECIFIED IN LUMINAIRE SCHEDULE.
    - MINIMUM RATED LIFE: 50,000 HOURS PER IES L70.
    - LIGHT OUTPUT LUMENS AS INDICATED IN THE LUMINAIRE SCHEDULE.
16. LED DOWNLIGHTS:
    - HOUSING, LED DRIVER, AND LED MODULE SHALL BE PRODUCTS OF THE SAME MANUFACTURER.
17. LED TROFFERS:
    - LED DRIVERS, MODULES, AND REFLECTOR SHALL BE ACCESSIBLE, SERVICEABLE, AND REPLACEABLE FROM BELOW THE CEILING.
    - HOUSING, LED DRIVER, AND LED MODULE SHALL BE PRODUCTS OF THE SAME MANUFACTURER.

STATE OF CALIFORNIA
Sign Lighting
NRCC-LTS-E (Created 9/17) — CALIFORNIA ENERGY COMMISSION

CERTIFICATE OF COMPLIANCE			NRCC-LTS-E
Project Name:	Jack Hammet Sports Complex	Report Page:	Page 2 of 4
Project Address:	2750 Fairview Rd.	Date Prepared:	11/15/2019

D. EXCEPTIONAL CONDITIONS
This table is auto-filled with uneditable comments because of selections made or data entered in tables throughout the form.

No exceptional conditions apply to this project.

E. ADDITIONAL REMARKS
This table includes remarks made by the permit applicant to the Authority Having Jurisdiction.

F. MAXIMUM ALLOWED LIGHTING POWER AND CONTROLS
Table Instructions: Complete this table for illuminated signs using the Maximum Allowed Lighting Power compliance method per §140.8(a) as indicated on Table B of this compliance document. Also demonstrate compliance with mandatory controls requirements from §130.3 by indicating control types for each sign.

01	02	03	04	05	06	07	08			09	
Name or Item Tag	Complete Sign Description	Illumination Method	Sign Area (ft^2)	Allowed Density (W/ft^2)	Allowance (Watts)	Design Watts	Mandatory Controls			Field Inspector	
							Shut-Off	Dimming	Demand Response[1]	Pass	Fail
S5	Entrance Sign	Externally	36	2.3	82.8	53	Auto Timer	NA	NA	☐	☐
		10	11			12	13	14			
		Luminaire Name or Item Tag	Complete Luminaire Description			Watts per Luminaire	How Wattage is Determined	Total number luminaires			
		S5	S5			53	Mfr. Spec	1			

**NOTE: Controls with a * require a note in the space below explaining how compliance is achieved.*
EX: Sign within tunnel illuminated day & night; EXCEPTION to §130.3(a)2A.

[1]FOOTNOTE: Demand response controls are only required for an Electronic Message Center having a new connected lighting power load greater than 15 kW per §130.3(a)3.

G. LIGHT SOURCES AND CONTROLS
This Section Does Not Apply

STATE OF CALIFORNIA
Sign Lighting
NRCC-LTS-E (Created 9/17) — CALIFORNIA ENERGY COMMISSION

CERTIFICATE OF COMPLIANCE — NRCC-LTS-E

This document is used to demonstrate compliance with requirements in §110.9, §130.0, §130.3, §140.8, and §141.0(b)2M for sign lighting scopes using the prescriptive path. Exit signs and traffic signs are not required to comply with prescriptive requirements per exceptions to §140.8 and do not need to complete this compliance document.

Project Name:	Jack Hammet Sports Complex	Report Page:	Page 1 of 4
Project Address:	2750 Fairview Rd.	Date Prepared:	11/15/2019

A. GENERAL INFORMATION

01	Project Location (city)	Costa Mesa
02	Climate Zone	6

B. PROJECT SCOPE
Table Instructions: Include any illuminated signs that are within the scope of the permit application and are demonstrating compliance using the prescriptive path outlined in §140.8 or §141.0(b)2M for alterations. Exit signs and traffic signs are not required to comply with prescriptive requirements per exceptions to §140.8 and do not need to complete this compliance document. WARNING: Changing the Compliance Method in this table will result in the deletion of data previously input. If you need to change the compliance method, please open a new form or use "Save As".

01	02	03	04	05
Name or Item Tag	Complete Sign Description	Sign Status[1]	Location	Compliance Method[2]
S5	Entrance Sign	New	Outdoor	Max Allowed Lighting Power

[1]FOOTNOTE: Sign alterations that increase the connected lighting load, replace and rewire more than 50% of the ballasts, or relocate the sign to a different location must comply with §140.8. See §141.0(b)2M for more details.
[2]The ENERGY VERIFIED Label compliance method is only applicable if the sign has a permanent, factory-installed, ENERGY VERIFIED label certified by UL or comparable, confirming the sign complies with §140.8. Note that using an ENERGY VERIFIED label is an optional compliance path, not a mandatory requirement. See the tool tips for this table for more details.

C. COMPLIANCE RESULTS
Table Instructions: If any cell on this table says "DOES NOT COMPLY" or "COMPLIES with Exceptional Conditions" refer to Table D. for guidance.

01	02	03		04		05		06	07
Name or Item Tag	Complete Sign Description	Total Allowed (Watts)	≥	Total Designed (Watts)	OR	Compliant Light Sources	OR	ENERGY VERIFIED Label	**Compliance Results**
(See Table B)	(See Table B)	(See Table F)		(See Table F)		(See Table G)		(See Table B)	
S5	Entrance Sign	82.8	≥	53	OR		OR		**COMPLIES**
								Controls Compliance (See Table F/G/H for Details)	**COMPLIES**

STATE OF CALIFORNIA
Sign Lighting
NRCC-LTS-E (Created 9/17) — CALIFORNIA ENERGY COMMISSION

CERTIFICATE OF COMPLIANCE			NRCC-LTS-E
Project Name:	Jack Hammet Sports Complex	Report Page:	Page 3 of 4
Project Address:	2750 Fairview Rd.	Date Prepared:	11/15/2019

H. ENERGY VERIFIED LABELED SIGNS AND CONTROLS
This Section Does Not Apply

I. DECLARATION OF REQUIRED CERTIFICATES OF INSTALLATION
Table Instructions: Selections have been made based on information provided in previous tables of this document. If any selection needs to be changed, please explain why in Table E. Additional Remarks. These documents must be provided to the building inspector during construction and can be found online at http://www.energy.ca.gov/2015publications/CEC-400-2015-033/appendices/forms/NRCI

YES	NO	Form/Title	Field Inspector Pass	Field Inspector Fail
◉	○	NRCI-LTS-01-E - Must be submitted for all buildings.	☐	☐

J. DECLARATION OF REQUIRED CERTIFICATES OF ACCEPTANCE
There are no Certificates of Acceptance applicable to sign lighting requirements.

STATE OF CALIFORNIA
Sign Lighting
NRCC-LTS-E (Created 9/17) — CALIFORNIA ENERGY COMMISSION

CERTIFICATE OF COMPLIANCE			NRCC-LTS-E
Project Name:	Jack Hammet Sports Complex	Report Page:	Page 4 of 4
Project Address:	2750 Fairview Rd.	Date Prepared:	11/15/2019

DOCUMENTATION AUTHOR'S DECLARATION STATEMENT

Documentation Author Name:	Leonard Maya	Documentation Author Signature:	[signature]
Company:	Design West Engineering	Signature Date:	11/15/2019
Address:	275 W. Hospitality Lane, Suite #100	CEA/ HERS Certification Identification (if applicable):	E19480
City/State/Zip:	San Bernardino, CA 92408	Phone:	909-890-3700

RESPONSIBLE PERSON'S DECLARATION STATEMENT

I certify the following under penalty of perjury, under the laws of the State of California:

1. **The information provided on this Certificate of Compliance is true and correct.**
2. **I am eligible under Division 3 of the Business and Professions Code to accept responsibility for the building design or system design identified on this Certificate of Compliance (responsible designer)**
3. **The energy features and performance specifications, materials, components, and manufactured devices for the building design or system design identified on this Certificate of Compliance conform to the requirements of Title 24, Part 1 and Part 6 of the California Code of Regulations.**
4. **The building design features or system design features identified on this Certificate of Compliance are consistent with the information provided on other applicable compliance documents, worksheets, calculations, plans and specifications submitted to the enforcement agency for approval with this building permit application.**
5. **I will ensure that a completed signed copy of this Certificate of Compliance shall be made available with the building permit(s) issued for the building, and made available to the enforcement agency for all applicable inspections. I understand that a completed signed copy of this Certificate of Compliance is required to be included with the documentation the builder provides to the building owner at occupancy.**

Responsible Designer Name:	Leonard Maya	Responsible Designer Signature:	[signature]
Company :	Design West Engineering	Date Signed:	11/15/2019
Address:	275 W. Hospitality Lane, Suite #100	License:	E19480
City/State/Zip:	San Bernardino, CA 92408	Phone:	909-890-3700

TITLE 24 COMPLIANCE DOCUMENTS | 1

Landscape Architect:
David Volz Design
Landscape Architecture & Park Planning
Costa Mesa Office:
151 Kalmus Drive, Suite M8
Costa Mesa, CA 92626
Phone: (714) 641-1300
Fax: (714) 641-1323
e-mail: drawings@dvolzdesign.com
www.dvolzdesign.com

Subconsultant:
275 W. Hospitality Lane, Suite #100
San Bernardino, CA 92408
Phone: 909-890-3700
Fax: 909-890-3770
Email: cadd@designwesteng.com
DESIGN WEST ENGINEERING
MECHANICAL • ELECTRICAL • ENERGY CONSULTANTS

Seal:
REGISTERED PROFESSIONAL ENGINEER — LEONARD P. MAYA — No. E19480 — EXP. 6-30-2023 — ELECTRICAL — STATE OF CALIFORNIA

1-800-422-4133
DIGALERT
UNDERGROUND SERVICE ALERT OF SOUTHERN CALIFORNIA
ATTENTION IS DIRECTED TO THE POSSIBLE EXISTENCE OF UNDERGROUND FACILITIES NOT KNOWN OR IN A LOCATION DIFFERENT FROM THAT WHICH IS SHOWN ON THE PLANS OR IN THE SPECIAL PROVISIONS. THE CONTRACTOR SHALL TAKE STEPS TO ASCERTAIN THE EXACT LOCATION OF ALL UNDERGROUND FACILITIES PRIOR TO DOING WORK THAT MAY DAMAGE SUCH FACILITIES OR INTERFERE WITH THEIR SERVICE.
BEFORE EXCAVATING, THE CONTRACTOR SHALL VERIFY THE LOCATION OF UNDERGROUND UTILITIES BY CONTRACTING UNDERGROUND SERVICE ALERT AT 1-(800)-422-4133.

Revisions:

No.	Date	Revisions	By

Project :
JACK HAMMETT SPORTS COMPLEX
2750 Fairview Rd.
Owner:
City of Costa Mesa

Project No :	
Drawn By :	RM
Checked By :	RM
Date :	FEB 2019
Scale :	AS SHOWN

Drawing Title :
LUMINAIRE SCHEDULE

Drawing No :
E-0.2

SHEET 33 OF 41
19-249

R:_PROJECT\2019\19-249 JACK HAMMET SPORTS PARK\16-209 E-LUMSCH - 2021-09-28 - LONNIE BUTLER

STATE OF CALIFORNIA
Indoor Lighting
NRCC-LTI-E (Created 7/18) — CALIFORNIA ENERGY COMMISSION

CERTIFICATE OF COMPLIANCE		NRCC-LTI-E
Project Name: Jack Hammet Sports Complex	Report Page:	Page 4 of 6
Project Address: 2750 Fairview Rd.	Date Prepared:	11/15/2019

N. ADDITIONAL LIGHTING ALLOWANCE: TAILORED WALL DISPLAY
This Section Does Not Apply

O. ADDITIONAL LIGHTING ALLOWANCE: TAILORED FLOOR AND TASK LIGHTING
This Section Does Not Apply

P. ADDITIONAL LIGHTING ALLOWANCE: TAILORED ORNAMENTAL/SPECIAL EFFECTS
This Section Does Not Apply

Q. ADDITIONAL LIGHTING ALLOWANCE: TAILORED VERY VALUABLE MERCHANDISE
This Section Does Not Apply

R. POWER ADJUSTMENT: LIGHTING CONTROL CREDIT (PAF)
This Section Does Not Apply

S. RATED POWER REDUCTION COMPLIANCE BY SPACE
This Section Does Not Apply

STATE OF CALIFORNIA
Indoor Lighting
NRCC-LTI-E (Created 7/18) — CALIFORNIA ENERGY COMMISSION

CERTIFICATE OF COMPLIANCE		NRCC-LTI-E
Project Name: Jack Hammet Sports Complex	Report Page:	Page 3 of 6
Project Address: 2750 Fairview Rd.	Date Prepared:	11/15/2019

04	05	06	07	08	09	10	11	12	
Area Description	Complete Building or Area Category Primary Function Area	Area Controls §130.1(a)	Multi-Level Controls §130.1(b)	Shut-Off Controls §130.1(c)	Primary/Skylit Daylighting §130.1(d)	Secondary Daylighting §140.6(d)	Interlocked Systems §140.6(a)1	Field Inspector Pass	Fail
Storage	Commercial, Industrial Storage	Manual ON/OFF	Exempt *	Occ Sensor	N/A	N/A	☐	☐	☐

*NOTES: Controls with a * require a note in the space below explaining how compliance is achieved.
EX: Conference 1: Primary/Skylight Daylighting: Exempt because less than 120 watts of general lighting; EXCEPTION 1 to §130.1(d)2
Storage Not Required

13 — Plan Sheet Showing Daylit Zones:

I. LIGHTING POWER ALLOWANCE: COMPLETE BUILDING OR AREA CATEGORY METHODS
Table Instructions: Complete the table for each area complying using the Complete Building or Area Category Methods per §140.6(b). Indicate if additional lighting power allowances per §140.6(c) or adjustments per §140.6(a) are being used.

Conditioned Spaces

01	02	03	04	05	06		
Area Description	Complete Building or Area Category Primary Function Area	Allowed Density (W/ft²)	Area (ft²)	Allowed Wattage (Watts)	Additional Allowances / Adjustments: Footnotes	PAF	Portable Ltg
Storage	Commercial and Industrial Storage	0.6	1,349	809.4	☐	☐	☐
		TOTAL:	1,349	809.4	See Tables J, K, R for detail		

J. POWER ADJUSTMENT: PORTABLE LIGHTING IN OFFICES
This Section Does Not Apply

K. ADDITIONAL LIGHTING ALLOWANCE: AREA CATEGORY METHOD FOOTNOTES
This Section Does Not Apply

L. TAILORED METHOD GENERAL LIGHTING POWER ALLOWANCE
This Section Does Not Apply

M. ADDITIONAL LIGHTING ALLOWANCE: TAILORED SPECIAL FUNCTION AREAS
This Section Does Not Apply

STATE OF CALIFORNIA
Indoor Lighting
NRCC-LTI-E (Created 7/18) — CALIFORNIA ENERGY COMMISSION

CERTIFICATE OF COMPLIANCE		NRCC-LTI-E
Project Name: Jack Hammet Sports Complex	Report Page:	Page 2 of 6
Project Address: 2750 Fairview Rd.	Date Prepared:	11/15/2019

D. EXCEPTIONAL CONDITIONS
This table is auto-filled with uneditable comments because of selections made or data entered in tables throughout the form.

Table H. Indoor Lighting Controls Permit Applicant Notes:
Storage: Not Required

E. ADDITIONAL REMARKS
This table includes remarks made by the permit applicant to the Authority Having Jurisdiction.

F. INDOOR LIGHTING FIXTURE SCHEDULE
Table Instructions: Include all permanent designed lighting and all portable lighting in offices.

01	02	03		04	05	06	07	08	09	
Name or Item Tag	Complete Luminaire Description	Specialized Luminaire Types: Track	Portable	Watts per luminaire[1]	How Wattage is determined	Total number luminaires	Exempt per §140.6(a)3	Design Watts	Field Inspector Pass	Fail
F1/F1E	33W 4' LED Linear Fixture F1	☐	☐	33	Mfr. Spec[1]	20	☐	660	☐	☐
							Total Designed Watts CONDITIONED SPACES:	660		

[1]NOTES: Authority Having Jurisdiction may ask for Luminaire cut sheets to confirm wattage used for compliance per §130.0(c). Wattage used must be the maximum rated for the luminaire, not the lamp.

G. TRACK LIGHTING
This Section Does Not Apply

H. INDOOR LIGHTING CONTROLS (Not Including PAFs)
*Table Instructions: Please include lighting controls for conditioned and unconditioned spaces in this table. When an option having a * is selected, the notes section of this table must be completed. The lighting controls section of the Compliance Summary Table on the first page will show "DOES NOT COMPLY" if the notes are left blank.*

Building Level Controls

01 Mandatory Demand Response §130.1(e)	02 Shut-off Controls §130.1(c)	03 Field Inspector Pass	Fail
Not Required < 10,000 SF	See Area Level Controls	☐	☐

Area Level Controls
Table Continued

STATE OF CALIFORNIA
Indoor Lighting
NRCC-LTI-E (Created 7/18) — CALIFORNIA ENERGY COMMISSION

CERTIFICATE OF COMPLIANCE		NRCC-LTI-E
This document is used to demonstrate compliance with requirements in §110.9, §130.0, §130.1, §140.6, and §141.0(b)2 for indoor lighting scopes using the prescriptive path.		
Project Name: Jack Hammet Sports Complex	Report Page:	Page 1 of 6
Project Address: 2750 Fairview Rd.	Date Prepared:	11/15/2019

A. GENERAL INFORMATION

01	Project Location (city)	Costa Mesa	04	Total Conditioned Floor Area (ft²)	1,349
02	Climate Zone	6	05	Total Unconditioned Floor Area (ft²)	0
03	Occupancy Types Within Project (select all that apply):		06	# of Stories (Habitable Above Grade)	1

☐ Office ☐ Retail ☑ Warehouse ☐ Hotel/Motel ☐ School ☐ Support Areas
☐ Parking Garage ☐ High-Rise Residential ☐ Relocatable ☐ Other (write in):

B. PROJECT SCOPE
Table Instructions: Include any lighting systems that are within the scope of the permit application and are demonstrating compliance using the prescriptive path outlined in §140.6 or §141.0(b)2 for alterations. WARNING: Changing the Calculation Method in this table will result in the deletion of data previously input. If you need to change the calculation method, please open a new form or use "Save As".

Scope of Work 01: My Project Consists of (check all that apply):		Conditioned Spaces 02: Calculation Method	03: Area (ft²)	Unconditioned Spaces 04: Calculation Method	05: Area (ft²)
☐ New Lighting System					
☑ Altered Lighting System	Entire Luminaire Alteration	Area Category	1,349	Area Category	0
	Total Area of Work (ft²)	1,349		0	

C. COMPLIANCE RESULTS
Table Instructions: If any cell on this table says "DOES NOT COMPLY" or "COMPLIES with Exceptional Conditions" refer to Table D. for guidance.

Allowed Lighting Power per §140.6(b) (Watts); Actual Lighting Power per §140.6(a) (Watts); Compliance Results

Lighting in conditioned and unconditioned spaces must not be combined for compliance per §140.6(b)1.	01 Complete Building §140.6(c)1 (See Table I)	02 Area Category §140.6(c)2 (See Table I)	03 Area Category Footnotes §140.6(c)2G (+) (See Table K)	04 Tailored §140.6(c)3 (+) (See Table L)		05 Total Allowed (Watts)		06 Total Designed (Watts) (See Table F)	07 Adjustments: Portable Lighting §140.6(a) (-) (See Table J)	08 PAF Control Credits §140.6(a)2 (-) (See Table R)		09 Total Actual (Watts) *Includes Adjustments	10 05 Must be ≥ 09 §140.6
Conditioned:		809.4			=	809.4	≥	660			=	660	COMPLIES
Unconditioned:					=		≥				=		

Controls Compliance (See Table H for Details): COMPLIES with Exceptional Conditions
Rated Power Reduction Compliance (See Table S for Details): Not Applicable

STATE OF CALIFORNIA
Outdoor Lighting
NRCC-LTO-E (Created 9/17) — CALIFORNIA ENERGY COMMISSION

CERTIFICATE OF COMPLIANCE		NRCC-LTO-E
Project Name: Jack Hammet Sports Complex	Report Page:	Page 2 of 6
Project Address: 2750 Fairview Rd.	Date Prepared:	11/15/2019

D. EXCEPTIONAL CONDITIONS
This table is auto-filled with uneditable comments because of selections made or data entered in tables throughout the form.

A luminaire in Table F may be required to comply with Cutoff Requirements, but nothing has been selected in Table F. Column 09.

E. ADDITIONAL REMARKS
This table includes remarks made by the permit applicant to the Authority Having Jurisdiction.

F. OUTDOOR LIGHTING FIXTURE SCHEDULE
Table Instructions: For new or altered lighting systems demonstrating compliance with §140.7 (ie Table I has expanded for input), include all luminaires being installed and any existing luminaires remaining or being moved within the spaces covered by the permit application in the Table below. For altered lighting systems using the Existing Power method per §141.0(b)2L (ie Table N has expanded for input), include only new luminaires being installed and replacement luminaires being installed as part of the project scope (ie, do not include existing luminaires remaining or existing luminaires being moved).

Designed Wattage:

01 Name or Item Tag	02 Complete Luminaire Description	03 Watts per luminaire[1]	04 How Wattage is determined	05 Total number luminaires	06 Luminaire Status[2]	07 Excluded per §140.7(a)	08 Design Watts	09 Cutoff Req. > 150W §130.2(b)[3]	10 Field Inspector Pass	Fail
F4	18W LED Wall Mount Fixture F4	18	Mfr. Spec[1]	10	New	☐	180		☐	☐
S1	217W LED Poletop Fixture S1	217	Mfr. Spec[1]	12	New	☐	2,604		☐	☐
S2	434W LED Poletop Fixture S2	434	Mfr. Spec[1]	1	New	☐	434		☐	☐
S3	75W LED Poletop Fixture S3	75	Mfr. Spec[1]	6	New	☐	450		☐	☐
						Total Designed Watts:	3,668			

* NOTES: Selections with a * require a note in the space below explaining how compliance is achieved.
EX: Luminaire is lighting a statue; EXCEPTION 2 to §130.2(b).

G. CUTOFF REQUIREMENTS (BUG)
This Section Does Not Apply

H. OUTDOOR LIGHTING CONTROLS

STATE OF CALIFORNIA
Outdoor Lighting
NRCC-LTO-E (Created 9/17) — CALIFORNIA ENERGY COMMISSION

CERTIFICATE OF COMPLIANCE		NRCC-LTO-E
This document is used to demonstrate compliance with requirements in §110.9, §130.0, §130.2, §140.7, and §141.0(b)2L for outdoor lighting scopes using the prescriptive path.		
Project Name: Jack Hammet Sports Complex	Report Page:	Page 1 of 6
Project Address: 2750 Fairview Rd.	Date Prepared:	11/15/2019

A. GENERAL INFORMATION

01	Project Location (city)	Costa Mesa	04	Total Illuminated Hardscape Area (ft²)	131,716.4
02	Climate Zone	6			
03	Outdoor Lighting Zone per Title 24, Part 1 §10-114 or as designated by Authority Having Jurisdiction (AHJ):				

☐ LZ-0: Very Low - Undeveloped Parkland ☐ LZ-2: Moderate - Rural Areas ☐ LZ-4: High - Must be reviewed by CA Energy Commission for Approval
☐ LZ-1: Low - Developed Parkland ☑ LZ-3: Moderately High - Urban Areas

B. PROJECT SCOPE
Table Instructions: Include any outdoor lighting systems that are within the scope of the permit application and are demonstrating compliance using the prescriptive path outlined in §140.7 or §141.0(b)2L for alterations.

My project consists of:

01	02
☑ New Lighting System	Must Comply with Allowances from §140.7.
☐ Altered Lighting System	Is your alteration increasing the connected lighting load (Watts)? ◯ Yes ◯ No

[1] FOOTNOTES: % of Existing Luminaires Being Altered = (Sum Total of Luminaires Being Added or Altered / Existing Luminaires within the Scope of the Permit Application) x 100

C. COMPLIANCE RESULTS
Table Instructions: If any cell on this table says "DOES NOT COMPLY" or "COMPLIES with Exceptional Conditions" refer to Table D. for guidance.

Calculation of Total Allowed Lighting Power (Watts) §140.7 or §141.0(b)2L; Compliance Results

01 General Hardscape Allowance §140.7(d)1 (See Table I)		02 Per Application §140.7(d)2 (See Table J)		03 Sales Frontage §140.7(d)2 (See Table K)		04 Ornamental §140.7(d)2 (See Table L)		05 Per Specific Area §140.7(d)2 (See Table M)		06 Existing Power §141.0(b)2L (See Table N)		07 Total Allowed (Watts)		08 Total Actual (Watts) (See Table F)	09 07 Must be ≥ 08
7,078.406	+		+		+		+		OR		=	7,078.406	≥	3,668	COMPLIES

Cutoff Compliance (See Table G for Details): Not Applicable
Controls Compliance (See Table H for Details): COMPLIES

STATE OF CALIFORNIA
Indoor Lighting
NRCC-LTI-E (Created 7/18) — CALIFORNIA ENERGY COMMISSION

CERTIFICATE OF COMPLIANCE		NRCC-LTI-E
Project Name: Jack Hammet Sports Complex	Report Page:	Page 6 of 6
Project Address: 2750 Fairview Rd.	Date Prepared:	11/15/2019

DOCUMENTATION AUTHOR'S DECLARATION STATEMENT

Documentation Author Name: Leonard Maya	Documentation Author Signature: [signature]
Company: Design West Engineering	Signature Date: 11/15/2019
Address: 275 W. Hospitality Lane, Suite #100	CEA/ HERS Certification Identification (if applicable): E19480
City/State/Zip: San Bernardino, CA 92408	Phone: 909-890-3700

RESPONSIBLE PERSON'S DECLARATION STATEMENT
I certify the following under penalty of perjury, under the laws of the State of California:
1. **The information provided on this Certificate of Compliance is true and correct.**
2. **I am eligible under Division 3 of the Business and Professions Code to accept responsibility for the building design or system design identified on this Certificate of Compliance (responsible designer)**
3. **The energy features and performance specifications, materials, components, and manufactured devices for the building design or system design identified on this Certificate of Compliance conform to the requirements of Title 24, Part 1 and Part 6 of the California Code of Regulations.**
4. **The building design features or system design features identified on this Certificate of Compliance are consistent with the information provided on other applicable compliance documents, worksheets, calculations, plans and specifications submitted to the enforcement agency for approval with this building permit application.**
5. **I will ensure that a completed signed copy of this Certificate of Compliance shall be made available with the building permit(s) issued for the building, and made available to the enforcement agency for all applicable inspections. I understand that a completed signed copy of this Certificate of Compliance is required to be included with the documentation the builder provides to the building owner at occupancy.**

Responsible Designer Name: Leonard Maya	Responsible Designer Signature: [signature]
Company : Design West Engineering	Date Signed: 11/15/2019
Address: 275 W. Hospitality Lane, Suite #100	License: E19480
City/State/Zip: San Bernardino, CA 92408	Phone: 909-890-3700

STATE OF CALIFORNIA
Indoor Lighting
NRCC-LTI-E (Created 7/18) — CALIFORNIA ENERGY COMMISSION

CERTIFICATE OF COMPLIANCE		NRCC-LTI-E
Project Name: Jack Hammet Sports Complex	Report Page:	Page 5 of 6
Project Address: 2750 Fairview Rd.	Date Prepared:	11/15/2019

T. DECLARATION OF REQUIRED CERTIFICATES OF INSTALLATION
Table Instructions: Selections have been made based on information provided in previous tables of this document. If any selection needs to be changed, please explain why in Table E. Additional Remarks. These documents must be provided to the building inspector during construction and can be found online at http://www.energy.ca.gov/2015publications/CEC-400-2015-033/appendices/forms/NRCI

YES	NO	Form/Title	Field Inspector Pass	Fail
◉	◯	NRCI-LTI-01-E - Must be submitted for all buildings	☐	☐
◉	◯	NRCI-LTI-02-E - Must be submitted for a lighting control system, or for an Energy Management Control System (EMCS), to be recognized for compliance.	☐	☐
◯	◉	NRCI-LTI-03-E - Must be submitted for a line-voltage track lighting integral current limiter, or for a supplementary overcurrent protection panel used to energize only line-voltage track lighting, to be recognized for compliance.	☐	☐
◯	◉	NRCI-LTI-04-E - Must be submitted for two interlocked systems serving an auditorium, a convention center, a conference room, a multipurpose room, or a theater to be recognized for compliance.	☐	☐
◯	◉	NRCI-LTI-05-E - Must be submitted for a Power Adjustment Factor (PAF) to be recognized for compliance.	☐	☐
◯	◉	NRCI-LTI-06-E - Must be submitted for additional wattage installed in a video conferencing studio to be recognized for compliance.	☐	☐

U. DECLARATION OF REQUIRED CERTIFICATES OF ACCEPTANCE
Table Instructions: Selections have been made based on information provided in previous tables of this document. If any selection needs to be changed, please explain why in Table E. Additional Remarks. These documents must be provided to the building inspector during construction and must be completed through an Acceptance Test Technician Certification Provider (ATTCP). For more information visit: http://www.energy.ca.gov/title24/attcp/providers.html

YES	NO	Form/Title	Field Inspector Pass	Fail
◉	◯	NRCA-LTI-02-A - Must be submitted for occupancy sensors and automatic time switch controls.	☐	☐
◯	◉	NRCA-LTI-03-A - Must be submitted for automatic daylight controls.	☐	☐
◯	◉	NRCA-LTI-04-A - Must be submitted for demand responsive lighting controls.	☐	☐
◯	◉	NRCA-LTI-05-A - Must be submitted for institutional tuning power adjustment factor (PAF).	☐	☐

STATE OF CALIFORNIA
Outdoor Lighting
NRCC-LTO-E (Created 9/17) — CALIFORNIA ENERGY COMMISSION

CERTIFICATE OF COMPLIANCE		NRCC-LTO-E
Project Name: Jack Hammet Sports Complex	Report Page:	Page 6 of 6
Project Address: 2750 Fairview Rd.	Date Prepared:	11/15/2019

DOCUMENTATION AUTHOR'S DECLARATION STATEMENT

Documentation Author Name: Leonard Maya	Documentation Author Signature: [signature]
Company: Design West Engineering	Signature Date: 11/15/2019
Address: 275 W. Hospitality Lane, Suite #100	CEA/ HERS Certification Identification (if applicable): E19480
City/State/Zip: San Bernardino, CA 92408	Phone: 909-890-3700

RESPONSIBLE PERSON'S DECLARATION STATEMENT
I certify the following under penalty of perjury, under the laws of the State of California:
1. **The information provided on this Certificate of Compliance is true and correct.**
2. **I am eligible under Division 3 of the Business and Professions Code to accept responsibility for the building design or system design identified on this Certificate of Compliance (responsible designer)**
3. **The energy features and performance specifications, materials, components, and manufactured devices for the building design or system design identified on this Certificate of Compliance conform to the requirements of Title 24, Part 1 and Part 6 of the California Code of Regulations.**
4. **The building design features or system design features identified on this Certificate of Compliance are consistent with the information provided on other applicable compliance documents, worksheets, calculations, plans and specifications submitted to the enforcement agency for approval with this building permit application.**
5. **I will ensure that a completed signed copy of this Certificate of Compliance shall be made available with the building permit(s) issued for the building, and made available to the enforcement agency for all applicable inspections. I understand that a completed signed copy of this Certificate of Compliance is required to be included with the documentation the builder provides to the building owner at occupancy.**

Responsible Designer Name: Leonard Maya	Responsible Designer Signature: [signature]
Company : Design West Engineering	Date Signed: 11/15/2019
Address: 275 W. Hospitality Lane, Suite #100	License: E19480
City/State/Zip: San Bernardino, CA 92408	Phone: 909-890-3700

STATE OF CALIFORNIA
Outdoor Lighting
NRCC-LTO-E (Created 9/17) — CALIFORNIA ENERGY COMMISSION

CERTIFICATE OF COMPLIANCE		NRCC-LTO-E
Project Name: Jack Hammet Sports Complex	Report Page:	Page 5 of 6
Project Address: 2750 Fairview Rd.	Date Prepared:	11/15/2019

P. DECLARATION OF REQUIRED CERTIFICATES OF ACCEPTANCE
Table Instructions: Selections have been made based on information provided in previous tables of this document. If any selection needs to be changed, please explain why in Table E. Additional Remarks. These documents must be provided to the building inspector during construction and must be completed through an Acceptance Test Technician Certification Provider (ATTCP). For more information visit: http://www.energy.ca.gov/title24/attcp/providers.html

YES	NO	Form/Title	Field Inspector Pass	Fail
◉	◯	NRCA-LTO-02-A - Must be submitted for all outdoor lighting controls except for alterations where controls area added to ≤ 20 luminaires.	☐	☐

STATE OF CALIFORNIA
Outdoor Lighting
NRCC-LTO-E (Created 9/17) — CALIFORNIA ENERGY COMMISSION

CERTIFICATE OF COMPLIANCE		NRCC-LTO-E
Project Name: Jack Hammet Sports Complex	Report Page:	Page 4 of 6
Project Address: 2750 Fairview Rd.	Date Prepared:	11/15/2019

J. LIGHTING ALLOWANCE: PER APPLICATION
This Section Does Not Apply

K. LIGHTING ALLOWANCE: SALES FRONTAGE
This Section Does Not Apply

L. LIGHTING ALLOWANCE: ORNAMENTAL
This Section Does Not Apply

M. LIGHTING ALLOWANCE: PER SPECIFIC AREA
This Section Does Not Apply

N. EXISTING CONDITIONS POWER ALLOWANCE (alterations only)
This Section Does Not Apply

O. DECLARATION OF REQUIRED CERTIFICATES OF INSTALLATION
Table Instructions: Selections have been made based on information provided in previous tables of this document. If any selection needs to be changed, please explain why in Table E. Additional Remarks. These documents must be provided to the building inspector during construction and can be found online at http://www.energy.ca.gov/2015publications/CEC-400-2015-033/appendices/forms/NRCI

YES	NO	Form/Title	Field Inspector Pass	Fail
◉	◯	NRCI-LTO-01-E - Must be submitted for all buildings.	☐	☐
◉	◯	NRCI-LTO-02-E - Must be submitted for a lighting control system; or for an Energy Management Control System (EMCS), to be recognized for compliance.	☐	☐

STATE OF CALIFORNIA
Outdoor Lighting
NRCC-LTO-E (Created 9/17) — CALIFORNIA ENERGY COMMISSION

CERTIFICATE OF COMPLIANCE		NRCC-LTO-E
Project Name: Jack Hammet Sports Complex	Report Page:	Page 3 of 6
Project Address: 2750 Fairview Rd.	Date Prepared:	11/15/2019

Table Instructions: Complete this table demonstrating compliance with controls requirements for all new or altered luminaires installed as part of the permit application. For alteration projects, luminaires which are existing to remain (ie untouched) and luminaires which are removed and reinstalled (wiring only) do not need to be included in this table even if they are within the spaces covered by the permit application.
*When an option having a * is selected, the notes section of this table must be completed. The lighting controls section of the Compliance Summary Table on the first page will show "DOES NOT COMPLY" if the notes are left blank. For each requirement in columns 02 through 07, do not leave the field blank, instead select NA or Exempt* from the dropdown list to indicate not applicable or an exemption.*

Mandatory Controls

01 Area Description	02 Motion Sensor: Incandescent>100W §130.2(a)	03 Shut-Off §130.2(c)1	04 Auto-Schedule §130.2(c)2	05 Motion Sensor §130.2(c)3	06 Sales Frontage §130.2(c)4	07 Façade, Ornament, Outdoor Dining §130.2(c)5	08 Field Inspector Pass	Fail
Parking Lot	NA: No Incand>100W	Photocontrol	Yes	NA: Mounted>24ft	NA: No Sales Front Ltg	No Applicable Lt	☐	☐
Parking Lot	NA: No Incand>100W	Photocontrol	Yes	Yes	NA: No Sales Front Ltg	No Applicable Lt	☐	☐

*NOTES: Controls with a * require a note in the space below explaining how compliance is achieved.
EX: Not permitted by health & safety to be turned off; EXCEPTION 1 to §130.2(c).

I. LIGHTING POWER ALLOWANCE (per §140.7)
Table Instructions: Please complete this table for areas using the allowance calculations per §140.7. General Hardscape Allowance is per Table 140.7-A while "Use it or lost it" Allowances are per Table 140.7-B. Indicate which allowances are being used to expand sections for user input. Luminaires that qualify for one of the "Use it or lose it" allowances shall not qualify for another "Use it or lose it" allowance.

01: ☑ General Hardscape Allowance	"Use it or lose it" Allowance (Watts): ☐ Per Application	☐ Sales Frontage	☐ Ornamental	☐ Per Specific Area
Table I (below)	Table J	Table K	Table L	Table M

Calculated General Hardscape Lighting Power Allowance per Table 140.7-A

02 Area Description	03 AWA: Illuminated Area (ft²)	04 AWA: Allowed Density (W/ft²)	05 AWA: Area Allowance (Watts)	06 LWA: Perimeter Length (lf)	07 LWA: Allowed Density (W/lf)	08 LWA: Linear Allowance (Watts)	09 Total General AWA + LWA (Watts)
Building Lights	282.4	0.04	11.296	290	0.35	101.5	112.796
Parking Lot Lighting	131,434	0.04	5,257.36	3,395	0.35	1,188.25	6,445.61
						Initial Wattage Allowance for Entire Site (Watts):	520
						Total General Hardscape Allowance (Watts):	7,078.406

Landscape Architect:
DVD David Volz Design
Landscape Architecture & Park Planning
Costa Mesa Office:
151 Kalmus Drive, Suite M8
Costa Mesa, CA 92626
Phone: (714) 641-1300
Fax: (714) 641-1323
e-mail: drawings@dvolzdesign.com
www.dvolzdesign.com

Subconsultant:
275 W. Hospitality Lane, Suite #100
San Bernardino, CA 92408
Phone: 909-890-3700
Fax: 909-890-3770
Email: cadd@designwesteng.com
DESIGN WEST ENGINEERING
MECHANICAL • ELECTRICAL • ENERGY CONSULTANTS

Seal:

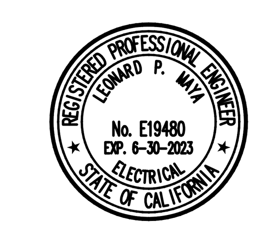

1-800-422-4133
DIG ALERT
UNDERGROUND SERVICE ALERT OF SOUTHERN CALIFORNIA

Revisions:

No.	Date	Revisions	By

Project :
JACK HAMMETT SPORTS COMPLEX
2750 Fairview Rd.

Owner:
City of Costa Mesa

Project No :
Drawn By : RM
Checked By : RM
Date : FEB 2019
Scale : AS SHOWN

Drawing Title :
TITLE 24 COMPLIANCE DOCUMENTS

Drawing No :
E-0.3

SHEET 34 OF 41

19-249

R:_PROJECT\2019\19-249 JACK HAMMET SPORTS PARK\16-209 E-T24 - 2021-09-28 - LONNIE BUTLER

LOAD SUMMARY			
EXISTING MAIN SWITCHBOARD ' MSA '		LOAD VA	LOAD AMPS
1	EXISTING LOAD*	220000	265
2	+25% EXIST LOAD PER NEC 220.87	55000	66
3	NEW PANEL ' P1 '	5920	7
4	NEW SITE LTG	3263	4
5	NEW MOTORIZED GATE	1662	2
6	FLAG/SIGN LIGHTS	101	0.1
8	SPACE		0
9	SPACE		0
	TOTAL @ 480Y/277V 3PH 4W WITH LCL:	285946	344

*EXISTING LOAD BASED ON PEAK DEMAND FROM 1 YR. UTILITY METERING HISTORY

ELECTRICAL LOAD CALCS 3

VOLTAGE DROP - FLAG/SIGN LTG										
RUN #	QTY	VOLTS	PHASE	VA FIXT	AMPS	WIRE SIZE	RES.	DIST.	VOLT DROP	%
' MSA ' - ' MPZ '	1	277	1	101	0.36	#10	1.2000	200	0.18	0.06
TOTALS								200	0.18	0.06

VOLTAGE DROP - POLE LTG										
RUN #	QTY	VOLTS	PHASE	VA FIXT	AMPS	WIRE SIZE	RES.	DIST.	VOLT DROP	%
SWBD - LTG	1	277	1	3263	11.78	#6	0.4900	35	0.40	0.15
LTG - LTG	1	277	1	2103	7.60	#6	0.4900	365	2.72	0.98
LTG - LTG	1	274	1	1669	6.09	#6	0.4900	180	1.07	0.39
LTG - LTG	1	273	1	1018	3.73	#6	0.4900	350	1.28	0.47
LTG - LTG	1	272	1	943	3.47	#6	0.4900	185	0.63	0.23
LTG - LTG	1	271	1	509	1.88	#6	0.4900	110	0.20	0.07
LTG - LTG	1	271	1	434	1.60	#6	0.4900	90	0.14	0.05
LTG - LTG	1	271	1	217	0.80	#6	0.4900	110	0.09	0.03
TOTALS								1425	6.54	2.38

VOLTAGE DROP - MOTOR										
RUN #	QTY	VOLTS	PHASE	VA FIXT	AMPS	WIRE SIZE	RES.	DIST.	VOLT DROP	%
SWBD - 15 HP PUMP	1	480	3	17451	20.99	#10	1.2000	315	13.74	2.86
SWBD - GATES	2	277	1	1662	12.00	#8	0.7800	310	5.80	2.10

VOLTAGE DROP - TRANSFORMERS										
RUN #	*QTY*	*VOLTS*	*PHASE*	*VA FIXT*	*AMPS*	*WIRE SIZE*	*RES.*	*DIST.*	*VOLT DROP*	*%*
' MSA ' - ' XFMR T-1 '	*1*	*480*	*3*	*5920*	*7.12*	*#8*	*0.7800*	*150*	*1.44*	*0.30*
' MSA ' - ' XFMR T-2 '	*1*	*480*	*3*	*1600*	*1.92*	*#8*	*0.7800*	*1000*	*2.60*	*0.54*

VOLTAGE DROP CALCS 4

G.E.C. SCHEDULE

LABEL	SERVICE/O.C.P.D.	CONDUCTOR	CONDUIT
1-GEC	60A-100A	#6	3/4"
2-GEC	110A-200A	#4	1"
3-GEC	225A-400A	#1/0	1"
4-GEC	> 400A	#3/0	1-1/4"

NOTE:
ALL GROUNDING ELECTROD CONDUCTOR SIZES ARE BASED ON BARE COPPER CONDUCTOR UNLESS OTHERWSE NOTED AND SIZE PER CEC TABLE 250.66.

600V FEEDER SCHEDULE 3Ø 3W

LABEL	TYPE	SETS	PHASE	NEUTRAL	GROUND	CONDUIT
20-D	20A-3W	1	3 # 12	NA	1 # 12	3/4"
30-D	30A-3W	1	3 # 8	NA	1 # 10	1"
40-D	40A-3W	1	3 # 8	NA	1 # 10	1"
50-D	50A-3W	1	3 # 6	NA	1 # 10	1"
60-D	60A-3W	1	3 # 1	NA	1 # 8	1-1/4"
70-D	70A-3W	1	3 # 4	NA	1 # 8	1-1/4"
80-D	80A-3W	1	3 # 4	NA	1 # 8	1-1/4"
90-D	90A-3W	1	3 # 2	NA	1 # 8	1-1/4"
100-D	100A-3W	1	3 # 1	NA	1 # 8	1-1/4"
125-D	125A-3W	1	3 # 1	NA	1 # 6	1-1/2"
150-D	150A-3W	1	3 # 1/0	NA	1 # 6	1-1/2"
175-D	175A-3W	1	3 # 2/0	NA	1 # 6	2"
200-D	200A-3W	1	3 # 3/0	NA	1 # 6	2"

NOTE:
ALL CONDUCTOR SIZES ARE BASED ON TYPE THHN COPPER CONDUCTOR UNLESS OTHERWSE NOTED. THE AMPACITY OF CONDUCTORS SHALL BE BASED ON THE TERMINALS NOT TO EXCEED 60°C FOR CONDUCTOR SIZE #14 THROUGH #1 AWG OR 75°C FOR CONDUCTOR SIZE OVER #1 AWG AS PER NEC 110.14(C).

BONDING CONDUCTOR SCHEDULE

LABEL	SERVICE/O.C.P.D.	CONDUCTOR
BJC	30A-60A	#8
1-BJC	70A-100A	#6
2-BJC	125A-200A	#4
4-BJC	225A-400A	#1/0
6-BJC	450A-600A	#3/0
8-BJC	800A	#4/0
10-BJC	1000A	#4/0
12-BJC	1200A	#250 KCM
16-BJC	1600A	#300 KCM
20-BJC	2000A	#400 KCM
25-BJC	2500A	#500 KCM
30-BJC	3000A	#600 KCM
40-BJC	4000A	#750 KCM

NOTE:
ALL MAIN/SYSTEM/SUPPLY SIDE BONDING JUMPER CONDUCTOR SIZES ARE BASED ON TYPE BARE COPPER CONDUCTOR UNLESS OTHERWSE NOTED AND SIZED PER CEC TABLE 250.102(C)(1).

600V FEEDER SCHEDULE 1Ø 2W

LABEL	TYPE	SETS	PHASE	NEUTRAL	GROUND	CONDUIT
20-S	20A-2W	1	2 # 12	N/A	1 # 12	3/4"
30-S	30A-2W	1	2 # 10	N/A	1 # 10	3/4"
40-S	40A-2W	1	2 # 8	N/A	1 # 10	1"
50-S	50A-2W	1	2 # 6	N/A	1 # 10	1"
60-S	60A-2W	1	2 # 6	N/A	1 # 10	1"
70-S	70A-2W	1	2 # 4	N/A	1 # 8	1"
80-S	80A-2W	1	2 # 4	N/A	1 # 8	1-1/4"
90-S	90A-2W	1	2 # 2	N/A	1 # 8	1-1/4"
100-S	100A-2W	1	2 # 1	N/A	1 # 8	1-1/4"
125-S	125A-2W	1	2 # 1	N/A	1 # 6	1-1/2"
150-S	150A-2W	1	2 # 1/0	N/A	1 # 6	1-1/2"
175-S	175A-2W	1	2 # 2/0	N/A	1 # 6	2"
200-S	200A-2W	1	2 # 3/0	N/A	1 # 6	2"

NOTE:
ALL CONDUCTOR SIZES ARE BASED ON TYPE THHN COPPER CONDUCTOR UNLESS OTHERWSE NOTED. THE AMPACITY OF CONDUCTORS SHALL BE BASED ON THE TERMINALS NOT TO EXCEED 60°C FOR CONDUCTOR SIZE #14 THROUGH #1 AWG OR 75°C FOR CONDUCTOR SIZE OVER #1 AWG AS PER NEC 110.14(C).

600V FEEDER SCHEDULE 3Ø 4W

LABEL	TYPE	SETS	PHASE	NEUTRAL	GROUND	CONDUIT
20-Y	20A-4W	1	3 # 12	1 # 12	1 # 12	3/4"
30-Y	30A-4W	1	3 # 10	1 # 10	1 # 10	3/4"
40-Y	40A-4W	1	3 # 8	1 # 10	1 # 10	1"
50-Y	50A-4W	1	3 # 6	1 # 6	1 # 10	1"
60-Y	60A-4W	1	3 # 6	1 # 6	1 # 10	1"
70-Y	70A-4W	1	3 # 4	1 # 4	1 # 8	1"
80-Y	80A-4W	1	3 # 4	1 # 4	1 # 8	1-1/4"
90-Y	90A-4W	1	3 # 2	1 # 2	1 # 8	1-1/4"
100-Y	100A-4W	1	3 # 1	1 # 1	1 # 8	1-1/2"
125-Y	125A-4W	1	3 # 1	1 # 1	1 # 6	1-1/2"
150-Y	150A-4W	1	3 # 1/0	1 # 1/0	1 # 6	1-1/2"
175-Y	175A-4W	1	3 # 2/0	1 # 2/0	1 # 6	2"
200-Y	200A-4W	1	3 # 3/0	1 # 3/0	1 # 6	2"

NOTE:
ALL CONDUCTOR SIZES ARE BASED ON TYPE THHN COPPER CONDUCTOR UNLESS OTHERWSE NOTED. THE AMPACITY OF CONDUCTORS SHALL BE BASED ON THE TERMINALS NOT TO EXCEED 60°C FOR CONDUCTOR SIZE #14 THROUGH #1 AWG OR 75°C FOR CONDUCTOR SIZE OVER #1 AWG AS PER NEC 110.14(C).

FEEDER SCHEDULES 5

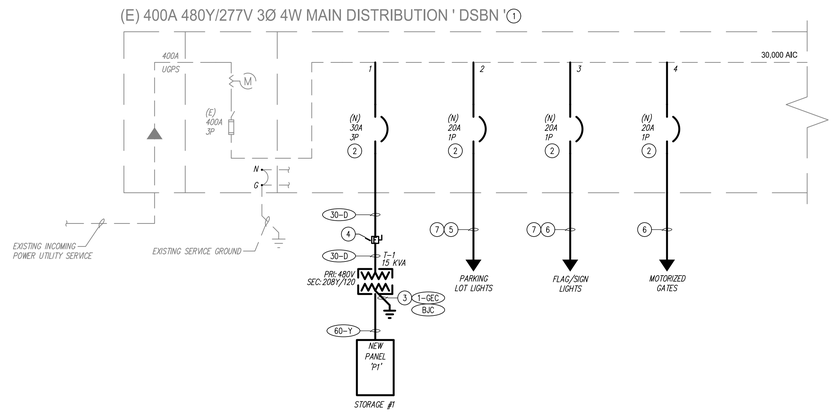

SINGLE LINE DIAGRAM 1

MOUNTING: SURFACE	PANEL	VOLTAGE: 208Y/120V 3PH 4W
FED FROM: DSBN	P1	BUS: 60A
NEMA: 1	(NEW)	MAIN: 60A3P
AIC RATING: 10,000	LOCATION: STORAGE BUILDING	FEEDER: 60-Y

NOTE	DESCRIPTION	A	B	C	TYPE	POLE	AMP		PHASE		AMP	POLE	TYPE	A	B	C	DESCRIPTION	NOTE
1	INTERIOR LTS	180			L	1	20	1	A - -	2	20	1	R	720			SOUTH RECEPTS	
	NORTH RECEPTS		720		R	1	20	3	- B -	4	20	1	R		360		OUTLETS	
2	ROLL-UP DOORS			720	M	1	20	5	- - C	6	20	1	L			90	EXT. LIGHTS	1
2	ROLL-UP DOORS	720			N	1	20	7	A - -	8	20	1	C	250			LTG CONTROL PANEL	
2	ROLL-UP DOORS		720		N	1	20	9	- B -	10	20	1					SPARE	
2	ROLL-UP DOORS			720	N	1	20	11	- - C	12	20	1	N			720	ROLL-UP DOORS	2
	SPACE							13	A - -	14							SPACE	
	SPACE							15	- B -	16							SPACE	
	SPACE							17	- - C	18							SPACE	

CEC LOAD CALC:	CONNECTED	DEMAND	DEMAND	DEMAND
LOAD TYPE	VA	FACTOR	VA	AMPS
(L) LIGHTING	270	1.25	338	1
(R) RECEPTACLE	1800	NEC 220.44	1800	5
(M) MOTOR	720	1.25	900	3
LARGEST MOTOR		0.25	0	0
(C) CONTINUOUS	250	1.25	313	1
(N) NON-CONTINUOUS	2880	1.00	2880	8
(K) KITCHEN (NEC 220.56)	0	0.65	0	0
(S) SPECIAL DEMAND	0	1.00	0	0
TOTALS	5920		6230	
TOTAL AMPS CONNECTED AT 208Y/120V 3PH 4W WITH LCL				17 A

SUBTOTALS:	PHASE
1870 VA	A
1800 VA	B
2250 VA	C
5920 VA	TOTAL
16	AMPS

NOTES:
1. ROUTE CIRCUIT VIA LIGHTING CONTROL PANEL
2. PROVIDE BREAKER WITH LOCK-OFF CAPABILITY

PANEL SCHEDULES 2

GENERAL NOTES

1. REFER TO "GENERAL NOTES" ON ELECTRICAL LEGENDS AND NOTES SHEET FOR WIRING METHODS, MATERIALS, AND REQUIREMENTS.
2. ALL CIRCUIT BREAKERS, PANELBOARDS AND TRANSFORMERS SHALL BE OF THE SAME MANUFACTURER.
3. ALL GROUND CONNECTIONS SHALL BE CADWELD.
4. AVAILABLE FAULT AT SERVICE POINT SHALL BE CONSIDERED AT 30,000 RMS SYM.
5. ALL PANELBOARDS SHALL BE FULLY RATED FOR THE AVAILABLE FAULT UNLESS OTHERWISE NOTED.
6. THE FEEDER LENGTHS SHOWN ON THESE DRAWINGS ARE FOR CALCULATION ONLY AND ARE NOT VALID FOR CONSTRUCTION, BIDDING OR FOR SHORT CIRCUIT CALCULATIONS.
7. CONTRACTOR SHALL UPDATE EXISTING PANEL DIRECTORY OR CREATE A NEW TYPED DIRECTORY, IF ONE DOES NOT EXIST, IDENTIFYING EACH CIRCUIT AND INSTALLED CIRCUIT LOADS, MOUNTED IN GLASS OR PLASTIC INSIDE DOOR. THE CONTRACTOR SHALL BE RESPONSIBLE FOR UPDATING DIRECTORIES TO INDICATE ALL NEW CIRCUITS AND ACTUAL AREA SERVED WHICH IS NOT NECESSARILY THE DESCRIPTION INDICATED ON THE BID DOCUMENTS. USE A COMPUTER OR TYPEWRITER TO CREATE DIRECTORY; HANDWRITTEN DIRECTORIES ARE NOT ACCEPTABLE.

CONSTRUCTION NOTES

1. EXISTING MAIN ELECTRICAL SERVICE TO BE REUSED.
2. PROVIDE NEW CIRCUIT BREAKER IN EXISTING MAIN DISTRIBUTION BOARD. TYPE AND AIC RATING TO MATCH EXISTING.
3. BOND TO DRIVEN GROUND ROD. SUPPLEMENTAL ELECTRODE SHALL BE INSTALLED PER CEC 250.53(A)(3). REFER TO 5/E-4.1
4. PROVIDE 30A 3# PRIMARY FUSED DISCONNECT WITH 30A FUSES, RATED NEMA 3R.
5. PROVIDE (2)#6, (1)#10 GROUND IN 1" CONDUIT.
6. PROVIDE (2)#10, (1)#10 GROUND IN 1" CONDUIT.
7. ROUTE CIRCUIT VIA LIGHTING CONTROL PANEL.

Landscape Architect:

David Volz Design
Landscape Architecture & Park Planning

Costa Mesa Office:
151 Kalmus Drive, Suite M8
Costa Mesa, CA 92626
Phone: (714) 641-1300
Fax: (714) 641-1323

e-mail: drawings@dvolzdesign.com
www.dvolzdesign.com

Subconsultant:

275 W. Hospitality Lane, Suite #100
San Bernardino, CA 92408
Phone: 909-890-3700
Fax: 909-890-3770
Email: cadd@designwesteng.com
DESIGN WEST ENGINEERING
MECHANICAL • ELECTRICAL • ENERGY CONSULTANTS

Seal:

REGISTERED PROFESSIONAL ENGINEER LEONARD P. MAYER No. E19480 EXP. 6-30-2023 ELECTRICAL STATE OF CALIFORNIA

1-800-422-4133
DIGALERT
UNDERGROUND SERVICE ALERT OF SOUTHERN CALIFORNIA

ATTENTION IS DIRECTED TO THE POSSIBLE EXISTENCE OF UNDERGROUND FACILITIES NOT KNOWN OR IN A LOCATION DIFFERENT FROM THAT SHOWN ON THESE PLANS. IN ADDITION TO THE SPECIAL PROVISIONS, THE CONTRACTOR SHALL TAKE STEPS TO ASCERTAIN THE EXACT LOCATION OF ALL UNDERGROUND FACILITIES PRIOR TO DOING WORK THAT MAY DAMAGE SUCH FACILITIES OR INTERFERE WITH THEIR SERVICE.

BEFORE EXCAVATING, THE CONTRACTOR SHALL VERIFY THE LOCATION OF UNDERGROUND UTILITIES BY CONTACTING UNDERGROUND SERVICE ALERT AT 1-800(422-4133).

Revisions:

No.	Date	Revisions	By

Project :
JACK HAMMETT SPORTS COMPLEX
2750 Fairview Rd.
Owner:
City of Costa Mesa

Project No :
Drawn By : RM
Checked By : RM
Date : FEB 2019
Scale : AS SHOWN

Drawing Title :
SINGLE LINE DIAGRAM & PANEL SCHEDULES

Drawing No :
E-0.4

R:_PROJECT\2019\19-249 JACK HAMMET SPORTS PARK\16-209 E-SLD - 2021-09-28 - LONNIE BUTLER

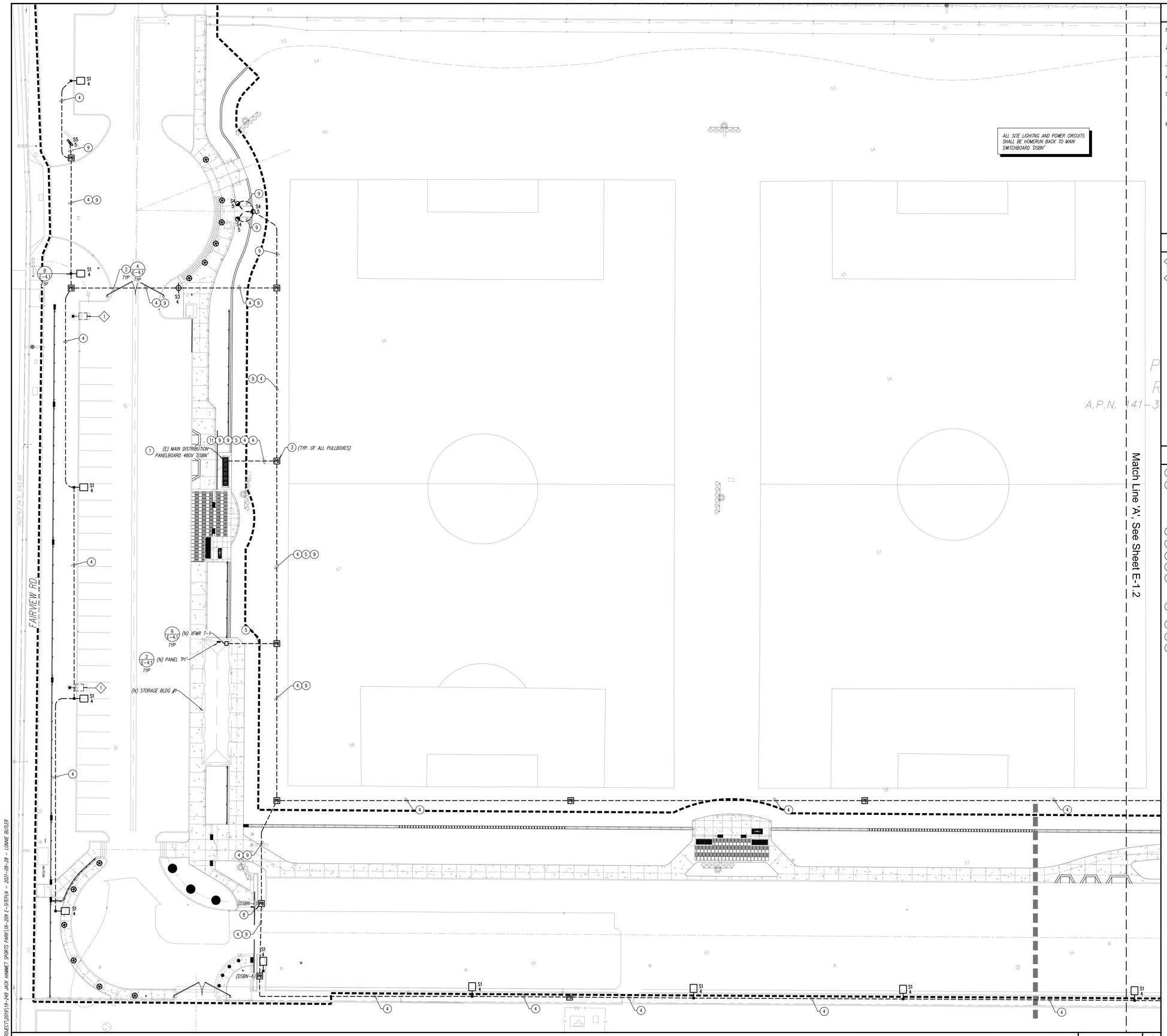

GENERAL NOTES

1. THE CONTRACTOR SHALL INSPECT AND VERIFY ALL FIELD CONDITIONS PRIOR TO START OF WORK.
2. COORDINATE TRENCH ROUTING AND EQUIPMENT LOCATIONS WITH EXISTING CONDITIONS AND NEW WORK.
3. ALL SITE BRANCH CIRCUIT WIRING SHALL BE #10 AWG. OR LARGER.
4. ALL SITE UNDERGROUND CONDUIT TO BE 1" MIN. UNLESS OTHERWISE NOTED.
5. CONTRACTOR IS TO TAKE SPECIAL CARE NOT TO DAMAGE PLANTS OR TREE ROOTS WHEN TRENCHING IN BEDDING OR TREE ROOT AREA. ANY DAMAGED PLANTS TO BE REPLACED/REPAIRED AT CONTRACTOR'S EXPENSE.
6. ALL SPLICES IN A GROUND JUNCTION BOX TO BE WEATHERPROOF (LISTED FOR THE LOCATION).

DEMOLITION NOTES

1. DEMOLISH EXISTING POLE TOP FIXTURE INCLUDING BASE. REMOVE ALL CONDUIT AND CONDUCTORS BACK TO SOURCE.
2. DEMOLISH EXISTING POLE TOP FIXTURE INCLUDING POLE. EXISTING BASE, CONDUIT AND CONDUCTORS SHALL REMAIN.

CONSTRUCTION NOTES

1. EXISTING MAIN SWITCHGEAR TO BE PROTECTED IN PLACE.
2. TRENCHING SHOWN IS DIAGRAMMATICAL. CONTRACTOR TO VERIFY EXACT ROUTING OF EXISTING UNDERGROUND LINES AND OTHER CONDUITS CURRENTLY RUNNING UNDER EXISTING TRENCH AREA. IT IS THE CONTRACTORS RESPONSIBILITY TO VERIFY ALL UNDERGROUND FACILITIES PRIOR TO START OF WORK. ANY BROKEN LINES WILL BE REPAIRED/REPLACED TO MATCH EXISTING CONDITIONS AT CONTRACTOR'S EXPENSE.
3. CONTRACTOR TO PROVIDE 2'X3' PULLBOX. REFER TO (1/E-4.1)
4. PROVIDE (2)#8, (1) #10 GROUND IN 1" CONDUIT.
5. PROVIDE (3)#8, (1) #10 GROUND IN 1" CONDUIT.
6. NOT USED.
7. CONNECT EXISTING CIRCUIT TO NEW POLETOP FIXTURE AND EXTEND CONDUCTORS AS NEEDED. CONTRACTOR SHALL VERIFY ALL ANCHOR BOLT AND BASE REQUIREMENTS WITH MANUFACTURER TO MAKE CERTAIN NEW POLE IS ANCHORED PROPERLY WITH EXISTING BASE.
8. PROVIDE POWER FOR MOTORIZED GATE. VERIFY EXACT LOCATION PRIOR TO ANY WORK.
9. PROVIDE (2)#8, (1) #10 GROUND IN 1" CONDUIT.
10. NOT USED.
11. ROUTE LIGHTING CIRCUITS VIA EXISTING MUSCO CONTROL SYSTEM.

N

Scale: 1" = 20'-0"
0 5' 10' 20' 40'

PARTIAL ELECTRICAL SITE PLAN | SCALE: 1" = 20'-0" | 1

Landscape Architect:

David Volz Design
Landscape Architecture & Park Planning

Costa Mesa Office:
151 Kalmus Drive, Suite M8
Costa Mesa, CA 92626
Phone: (714) 641-1300
Fax: (714) 641-1323

e-mail: drawings@dvolzdesign.com
www.dvolzdesign.com

Subconsultant:

275 W. Hospitality Lane, Suite #100
San Bernardino, CA 92408
Phone: 909-890-3700
Fax: 909-890-3770
Email: cadd@designwesteng.com

DESIGN WEST ENGINEERING
MECHANICAL • ELECTRICAL • ENERGY CONSULTANTS

Seal:

REGISTERED PROFESSIONAL ENGINEER
LEONARD P. MAYER
No. E19480
EXP. 6-30-2023
ELECTRICAL
STATE OF CALIFORNIA

1-800-422-4133
DIGALERT

UNDERGROUND SERVICE ALERT OF SOUTHERN CALIFORNIA

ATTENTION IS DIRECTED TO THE POSSIBLE EXISTENCE OF UNDERGROUND FACILITIES NOT KNOWN OR IN A LOCATION DIFFERENT FROM THAT WHICH IS SHOWN ON THE PLANS OR IN THE SPECIAL PROVISIONS. THE CONTRACTOR SHALL TAKE STEPS TO ASCERTAIN THE EXACT LOCATION OF ALL UNDERGROUND FACILITIES PRIOR TO DOING WORK THAT MAY DAMAGE SUCH FACILITIES OR INTERFERE WITH THEIR SERVICE.

BEFORE EXCAVATING, THE CONTRACTOR SHALL VERIFY THE LOCATION OF UNDERGROUND UTILITIES BY CONTACTING UNDERGROUND SERVICE ALERT AT 1-(800)-422-4133.

Revisions:

No.	Date	Revisions	By

Project :
JACK HAMMETT SPORTS COMPLEX
2750 Fairview Rd.

Owner:
City of Costa Mesa

Project No :	
Drawn By :	RM
Checked By :	RM
Date :	FEB 2019
Scale :	AS SHOWN

Drawing Title :
PARTIAL ELECTRICAL SITE PLAN

Drawing No :
E-1.1

19-249

R:_PROJECT\2019\19-249 JACK HAMMET SPORTS PARK\16-209 E-SITEPLN - 2021-09-28 - LONNIE BUTLER

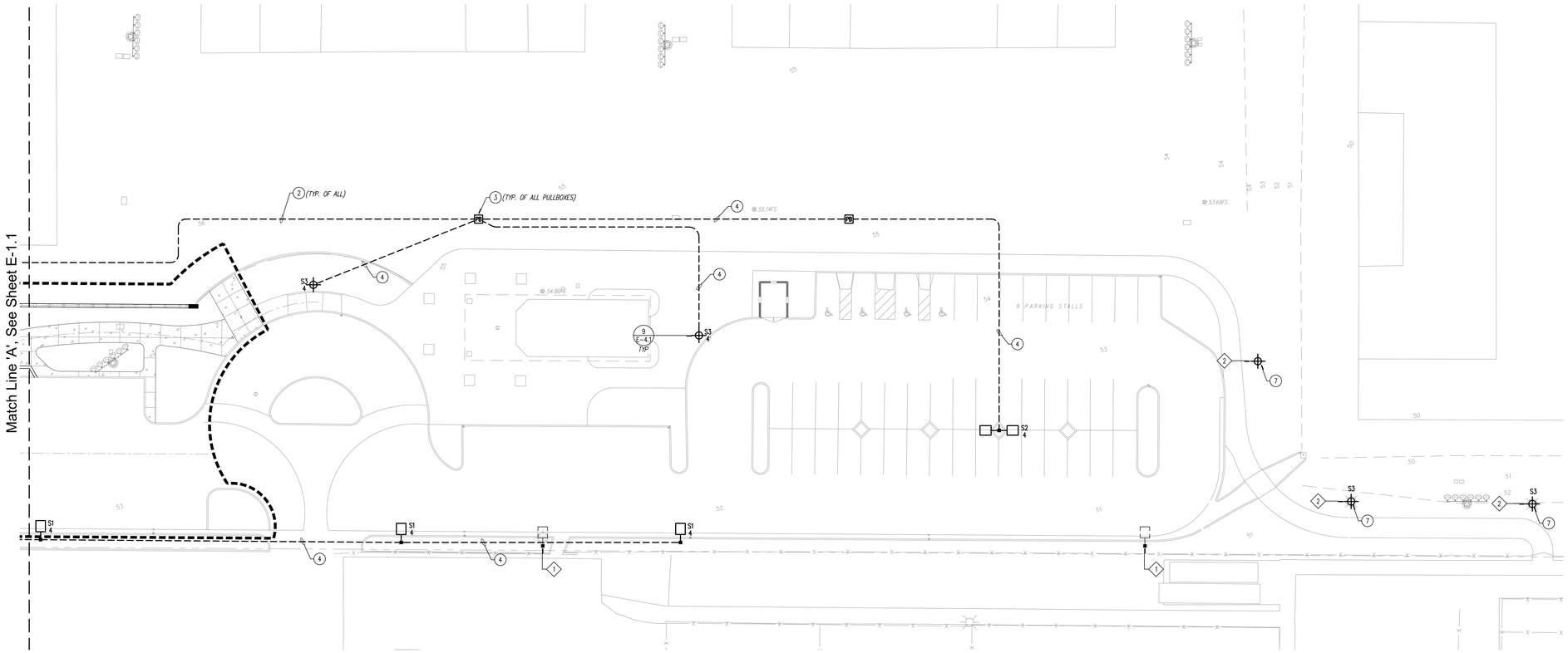

ALL SITE LIGHTING AND POWER CIRCUITS SHALL BE HOMERUN BACK TO MAIN SWITCHBOARD "DSBN"

GENERAL NOTES

1. THE CONTRACTOR SHALL INSPECT AND VERIFY ALL FIELD CONDITIONS PRIOR TO START OF WORK.
2. COORDINATE TRENCH ROUTING AND EQUIPMENT LOCATIONS WITH EXISTING CONDITIONS AND NEW WORK.
3. ALL SITE BRANCH CIRCUIT WIRING SHALL BE #10 AWG. OR LARGER.
4. ALL SITE UNDERGROUND CONDUIT TO BE 1" MIN. UNLESS OTHERWISE NOTED.
5. CONTRACTOR IS TO TAKE SPECIAL CARE NOT TO DAMAGE PLANTS OR TREE ROOTS WHEN TRENCHING IN BEDDING OR TREE ROOT AREA. ANY DAMAGED PLANTS TO BE REPLACED/REPAIRED AT CONTRACTOR'S EXPENSE.
6. ALL SPLICES IN A GROUND JUNCTION BOX TO BE WEATHERPROOF (LISTED FOR THE LOCATION).

DEMOLITION NOTES

1. DEMOLISH EXISTING POLE TOP FIXTURE INCLUDING BASE. REMOVE ALL CONDUIT AND CONDUCTORS BACK TO SOURCE.
2. DEMOLISH EXISTING POLE TOP FIXTURE INCLUDING POLE. EXISTING BASE, CONDUIT AND CONDUCTORS SHALL REMAIN.

CONSTRUCTION NOTES

1. EXISTING MAIN SWITCHGEAR TO BE PROTECTED IN PLACE.
2. TRENCHING SHOWN IS DIAGRAMMATICAL. CONTRACTOR TO VERIFY EXACT ROUTING OF EXISTING UNDERGROUND LINES AND OTHER CONDUITS CURRENTLY RUNNING UNDER EXISTING TRENCH AREA. IT IS THE CONTRACTORS RESPONSIBILITY TO VERIFY ALL UNDERGROUND FACILITIES PRIOR TO START OF WORK. ANY BROKEN LINES WILL BE REPAIRED/REPLACED TO MATCH EXISTING CONDITIONS AT CONTRACTOR'S EXPENSE.
3. CONTRACTOR TO PROVIDE 2'X3' PULLBOX. REFER TO (1/E-4.1)
4. PROVIDE (2)#6, (1) #10 GROUND IN 1" CONDUIT.
5. PROVIDE (3)#8, (1) #10 GROUND IN 1" CONDUIT.
6. NOT USED.
7. CONNECT EXISTING CIRCUIT TO NEW POLETOP FIXTURE AND EXTEND CONDUCTORS AS NEEDED. CONTRACTOR SHALL VERIFY ALL ANCHOR BOLT AND BASE REQUIREMENTS WITH MANUFACTURER TO MAKE CERTAIN NEW POLE IS ANCHORED PROPERLY WITH EXISTING BASE.
8. PROVIDE POWER FOR MOTORIZED GATE. VERIFY EXACT LOCATION PRIOR TO ANY WORK.
9. PROVIDE (2)#8, (1) #10 GROUND IN 1" CONDUIT.
10. NOT USED.
11. ROUTE LIGHTING CIRCUITS VIA EXISTING MUSCO CONTROL SYSTEM.

N

Scale: 1" = 20'-0"

0 5' 10' 20' 40'

PARTIAL ELECTRICAL SITE PLAN | SCALE: 1" = 20'-0" | 1

Landscape Architect:

David Volz Design
Landscape Architecture & Park Planning

Costa Mesa Office:
151 Kalmus Drive, Suite M8
Costa Mesa, CA 92626
Phone: (714) 641-1300
Fax: (714) 641-1323

e-mail: drawings@dvolzdesign.com
www.dvolzdesign.com

Subconsultant:

275 W. Hospitality Lane, Suite #100
San Bernardino, CA 92408
Phone: 909-890-3700
Fax: 909-890-3770
Email: cadd@designwesteng.com

DESIGN WEST ENGINEERING
MECHANICAL • ELECTRICAL • ENERGY CONSULTANTS

Seal:

REGISTERED PROFESSIONAL ENGINEER
LEONARD P. MAYER
No. E19480
EXP. 6-30-2023
ELECTRICAL
STATE OF CALIFORNIA

1-800-422-4133
DIGALERT

UNDERGROUND SERVICE ALERT OF SOUTHERN CALIFORNIA

ATTENTION IS DIRECTED TO THE POSSIBLE EXISTENCE OF UNDERGROUND FACILITIES NOT KNOWN OR IN A LOCATION DIFFERENT FROM THAT WHICH IS SHOWN ON THE PLANS OR IN THE SPECIAL PROVISIONS. THE CONTRACTOR SHALL TAKE STEPS TO ASCERTAIN THE EXACT LOCATION OF ALL UNDERGROUND FACILITIES PRIOR TO DOING WORK THAT MAY DAMAGE SUCH FACILITIES OR INTERFERE WITH THEIR SERVICE.

BEFORE EXCAVATING, THE CONTRACTOR SHALL VERIFY THE LOCATION OF UNDERGROUND UTILITIES BY CONTACTING UNDERGROUND SERVICE ALERT AT 1-(800)-422-4133.

Revisions:

No.	Date	Revisions	By

Project :

JACK HAMMETT SPORTS COMPLEX
2750 Fairview Rd.

Owner:

City of Costa Mesa

Project No :	
Drawn By :	RM
Checked By :	RM
Date :	FEB 2019
Scale :	AS SHOWN

Drawing Title :

PARTIAL ELECTRICAL SITE PLAN

Drawing No :

E-1.2

SHEET 37 OF 41

19-249

R:_PROJECT\2019\19-249 JACK HAMMET SPORTS PARK\16-209 E-SYSTEM - 2021-09-28 - LONNIE BUTLER

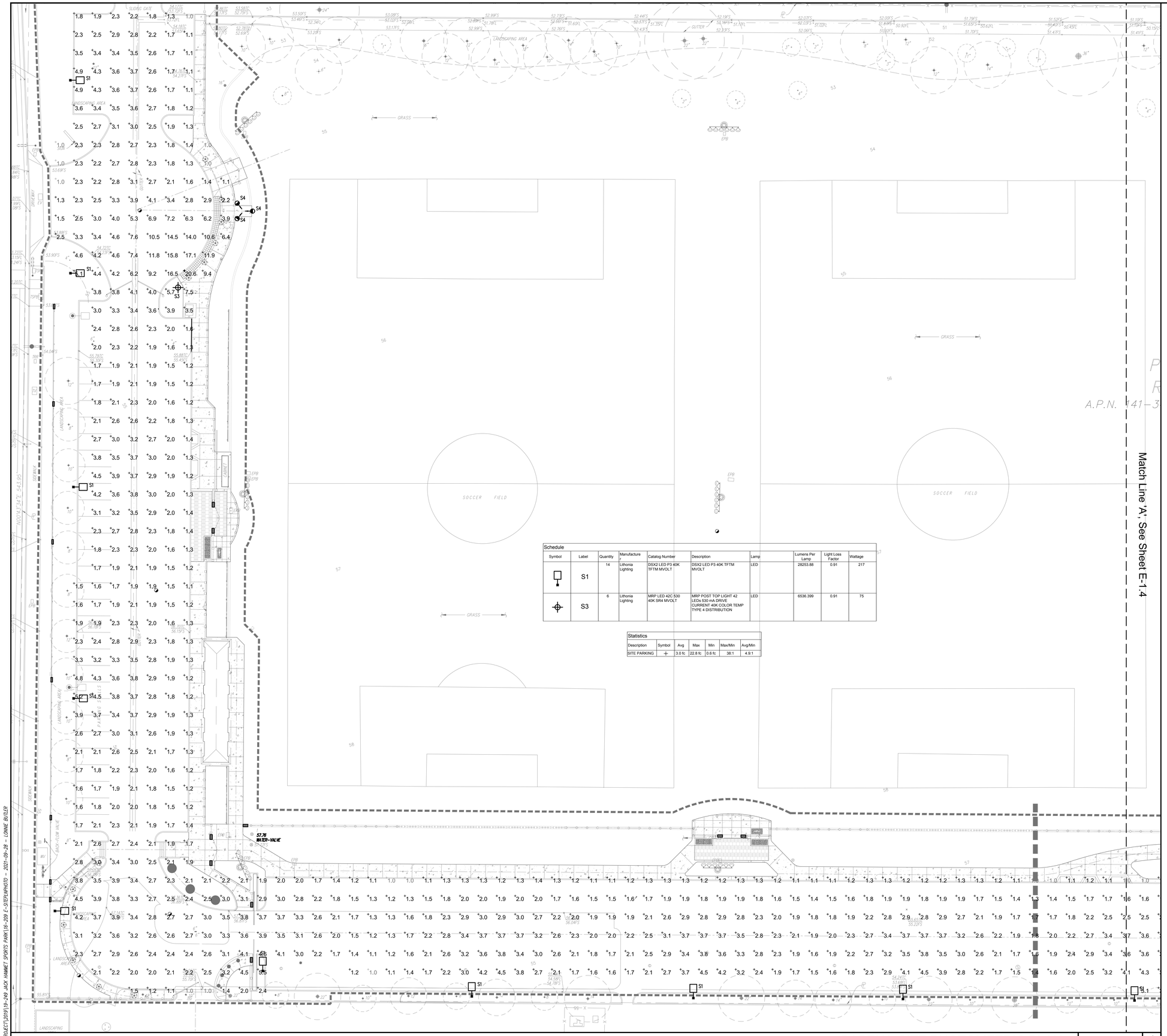

Schedule

Symbol	Label	Quantity	Manufacturer	Catalog Number	Description	Lamp	Lumens Per Lamp	Light Loss Factor	Wattage
	S1	14	Lithonia Lighting	DSX2 LED P3 40K TFTM MVOLT	DSX2 LED P3 40K TFTM MVOLT	LED	28253.88	0.91	217
	S3	6	Lithonia Lighting	MRP LED 42C 530 40K SR4 MVOLT	MRP POST TOP LIGHT 42 LEDs 530 mA DRIVE CURRENT 40K COLOR TEMP TYPE 4 DISTRIBUTION	LED	6536.399	0.91	75

Statistics

Description	Symbol	Avg	Max	Min	Max/Min	Avg/Min
SITE PARKING	+	3.0 fc	22.8 fc	0.6 fc	38:1	4.9:1

PARTIAL SITE PHOTOMETRIC PLAN | SCALE: 1" = 20'-0" | 1

N

Scale: 1" = 20'-0"
0 5' 10' 20' 40'

R:_PROJECT\2019\19-249 JACK HAMMET SPORTS PARK\16-209 E-SITEPHOTO - 2021-09-28 - LONNE BUTLER

Landscape Architect:

David Volz Design
Landscape Architecture & Park Planning

Costa Mesa Office:
151 Kalmus Drive, Suite M8
Costa Mesa, CA 92626
Phone: (714) 641-1300
Fax: (714) 641-1323

e-mail: drawings@dvolzdesign.com
www.dvolzdesign.com

Subconsultant:

275 W. Hospitality Lane, Suite #100
San Bernardino, CA 92408
Phone: 909-890-3700
Fax: 909-890-3770
Email: cadd@designwesteng.com

DESIGN WEST ENGINEERING
MECHANICAL • ELECTRICAL • ENERGY CONSULTANTS

Seal:

REGISTERED PROFESSIONAL ENGINEER
LEONARD P. MAYER
No. E19480
EXP. 6-30-2023
ELECTRICAL
STATE OF CALIFORNIA

1-800-422-4133
DIGALERT

UNDERGROUND SERVICE ALERT OF SOUTHERN CALIFORNIA

ATTENTION IS DIRECTED TO THE POSSIBLE EXISTENCE OF UNDERGROUND FACILITIES NOT KNOWN OR IN A LOCATION DIFFERENT FROM THAT SHOWN ON THESE PLANS. IN ADDITION TO THE SPECIAL PROVISIONS, THE CONTRACTOR SHALL TAKE STEPS TO ASCERTAIN THE EXACT LOCATION OF ALL UNDERGROUND FACILITIES PRIOR TO DOING WORK THAT MAY DAMAGE SUCH FACILITIES OR INTERFERE WITH THEIR SERVICE.

BEFORE EXCAVATING, THE CONTRACTOR SHALL VERIFY THE LOCATION OF UNDERGROUND UTILITIES BY CONTRACTING UNDERGROUND SERVICE ALERT AT 1-800(422-4133).

Revisions:

No.	Date	Revisions	By

Project :

JACK HAMMETT SPORTS COMPLEX
2750 Fairview Rd.

Owner:

City of Costa Mesa

Project No :	
Drawn By :	RM
Checked By :	RM
Date :	FEB 2019
Scale :	AS SHOWN

Drawing Title :

PARTIAL SITE PHOTOMETRIC PLAN

Drawing No :

E-1.3

SHEET 38 OF 41

19-249

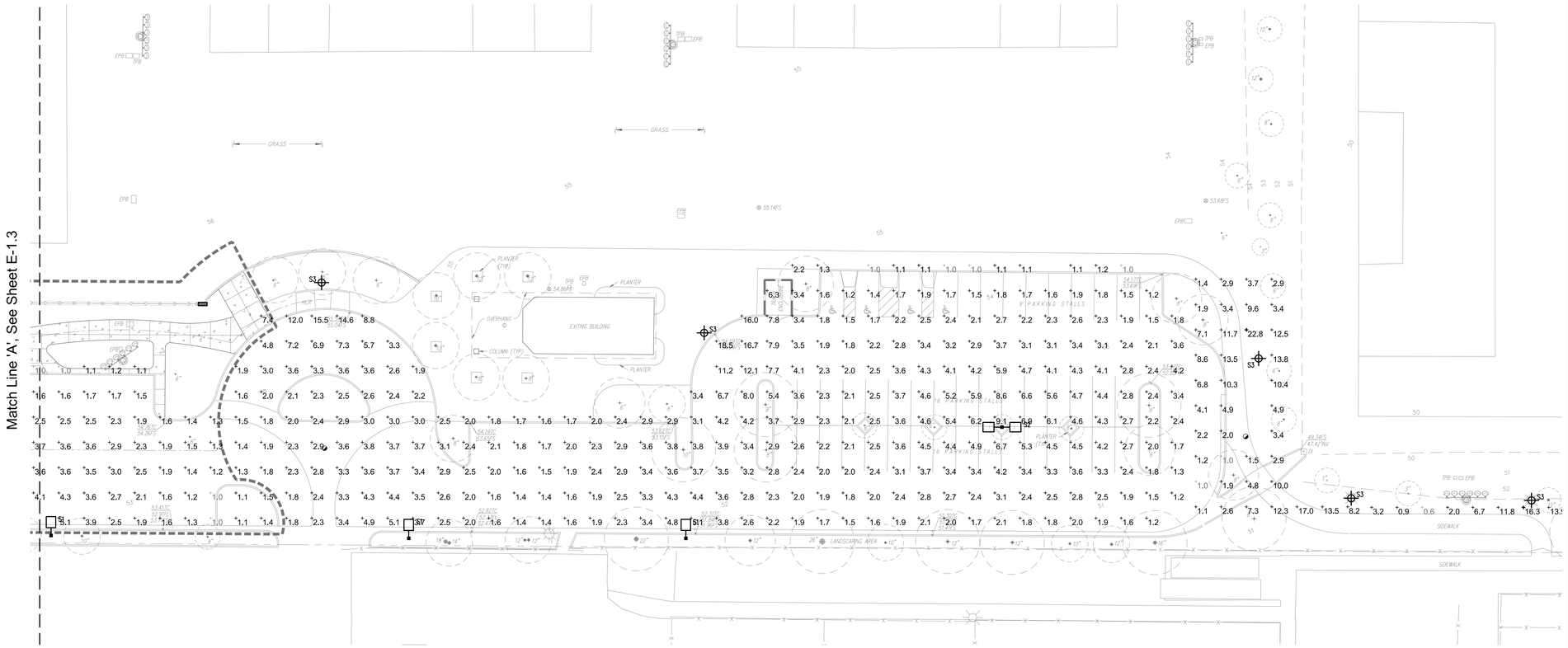

Schedule									
Symbol	Label	Quantity	Manufacturer	Catalog Number	Description	Lamp	Lumens Per Lamp	Light Loss Factor	Wattage
	S1	14	Lithonia Lighting	DSX2 LED P3 40K TFTM MVOLT	DSX2 LED P3 40K TFTM MVOLT	LED	28253.88	0.91	217
	S3	6	Lithonia Lighting	MRP LED 42C 530 40K SR4 MVOLT	MRP POST TOP LIGHT 42 LEDs 530 mA DRIVE CURRENT 40K COLOR TEMP TYPE 4 DISTRIBUTION	LED	6536.399	0.91	75

Statistics						
Description	Symbol	Avg	Max	Min	Max/Min	Avg/Min
SITE PARKING	+	3.0 fc	22.8 fc	0.6 fc	38:1	4.9:1

PARTIAL SITE PHOTOMETRIC PLAN | SCALE: 1" = 20'-0" | 1

N

Scale: 1" = 20'-0"

0 5' 10' 20' 40'

R:_PROJECT\2019\19-249 JACK HAMMET SPORTS PARK\16-209 E-SITEPHOTO - 2021-09-28 - LONNIE BUTLER

Landscape Architect:

David Volz Design
Landscape Architecture & Park Planning

Costa Mesa Office:
151 Kalmus Drive, Suite M8
Costa Mesa, CA 92626
Phone: (714) 641-1300
Fax: (714) 641-1323

e-mail: drawings@dvolzdesign.com
www.dvolzdesign.com

Subconsultant:

275 W. Hospitality Lane, Suite #100
San Bernardino, CA 92408
Phone: 909-890-3700
Fax: 909-890-3770
Email: cadd@designwesteng.com

DESIGN WEST ENGINEERING
MECHANICAL • ELECTRICAL • ENERGY CONSULTANTS

Seal:

REGISTERED PROFESSIONAL ENGINEER
LEONARD P. MAYER
No. E19480
EXP. 6-30-2023
ELECTRICAL
STATE OF CALIFORNIA

1-800-422-4133
DIGALERT

UNDERGROUND SERVICE ALERT OF SOUTHERN CALIFORNIA

ATTENTION IS DIRECTED TO THE POSSIBLE EXISTENCE OF UNDERGROUND FACILITIES NOT KNOWN OR IN A LOCATION DIFFERENT FROM THAT WHICH IS SHOWN ON THE PLANS OR IN THE SPECIAL PROVISIONS. THE CONTRACTOR SHALL TAKE STEPS TO ASCERTAIN THE EXACT LOCATION OF ALL UNDERGROUND FACILITIES PRIOR TO DOING WORK THAT MAY DAMAGE SUCH FACILITIES OR INTERFERE WITH THEIR SERVICE.

BEFORE EXCAVATING, THE CONTRACTOR SHALL VERIFY THE LOCATION OF UNDERGROUND UTILITIES BY CONTRACTING UNDERGROUND SERVICE ALERT AT 1-(800)-422-4133.

Revisions:

No.	Date	Revisions	By

Project :

JACK HAMMETT SPORTS COMPLEX
2750 Fairview Rd.

Owner:

City of Costa Mesa

Project No :
Drawn By : RM
Checked By : RM
Date : FEB 2019
Scale : AS SHOWN

Drawing Title :

PARTIAL SITE PHOTOMETRIC PLAN

Drawing No :

E-1.4

SHEET 39 OF 41

19-249

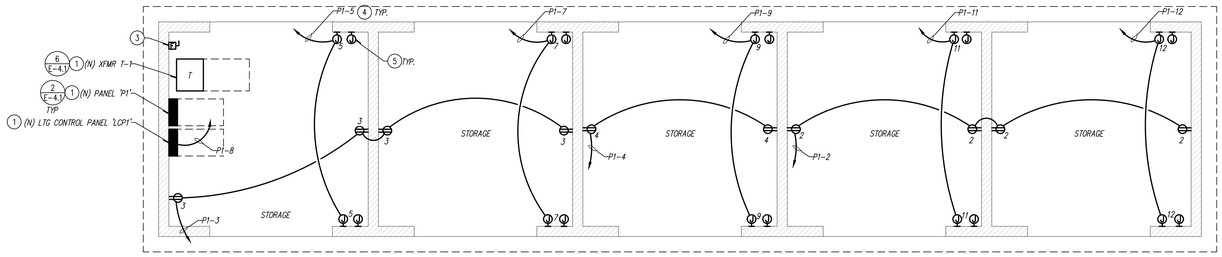

N

POWER & SIGNAL FLOOR PLAN | SCALE: 1/4" = 1'-0" | 1

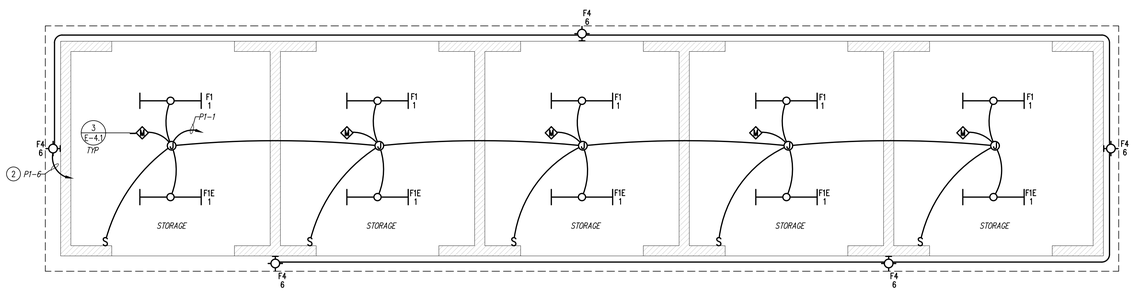

N

LIGHTING FLOOR PLAN | SCALE: 1/4" = 1'-0" | 1

GENERAL NOTES

1. COORDINATE POWER AND DATA DEVICE LOCATIONS, AND DEVICE PLATE COLOR WITH ARCHITECT.

CONSTRUCTION NOTES

1. PROVIDE MINIMUM 3'-0" LEVEL CLEARANCE IN FRONT OF ELECTRICAL EQUIPMENT, PER NEC 110.26.
2. ROUTE CIRCUIT VIA LIGHTING CONTROL PANEL. REFER TO 7 E-4.1
3. PROVIDE TRANSFORMER PRIMARY FUSED DISCONNECT PER SINGLE LINE DIAGRAM. FUSED DISCONNECT SHALL BE BUILDING MAIN DISCONNECT.
4. PROVIDE POWER CONNECTION TO ROLL UP DOOR AND CONTROLS PER MANUFACTURER SPECIFICATIONS. FIELD COORDINATE EXACT LOCATION WITH DOOR INSTALLER.
5. PROVIDE 3/4"C.O. TO OVERHEAD DOOR MOTOR FOR PUSH BUTTON LOW-VOLTAGE CONTROLS.

Landscape Architect:

David Volz Design
Landscape Architecture & Park Planning

Costa Mesa Office:
151 Kalmus Drive, Suite M8
Costa Mesa, CA 92626
Phone: (714) 641-1300
Fax: (714) 641-1323

e-mail: drawings@dvolzdesign.com
www.dvolzdesign.com

Subconsultant:

275 W. Hospitality Lane, Suite #100
San Bernardino, CA 92408
Phone: 909-890-3700
Fax: 909-890-3770
Email: cadd@designwesteng.com

DESIGN WEST ENGINEERING
MECHANICAL • ELECTRICAL • ENERGY CONSULTANTS

Seal:

REGISTERED PROFESSIONAL ENGINEER
LEONARD P. MAYER
No. E19480
EXP. 6-30-2023
ELECTRICAL
STATE OF CALIFORNIA

1-800-422-4133
DIGALERT
UNDERGROUND SERVICE ALERT OF SOUTHERN CALIFORNIA

ATTENTION IS DIRECTED TO THE POSSIBLE EXISTENCE OF UNDERGROUND FACILITIES NOT KNOWN OR IN A LOCATION DIFFERENT FROM THAT WHICH IS SHOWN ON THE PLANS OR IN THE SPECIAL PROVISIONS. THE CONTRACTOR SHALL TAKE STEPS TO ASCERTAIN THE EXACT LOCATION OF ALL UNDERGROUND FACILITIES PRIOR TO DOING WORK THAT MAY DAMAGE SUCH FACILITIES OR INTERFERE WITH THEIR SERVICE.

BEFORE EXCAVATING, THE CONTRACTOR SHALL VERIFY THE LOCATION OF UNDERGROUND UTILITIES BY CONTRACTING UNDERGROUND SERVICE ALERT AT 1-(800)422-4133.

Revisions:

No.	Date	Revisions	By

Project :
JACK HAMMETT SPORTS COMPLEX
2750 Fairview Rd.
Owner:
City of Costa Mesa

Project No :	
Drawn By :	RM
Checked By :	RM
Date :	FEB 2019
Scale :	AS SHOWN

Drawing Title :
POWER & LTG FLOOR PLAN - STORAGE #1

Drawing No :
E-2.1

R:_PROJECT\2019\19-249 JACK HAMMET SPORTS PARK\16-209 E-ELEC\N - 2021-09-28 - LONNIE BUTLER

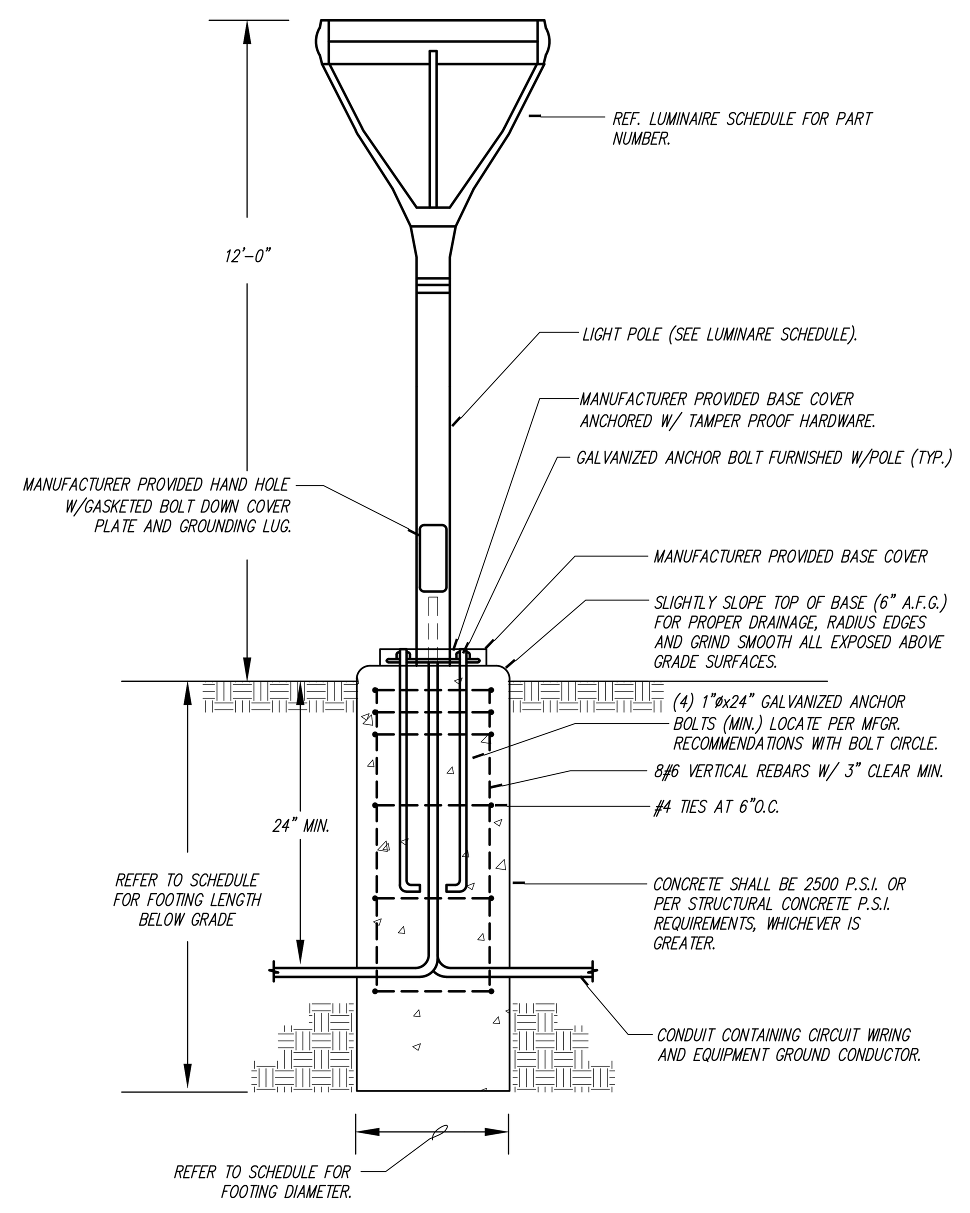

POLETOP FOOTING SCHEDULE

POLE HEIGHT	FOOTING DEPTH BELOW GRADE	FOOTING DIAMETER	FOOTING HEIGHT ABOVE GRADE
0'-0" UP TO 15'-0"	3'-0"	1'-6"	2'-6"

GENERAL NOTES:

1. GROUND POLE TO GROUND CONDUCTORS IN CONDUITS VIA GROUND BUSHING..
2. REFER TO ARCHITECTURAL FOR FINAL SITE FIXTURE LOCATIONS.
3. LOCATE ALL SITE POLETOP FIXTURES SO THAT THEY LINE UP WITH THE NEAREST PARKING STRIPE.
4. MANUFACTURERS RECOMMENDATIONS SHALL SUPERCEDE THIS DETAIL.
5. ALL POLE LIGHTING LOCATED IN LANDSCAPING AREA SHALL HAVE FOOTINGS BELOW GRADE.

ABOVE GRADE POLETOP LIGHTING | 9

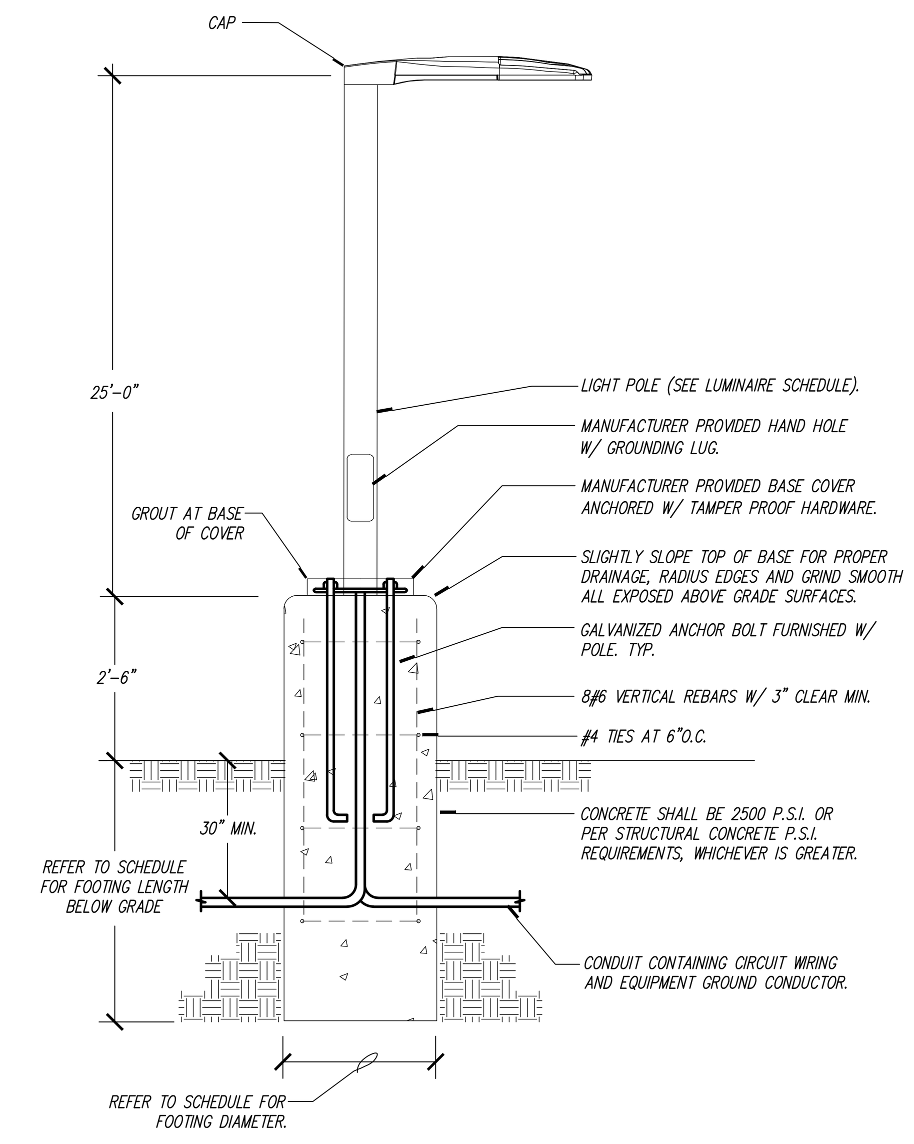

POLETOP FOOTING SCHEDULE

POLE HEIGHT	FOOTING DEPTH BELOW GRADE	FOOTING DIAMETER	FOOTING HEIGHT ABOVE GRADE
25'-1" UP TO 30'-0"	5'-0"	2'-6"	2'-6"

GENERAL NOTES:

1. GROUND POLE TO GROUND CONDUCTORS IN CONDUITS.
2. REFER TO ARCHITECTURAL FOR FINAL SITE FIXTURE LOCATIONS. LOCATE ALL SITE POLETOP FIXTURES SO THAT THEY LINE UP WITH THE NEAREST PARKING STRIPE.
3. MANUFACTURERS RECOMMENDATIONS SHALL SUPERCEDE THIS DETAIL.

ABOVE GRADE POLETOP LIGHTING | 8

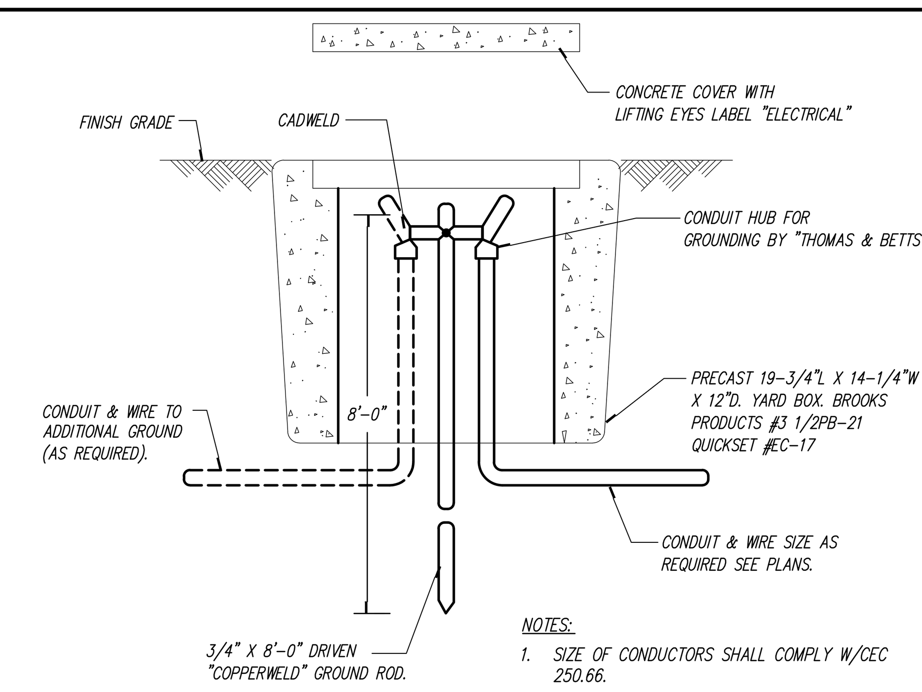

NOTES:

1. SIZE OF CONDUCTORS SHALL COMPLY W/CEC 250.66.
2. CHECK RESISTANCE TO GROUND. IF RESISTANCE EXCEEDS 25 OHMS, INSTALL ADDITIONAL GROUND RODS W/CONDUCTORS AS SHOWN. SEPARATE AT LEAST 6'-0" UNTIL RESISTANCE IS REDUCED TO 25 OHMS OR LESS (CEC 250.56)

GROUND ROD DETAIL | 5

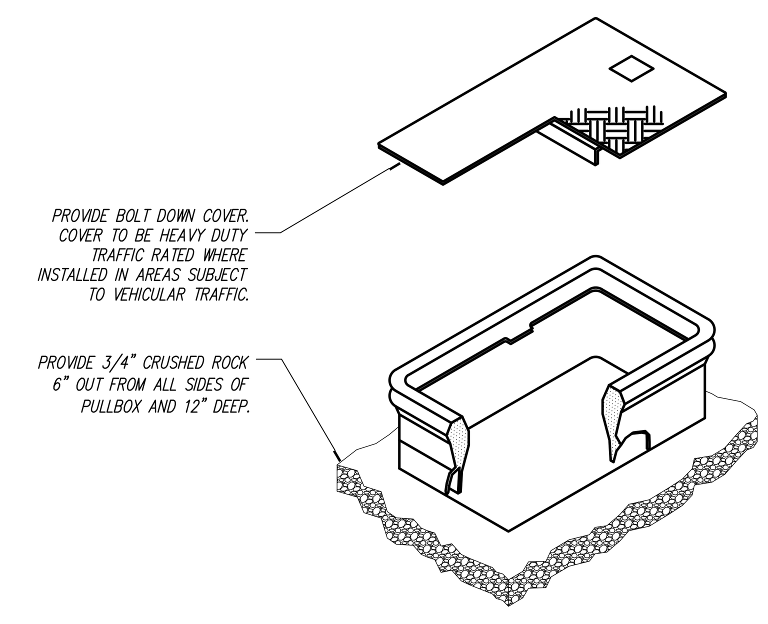

GENERAL NOTES:

1. PULLBOX TO BE SIZED PER NEC, U.O.N.
2. PROVIDE COVER LABELED WITH "LIGHTING" DESIGNATION.

TYPICAL PULLBOX INSTALLATION | 1

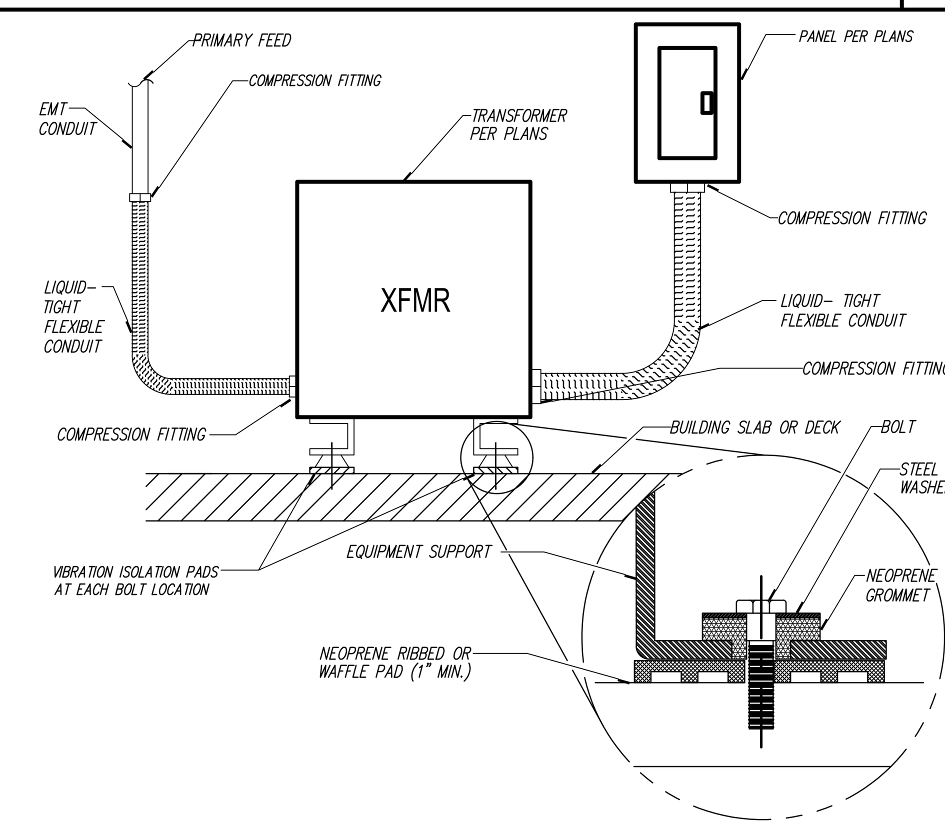

TYPICAL TRANSFORMER VIBRATION ISOLATION | 6

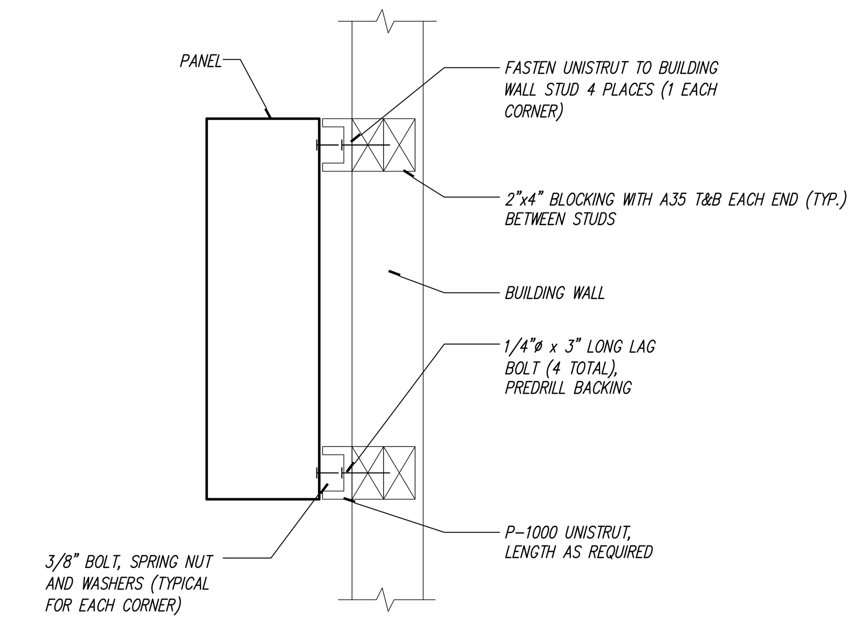

SURFACE MOUNTED PANEL | 2

- | 10

- | 11

GENERAL NOTES

1. PROVIDE A COMPLETE AND OPERABLE LIGHTING CONTROL SYSTEM AS SHOWN. CONTRACTOR IS TO PROVIDE ALL REQUIRED EQUIPMENT, HARDWARE, SOFTWARE, SWITCHES, OCCUPANCY SENSORS, ETC. FOR A COMPLETE AND TITLE 24 APPROVED CERTIFICATION.
2. CABLE RUNS ARE CONTINUOUS BETWEEN CONNECTED DEVICES, NO SPLICING ALLOWED.

KEY NOTES

(1) HUBBELL AUTOMATION #CX-08-2-S-08-2N-M. LIGHTING CONTROL PANEL SHOWN IS TO BE CEC CERTIFIED. THE NETWORK CLOCK (DTC) IS TO BE ASTRONOMICAL.

(2) PROVIDE NON-SWITCHED 'HOT' POWER WIRE ROUTED AROUND LIGHTING CONTROL PANEL TO BATTERY PACK CHARGING/SENSOR IN FIXTURE WHERE APPLICABLE.

(3) VERIFY OVERRIDE SWITCH LOCATIONS WITH ARCHITECT. VERIFY QUANTITY, LAYOUT, AND ORIENTATION WITH PLANS. SWITCHES SHALL BE COMPATIBLE WITH LIGHTING CONTROL SYSTEM. CONFIRM DEVICE FINISHES AND ALL SWITCH BUTTON ENGRAVINGS WITH THE OWNER REPRESENTATIVE PRIOR TO ORDERING.

(4) TYPICAL ELECTRICAL PANEL SHOWN. REFER TO SINGLE LINE DIAGRAM AND PANEL SCHEDULES FOR ALL LIGHTING CIRCUITS TO BE CONTROLLED.

(5) CONTROL POWER: 1 AMP, 120VAC -277VAC. CONSTANT HOT DEDICATED SOURCE. IF CONTROL IS REQUIRED UNDER EMERGENCY CONDITION, POWER SHOULD BE PROVIDED TO THE CONTROL PROCESSOR IN BOTH NORMAL AND EMERGENCY CONDITIONS.

(6) REFER TO RELAY AND ZONE SCHEDULES FOR QUANTITY OF RELAYS AND RELAY TYPES, AND ASSOCIATED FEED AND LOAD CIRCUIT INFORMATION.

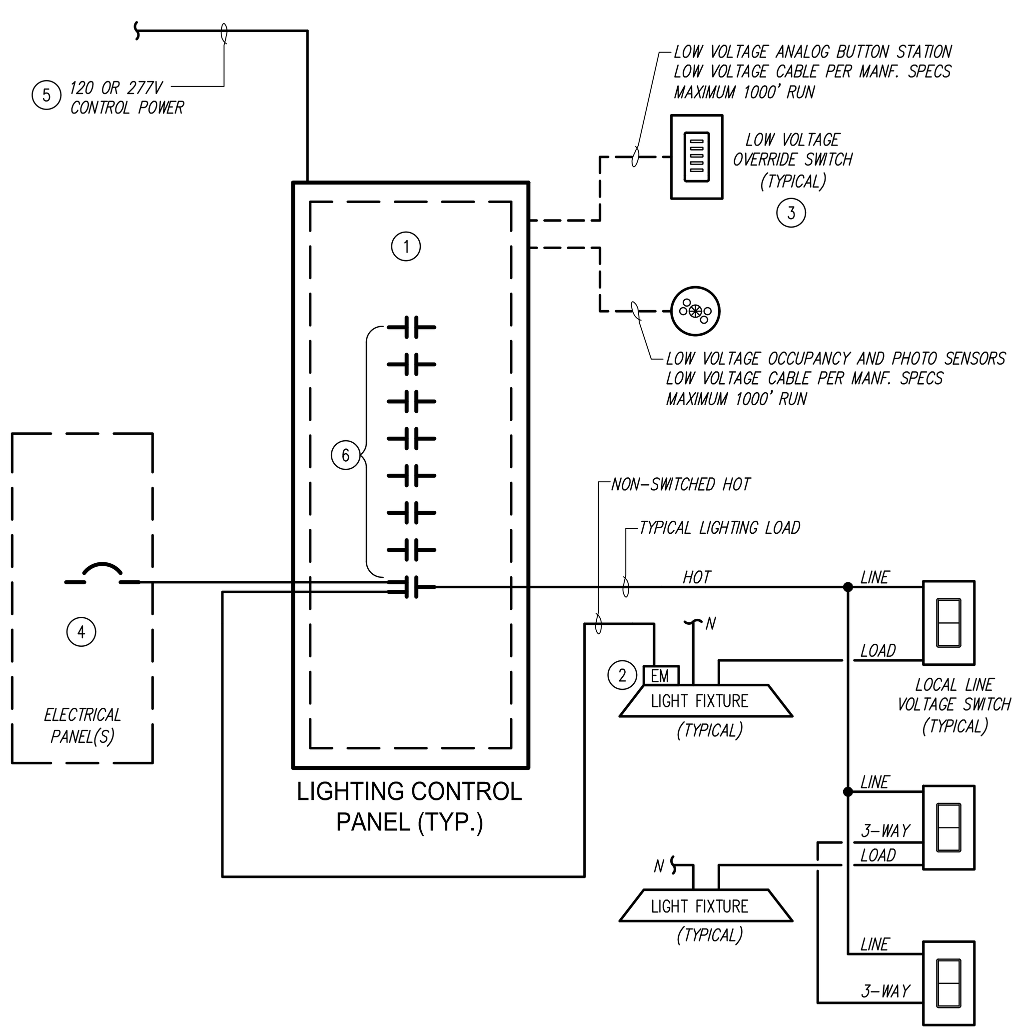

LCP1 - RELAY SCHEDULE

RELAY	ZONE	CIRCUIT	VOLTS	NOTES
R1	A	P1-1	120	INTERIOR LIGHTS
R2	B	P1-6	120	EXTERIOR LIGHTS
R3	-	-	-	-
R4	-	-	-	-
R5	-	-	-	-
R6	-	-	-	-
R7	-	-	-	-
R8	-	-	-	-

LIGHTING CONTROL WIRING DIAGRAM | 7

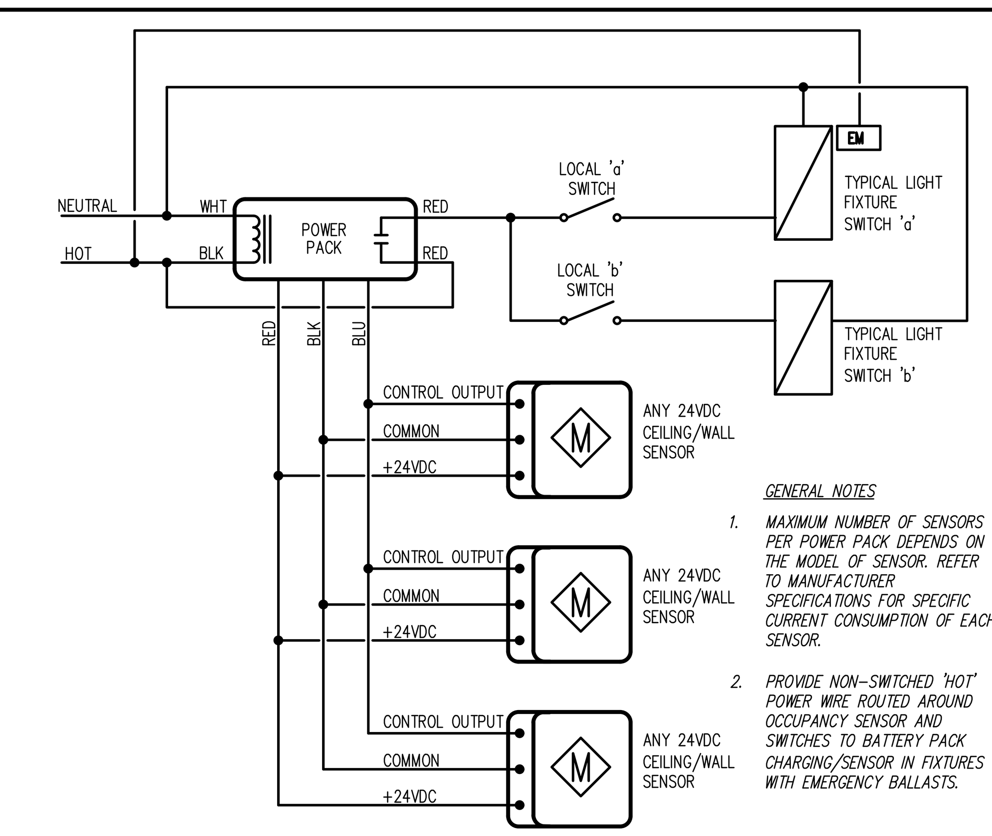

GENERAL NOTES

1. MAXIMUM NUMBER OF SENSORS PER POWER PACK DEPENDS ON THE MODEL OF SENSOR. REFER TO MANUFACTURER SPECIFICATIONS FOR SPECIFIC CURRENT CONSUMPTION OF EACH SENSOR.
2. PROVIDE NON-SWITCHED 'HOT' POWER WIRE ROUTED AROUND OCCUPANCY SENSOR AND SWITCHES TO BATTERY PACK CHARGING/SENSOR IN FIXTURES WITH EMERGENCY BALLASTS.

CEILING OCCUPANCY SENSOR WIRING | 3

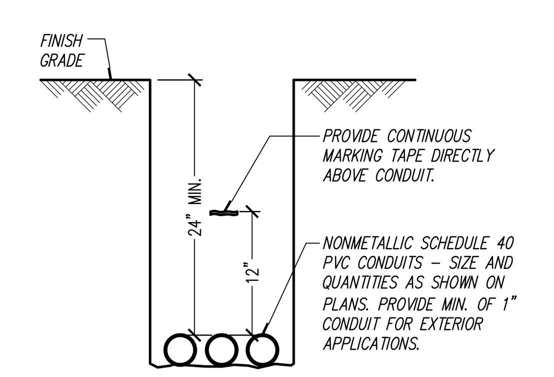

GENERAL NOTES:

1. PLACE CONDUIT IN TRENCH, FILL, AND COMPACT TO 90%. REPAIR AREA TO MATCH SURROUNDING. BACK FILL IS TO BE FREE OF LARGE ROCK, PAVING MATERIALS, ETC., THAT MAY CAUSE PHYSICAL DAMAGE TO CONDUIT.
2. PROVIDE 30" MINIMUM COVER WHERE CONDUIT IS PLACED UNDER STREETS, HIGHWAYS, ROADS, ALLEYS, DRIVEWAYS, AND PARKING LOTS.

CONDUIT BURIAL | 4

R:_PROJECT\2019\19-249 JACK HAMMET SPORTS PARK\16-209 E-DETAILS - 2021-09-28 - LONNIE BUTLER

Landscape Architect:

DVD
David Volz Design
Landscape Architecture & Park Planning

Costa Mesa Office:
151 Kalmus Drive, Suite M8
Costa Mesa, CA 92626
Phone: (714) 641-1300
Fax: (714) 641-1323

e-mail: drawings@dvolzdesign.com
www.dvolzdesign.com

Subconsultant:

275 W. Hospitality Lane, Suite #100
San Bernardino, CA 92408
Phone: 909-890-3700
Fax: 909-890-3770
Email: cadd@designwesteng.com

DESIGN WEST ENGINEERING
MECHANICAL • ELECTRICAL • ENERGY CONSULTANTS

Seal:

REGISTERED PROFESSIONAL ENGINEER LEONARD P. MATA No. E19480 EXP. 6-30-2023 ELECTRICAL STATE OF CALIFORNIA

1-800-422-4133
DIGALERT

UNDERGROUND SERVICE ALERT OF SOUTHERN CALIFORNIA

ATTENTION IS DIRECTED TO THE POSSIBLE EXISTENCE OF UNDERGROUND FACILITIES NOT KNOWN OR IN A LOCATION DIFFERENT FROM THAT WHICH IS SHOWN ON THE PLANS OR IN THE SPECIAL PROVISIONS. THE CONTRACTOR SHALL TAKE STEPS TO ASCERTAIN THE EXACT LOCATION OF ALL UNDERGROUND FACILITIES PRIOR TO DOING WORK THAT MAY DAMAGE SUCH FACILITIES OR INTERFERE WITH THEIR SERVICE.

BEFORE EXCAVATING, THE CONTRACTOR SHALL VERIFY THE LOCATION OF UNDERGROUND UTILITIES BY CONTRACTING UNDERGROUND SERVICE ALERT AT 1-(800)-422-4133.

Revisions:

No.	Date	Revisions	By

Project :
JACK HAMMETT SPORTS COMPLEX
2750 Fairview Rd.

Owner:
City of Costa Mesa

Project No :
Drawn By : RM
Checked By : RM
Date : FEB 2019
Scale : AS SHOWN

Drawing Title :
ELECTRICAL DETAILS

Drawing No :
E-3.1

19-249